PLEASANT PRAIRIE PLAN COMMISSION MEETING
VILLAGE HALL AUDITORIUM
9915 39th AVENUE
PLEASANT PRAIRIE, WISCONSIN
6:00 P.M.
AUGUST 10, 2015

AGENDA

1. Call to Order.
2. Roll Call.
3. Consider the minutes of the July 27, 2015 Plan Commission meetings.
4. Correspondence.
5. Citizen Comments.
6. New Business.

   A. **PUBLIC HEARING AND CONSIDERATION OF A PLAN COMMISSION RESOLUTION #15-15 FOR AN AMENDMENT TO THE VILLAGE COMPREHENSIVE PLAN** at the request of Jonah Hetland of Bear Development LLC, agent for Creekside PP, LLC, the owner, to amend a portion of the Whittier Creek Neighborhood Plan 32 of Appendix 9-3 for the Bear Development, LLC properties as a result of the proposed development of the remainder of the Creekside Crossing Development.

   B. **PUBLIC HEARING AND CONSIDERATION OF A CONCEPTUAL PLAN** for the request of Jonah Hetland of Bear Development LLC, agent for Creekside PP, LLC, the owner of the vacant properties north of the Creekside Crossing development for the development of 64 single family lots and one (1) two family lot on the remainder of the original Creekside Crossing development area.

   C. Consider the request of Jonah Hetland of Bear Development LLC, agent for Creekside PP, LLC, the owner, for approval of a **Certified Survey Map** to create one (1) two family lot at the northwest corner of 90th Street and 62nd Avenue.

   D. **PUBLIC HEARING AND CONSIDERATION OF A ZONING MAP AMENDMENT** for the request of Jonah Hetland of Bear Development LLC, agent for Creekside PP, LLC, the owner, to rezone the one (1) two family lot to be created at the northwest corner of 90th Street and 62nd Avenue into the R-8, Two-Family Residential District for the development of one (1) two family dwelling unit.

   E. **PUBLIC HEARING AND CONSIDERATION OF A FLOODPLAIN BOUNDARY ADJUSTMENT** for the request of Matt Carey. P.E., with Pinnacle Engineering Group, agent for Route 165, LLC owner of the property generally located at the 11200 block of 120th Avenue (West Frontage Road) to remove 3,519 cubic yards from the 100-year floodplain and to create 4,963 cubic yards of 100-year floodplain to compensate for the 100-floodplain begin filled for the an office building and site improvements for a Uline headquarters office building (H2).

   F. **PUBLIC HEARING AND CONSIDERATION OF ZONING MAP AND ZONING TEXT AMENDMENTS** for the following requests of Matt Carey, P.E. with Pinnacle Engineering Group, agent for Route 165, LLC owner of the

property located at 12575 Uline Drive for a Zoning Map Amendment and Zoning Text Amendments: 1) to rezone the portion of the property being removed from the 100-year floodplain from the FPO, Floodplain Overlay District; 2) to rezone the portion of the property wherein 100-year floodplain was created into the FPO District; 3) to amend Section 420-131 I (1) (a) to specifically reference the change to the official floodplain maps and studies; and 4) to amend the Uline Corporate Campus Planned Unit Development in Appendix C of Chapter 420 of the Village Zoning Ordinance to allow for the construction of the Uline Conference Center with a size not to exceed 25,000 square feet in area and 45 feet in height.

G. Consider the request of Matt Carey, P.E. with Pinnacle Engineering Group, agent for Route 165, LLC owner of the property located at 12575 Uline Drive for approval of the **Final Site and Operational Plans** for the construction of the Uline Conference Center.

H. Consider the request of Ralph Nudi, agent for the owner RMN Properties, Inc. for approval of a **Certified Survey Map** to subdivide the property located at 11206 8th Avenue into two (2) parcels.

I. Consider the request of Alan and Michelle Deloria for approval of a **Lot Line Adjustment** between their property located at 3464 93rd Street and the vacant property to the east and north.

J. Consider **Plan Commission Resolution #15-16** to initiate a **Comprehensive Plan Amendment and a Zoning Map Amendment** for several properties on Sheridan Road.

7. Adjourn.

It is possible that members and possibly a quorum of members of other governmental bodies of the municipality may be in attendance in the above stated meeting to gather information; no action will be taken by any other governmental body except the governing body noticed above.

The Village Hall is handicapped accessible. If you have other special needs, please contact the Village Clerk, 9915 39th Avenue, Pleasant Prairie, WI (262) 694-1400.

PLEASANT PRAIRIE PLAN COMMISSION MEETING
VILLAGE HALL AUDITORIUM
9915 39TH AVENUE
PLEASANT PRAIRIE, WISCONSIN
6:00 P.M.
July 27, 2015

A regular meeting for the Pleasant Prairie Plan Commission convened at 6:00 p.m. on July 27, 2015. Those in attendance were Thomas Terwall; Michael Serpe; Wayne Koessl; Jim Bandura; Judy Juliana; and Bill Stoebig (Alternate #1). Donald Hackbarth; Deb Skarda (Alternate #2); and John Braig were excused. Also in attendance were Tom Shircel, Assistant Administrator; Jean Werbie-Harris, Community Development Director; and Peggy Herrick, Assistant Zoning Administrator.

1. CALL TO ORDER.

2. ROLL CALL.

3. CONSIDER THE MINUTES OF THE JULY 13, 2015 PLAN COMMISSION MEETINGS.

Judy Juliana:

Move to approve.

Jim Bandura:

Second.

Tom Terwall:

MOVED BY JUDY JULIANA AND SECONDED BY JIM BANDURA TO APPROVE THE MINUTES OF THE JULY 13, 2015 PLAN COMMISSION MEETING AS PRESENTED IN WRITTEN FORM. ALL IN FAVOR SIGNIFY BY SAYING AYE.

Voices:

Aye.

Tom Terwall:

Opposed? So ordered.

4. CORRESPONDENCE.

5. CITIZEN COMMENTS.

Tom Terwall:

If you're here for an item that appears on the agenda we'd ask you to hold your comments until that item comes up and we can include your comments as a part of the official record. However,

if you're here and want to raise an issue that's not on the agenda now would be your opportunity to do so. We'd ask you to step to the microphone and begin by giving us your name and address. Anybody wishing to speak under citizens' comments?

6. NEW BUSINESS

A. PUBLIC HEARING AND CONSIDERATION OF PLAN COMMISSION RESOLUTION #15-14 to consider the request of Bill Morris, agent for the owner, AMB Durrani Bawani, LLC for the following amendments to the Village of Pleasant Prairie 2035 Comprehensive Plan related to the proposed development of an office building on the property generally located north of STH 50 and west of 91st Avenue: 1) to amend the Village 2035 Land Use Plan Map 9.9 to remove the urban reserve land use designation from the property to ensure that both the Zoning Map and the Comprehensive Land Use Plan are consistent; and 2) to update Appendix 10-3 of the Village of Pleasant Prairie, Wisconsin 2035 Comprehensive Plan to reflect the above noted changes to the 2035 Land Use Plan Map 9.9.

Jean Werbie-Harris:

Mr. Chairman and members of the Plan Commission and the audience, Item A is a public hearing and consideration of Plan Commission Resolution 15-14, and this is to consider the request of Bill Morris, agent for the owner, AMB Durrani Bawani, LLC for the following amendments to the Village of Pleasant prairie 2035 Comprehensive Plan related to the proposed development of an office building on the property generally located north of Highway 50 and west of 91st Avenue. First to amend the Village 2035 Land Use Plan Map 9.9 to remove the urban reserve land use designation from the property to ensure that both the Zoning Map and the Comprehensive Land Use Plan Map are consistent; and, two, to update Appendix 10-3 of the Village of Pleasant Prairie, Wisconsin 2035 Comprehensive Plan to reflect the above noted changes to the 2035 Land Use Plan Map 9.9.

On July 20, 2015, the Village Board rezoned the property generally located north of Highway 50 and west of 91st Avenue from the B-2 UHO which is Community Business District with an Urban Land Holding Overlay District to the B-2 PUD, Community Business District with a Planned Unit Development Overlay District for the proposed development of an office building for Dr. Durrani. The zoning approval was contingent upon the Village's approval of the proposed amendments to the Comprehensive Plan. And so those amendments are before you this evening.

Again, the first is to amend the Comprehensive Land Use Plan Map 9.9 to remove the Urban Reserve Land Use designation. Again, this is necessary for this land to develop. The site will be serviced by municipal sanitary sewer from an extension of sewer in Highway 50 from 91st Avenue. Municipal water will be provided in the private roadway or driveway from 91st Avenue over to the Dr. Durrani property. So both municipal sewer and water will be provided. There will be no direct access from this site directly to Highway 50. There will be a private access road, and easements will reflect that access easement across and through and over the adjacent property. So those are the two amendments. Again, the second is just to reflect that change on the land use plan map. This is a matter for public hearing, and I'd like to continue the hearing at this time.

Tom Terwall:

Anybody wishing to speak on this matter? Is there anybody wishing to speak? Anybody wishing to speak? Seeing none I'll open it up to comments and questions from Commissioners and staff.

Michael Serpe:

Goddard School is here, and all the grading issues that's all been addressed and resolved and ready to go?

Jean Werbie-Harris:

My understanding is we are continuing to work through the process. I just spoke with Dr. Durrani's attorney about an hour ago, and he is finalizing the easement documentation. And he's waiting for some legal descriptions and exhibits from the engineer for the project. And then all of these documents will be forwarded to Sarah and her attorney for their review. Again, we're still at the preliminary site and operational plan stage. They have not submitted anything for final reviews or approvals. So we want to get those documents to them this week.

And I did mention to the attorney some of the additional questions that had come up with respect to from the neighbors wanting to see some additional landscaping directly north of where the parking lot is located as well as along that access driveway. And so that would require a landscaping easement as well in order to plant the additional trees and plants. So that's one thing that needs to be worked out. And I'm not sure if the engineer for Dr. Durrani had an opportunity to speak with Sarah or her attorney or anyone regarding the grading and such. We knew it was a concern and we brought it up, but we haven't met with the engineer yet or seen any revised plans. The engineers is here in the audience so I'm not sure if you have any questions directly to him Mr. Eberle I'm sure would be happy to come up.

Mark Eberle:

Mark Eberle, Nielsen Madsen and Barber, 1458 Horizon Boulevard. Yeah, we are still working through those final plan details, the easements, legal descriptions. Once we have it all assembled into one package we do need to sit down with Sarah at Goddard School and work through those agreements.

Michael Serpe:

You're confident that's going to be okay?

Mark Eberle:

Yeah, I believe -- I mean everyone worked really well when we got that whole project pulled together for out there. And I expect we can achieve the same thing out here for Dr. Durrani. Thank you.

Tom Terwall:

Anybody else?

Jean Werbie-Harris:

I have a question. Have you set up a meeting with Sarah? Are you planning to set up a meeting, or are you going to set it up here at the Village Hall for us to sit down and kind of go through things with here. How did you want to handle it?

Mark Eberle:

I just mentioned to Sarah just a couple minutes before we started that we are still pulling the documents together and we have not discussed setting up a meeting yet. But we can probably do that right now.

Jean Werbie-Harris:

And if you'd like the Village to be there that's fine. And if you want to meet with her individually or with her attorney or her engineer and people you could do that, too.

Mark Eberle:

Okay, thank you.

Wayne Koessl:

Through the Chair to staff, if we approve this tonight as the Plan Commission and send it to the Board permits are not to be issued until all those issues are resolved?

Jean Werbie-Harris:

Oh, absolutely. I mean we're still at preliminary site and operational plan. So they still have to submit all of those final details. I think we had maybe 15, 20 pages of comments. The easements, the revised plans, all of those still have to come into the staff for review and go back to the Plan Commission.

Michael Serpe:

Tom, I'd move approval of Resolution 15-14.

Jim Bandura:

Second.

Tom Terwall:

IT'S BEEN MOVED BY MIKE SERPE AND SECONDED BY JIM BANDURA TO ADOPT RESOLUTION 15-14 AND SEND A FAVORABLE RECOMMENDATION TO THE VILLAGE BOARD. ALL IN FAVOR SIGNIFY BY SAYING AYE.

Voices:

Aye.

Tom Terwall:

Opposed? So ordered.

B. Consider the request of Lance Skala, agent for Centerpoint Wispark Land Company, LLC, owners, for approval of a Site and Operational Plan for a 204,387 square foot speculative warehouse and distribution building on the property located at the southwest corner of STH 165 and CTH H in LakeView Corporate Park.

Jean Werbie-Harris:

Mr. Chairman and members of the Plan Commission, this is request of Lance Skala, agent for Centerpoint Wispark Land Company, LLC, owners, for the approval of site and operational plans for a 204,387 square foot speculative warehouse and distribution building on the property located at the southwest corner of Highway 165 and County Highway H in the LakeView Corporate Park.

Specifically, the petitioner is requesting then to develop the 12 acre vacant property located at the southwest corner of Highway 165 and Highway H in the LakeView Corporate Park. This would be with a 204,387 square foot speculative warehouse and distribution building to be known as LakeView 17. At this time there is no identified user for this speculative building. As information, any tenant that proposes to use or occupy 50 percent or more of this speculative building will require site and operational plan approval from the Plan Commission. Also, depending on the use proposed a conditional use permit along with site and operational plan approval from the Plan Commission would also be required.

The property is zoned M-2, General Manufacturing District. The M-2 District requires that the building meet the following minimum setback requirements: A street setback of 65 feet from both Highway 165 and County Highway H; a side setback of 45 feet for all buildings; and a wetland setback of 25 feet minimum. The location of the parking lots, maneuvering lanes and the fire access lanes shall be set back a minimum of 20 feet to the property lines and 25 feet from the wetlands.

The M-2 District requires a minimum of 25 percent of the site be open space, and the site provides 25 percent open space. There will be no access to Highway 165, and two access points are being provided to County Trunk Highway H. The northern access point and Peggy is going to show those to you, is a right in/right out only. And then the southern access point is a shared access point with L&M Corrugated and, again, that's to the south. The southern access when originally constructed was planned to be a shared access between the two sites.

All parking areas and maneuvering lanes, fire lanes, including the truck court shall be improved with concrete vertical curb and gutter. The plan includes 203 parking spaces including 7 handicapped accessible spaces. The truck court faces south and provides for 20 dock locations with an additional future 18 doc door locations. Pursuant to the Village zoning ordinance, the minimum onsite parking spaces for a manufacturing use would require 5 spaces plus 1 space per

employee on the largest shift and the required number of handicapped accessible parking spaces pursuant to the State code.

The minimum onsite parking spaces for a warehouse or a distribution center is one space for every two employees during any 12 hour period. And the required number of handicapped accessible parking spaces, again, pursuant to the State code. At this time the proposed use is unknown. Adequate onsite parking shall be reverified at such time as they do have a user for the building.

Centerpoint is in the process of selecting a general contractor for the project. The initial grading on the site has an anticipated start of this fall of 2015. The anticipated construction completion date is sometime later summer of 2016. With that I'd like to indicate that there are representatives here from Centerpoint if you have any questions. If not this is not a public hearing, so we can have any discussion at this point.

Tom Terwall:

Would the representatives care to make any additional comments?

[Inaudible]

Jean Werbie-Harris:

Lance, you need to come up to the microphone.

Lance Skala:

Lance Skala, Centerpoint properties. We have representatives here from JSD Professional Services and PID along with Ed Harrington with Centerpoint Properties. And if you have any questions we'd be more than happy to answer them.

Tom Terwall:

Thank you. Comments or questions of staff?

Michael Serpe:

Jean, could you put the photograph or the drawing of the building up there please? Warner, I want to commend you on a unique design.

Jean Werbie-Harris:

Mr. Chairman, I don't have my glasses on so the sentence is correct in the staff memo. At the time the proposed use is known adequate onsite parking shall be reverified. So it is correct in the staff memo, I just couldn't read it.

Tom Terwall:

Any other comments or questions?

Wayne Koessl:

Mr. Chairman, if there are not further questions I move approval subject to the comments and conditions laid out by the Village staff as of the 27th of July, 2015 and send it onto the Village Board.

Jim Bandura:

Second.

Tom Terwall:

IT'S BEEN MOVED BY WAYNE KOESSL AND SECONDED BY JIM BANDURA TO APPROVE THE SITE AND OPERATIONAL PLAN SUBJECT TO THE TERMS AND CONDITIONS OUTLINED IN THE STAFF MEMORANDUM. ALL IN FAVOR SIGNIFY BY SAYING AYE.

Voice:

Aye.

Tom Terwall:

Opposed? So ordered.

7. ADJOURN.

Wayne Koessl:

I'll move adjournment.

Judy Juliana:

Second.

Tom Terwall:

All in favor aye.

Voices:

Aye.

Tom Terwall:

Opposed? We stand adjourned.

Meeting Adjourned: 6:15 p.m.

A. **PUBLIC HEARING AND CONSIDERATION OF A PLAN COMMISSION RESOLUTION #15-15 FOR AN AMENDMENT TO THE VILLAGE COMPREHENSIVE PLAN** at the request of Jonah Hetland of Bear Development LLC, agent for Creekside PP, LLC, the owner, to amend a portion of the Whittier Creek Neighborhood Plan 32 of Appendix 9-3 for the properties as a result of the proposed development of the remainder of the Creekside Crossing Development.

Recommendation: Village staff recommends that the Plan Commission send a favorable recommendation to the Village Board to conditionally approve the amendment to the Comprehensive Plan (Neighborhood Plan) subject to the comments and conditions of the August 10, 2015 Village Staff Report.

B. **PUBLIC HEARING AND CONSIDERATION OF A CONCEPTUAL PLAN** for the request of Jonah Hetland of Bear Development LLC, agent for Creekside PP, LLC, the owner of the vacant properties north of the Creekside Crossing development for the development of 64 single family lots and one (1) two family lot on the remainder of the original Creekside Crossing development area.

Recommendation: Village staff recommends that the Plan Commission send a favorable recommendation to the Village Board to conditionally approve the Conceptual Plan subject to the comments and conditions of the August 10, 2015 Village Staff Report.

C. Consider the request of Jonah Hetland of Bear Development LLC, agent for Creekside PP, LLC, the owner, for approval of a **Certified Survey Map** to create one (1) two family lot to be created at the northwest corner of 90th Street and 62nd Avenue.

Recommendation: Village staff recommends that the Plan Commission table until the Condominium is approved by the existing Creekside Crossing Condominium Association so Village staff can prepare all the dedication and easement language and the Floodplain Boundary Adjustment is completed and approval from FEMA is obtained.

D. **PUBLIC HEARING AND CONSIDERATION OF A ZONING MAP AMENDMENT** for the request of Jonah Hetland of Bear Development LLC, agent for Creekside PP, LLC, the owner, to rezone the one (1) two family lot to be created at the northwest corner of 90th Street and 62nd Avenue into the R-8, Two-Family Residential District for the development of one (1) two family dwelling unit.

Recommendation: Village staff recommends that the Plan Commission table this request until the Floodplain Boundary Adjustment is completed and approval from FEMA is obtained.

.

VILLAGE STAFF REPORT OF AUGUST 10, 2015

CONSIDERATION OF A PLAN COMMISSION RESOLUTION #15-15 FOR AN AMENDMENT TO THE VILLAGE COMPREHENSIVE PLAN the request of Jonah Hetland of Bear Development LLC, agent for Creekside PP, LLC, the owner, to amend a portion of the Whittier Creek Neighborhood Plan 32 of Appendix 9-3 for the properties as a result of the proposed development of the remainder of the Creekside Crossing Development.

CONSIDERATION OF A CONCEPTUAL PLAN for the request of Jonah Hetland of Bear Development LLC, agent for Creekside PP, LLC, the owner of the vacant properties north of the Creekside Crossing development for the development of 64 single family lots and one (1) two family lot on the remainder of the original Creekside Crossing development area.

Consider the request of Jonah Hetland of Bear Development LLC, agent for Creekside PP, LLC, the owner, for approval of a **Certified Survey Map** to create one (1) two family lot to be created at the northwest corner of 90th Street and 62nd Avenue.

CONSIDERATION OF A ZONING MAP AMENDMENT for the request of Jonah Hetland of Bear Development LLC, agent for Creekside PP, LLC, the owner, to rezone the one (1) two family lot to be created at the northwest corner of 90th Street and 62nd Avenue into the R-8, Two-Family Residential District for the development of one (1) two family dwelling unit.

The petitioner is requesting several approvals to develop the remaining vacant land north and west of the Creekside Subdivision and the Creekside Crossing Subdivision and Condominium development adjacent to 89th, 90th and 91st Streets, 90th Place, 62nd Avenue, and Creekside Circle in the Village. The items being considered at the meeting for approval include an amendment to the Comprehensive Plan (Whittier Creek Neighborhood Plan), a Conceptual Plan, a Certified Survey Map and a Zoning Map Amendment.

Background:

The Creekside Crossing condominium (including 8 unit, 4 unit and 2 unit buildings) and single family residential development were initially developed in several phases by Mastercraft Builders from 2005-2010. Portions of the development were then sold to other contractors and units were constructed from 2010-2014. The original development anticipated 24 single family lots; 36 2-unit condominium buildings, 16 4-unit condominium buildings and 19 8-unit condominium buildings. All of the single family lots have since been developed and all of the condominium units with the exception of two 8-unit buildings and two- 2-unit buildings have been built within the existing platted condominium area. The undeveloped land proposed to be developed for condominium purposes would have included a total of 158 additional condominium units (11-8 unit buildings, 5-4 unit buildings and 25-2 unit buildings).

Due to the recession, this area had remained vacant for several years until its recent purchase by Creekside PP, LLC for development purposes. The new Developer is proposing to complete the Creekside project by downzoning the remaining land from multi-family zoning to a single family zoning by creating 64 single family lots and one (1) 2-family lot.

The Developer is proposing to complete the floodplain boundary adjustment work as was originally proposed and to construct the underground public utilities and public roadways within 89th and 90th Streets, 91st Street, 90th Place, 62nd Avenue and Creekside Circle. A public park area will be developed on the south side of Creekside Circle adjacent to the Jerome Creek. A floodplain boundary adjustment, a large retention basin construction and a wetland enhancement project are also proposed. The Developer would like to begin grading and utility work in the fall of 2015.

COMPREHENSIVE PLAN AMENDMENT: The petitioner is requesting an amendment of a portion of the Whittier Creek Neighborhood Plan in Appendix 9-3 as a result of the proposed development of the remainder of the Creekside Crossing development (the project is referred to as Creekside Terrace).

The entire Whittier Creek Neighborhood is bounded by STH 31 (Green Bay Road) on the west, 85th Street on the north, Cooper Road on the east and 93rd Street on the south. This amendment is only for a portion of the southwest corner of this Neighborhood.

Neighborhood Plans, which are a component of the Village's Comprehensive Plan, are intended to provide the community with a means of reviewing the patterns of existing and probable future development in and around the area proposed for land development, evaluating access to the land development and the feasibility of developing certain land uses and lot layouts, roadways and parkways, open green spaces and preservation areas, schools, municipal facilities and municipal services to serve the neighborhood. The Neighborhood Plan sets forth a guide for future development when a willing landowner wishes to develop his land.

In accordance with the Village Comprehensive Plan, the Whittier Creek Neighborhood is classified as being within a Low-Medium Density Residential land use category having lot areas ranging from 12,000 square feet to 19,000 square feet or more per dwelling unit. This range allows for some areas of the Neighborhood to have larger lots while other areas to have smaller lots. See Plan Commission Resolution #15-15.

RESIDENTIAL DEVELOPMENT IN THE NEIGHBORHOOD: Approximately 345 acres of land (excluding existing and future rights-of-way, Government/Institutional, Transportation/Utilities, Public Park, 100-year floodplain and wetlands) within the Neighborhood are proposed to be developed as Residential. [The 345 acres of land includes approximately 16 acres of the other open space and approximately 12.6 acres of woodlands to be preserved as described above.].

There are 258 existing single family lots within the Neighborhood and these existing residential developments include: Whittier Heights Subdivision, Whittier Heights Addition #1, Whittier Heights Addition #2, Whittier Heights Addition #3, Wil-Char Subdivision, Creekside Crossing Subdivision, development on 91st Street and 63rd Avenues south of 100th Street; residential development along Cooper Road, 85th Street, Old Green Bay Road and 93rd Street. A total of 327 additional single family lots are proposed to be developed within the neighborhood.

There are 134 existing platted multi-family condominium units in the neighborhood known as Creekside Crossing Condominiums located north of 93rd Street between 63rd and 66th Avenue (of the 134 units, 2-8 unit buildings and 2-2 unit buildings have not been constructed to date) and six (6) existing multi-family condominium units located on Old Green Bay Road south of Jerome Creek and eight (8) two unit building locate on Old Green Bay Road north of Jerome Creek.

The Neighborhood Plan proposes a total of 585 single family lots and 150 multi-family units (2 or more units per building) for a total of 735 dwelling units (this is a reduction of 28 units from the current Whittier Creek Neighborhood Plan.

In accordance with the Village Comprehensive Plan, the overall net density for the Neighborhood is recommended to be within the Lower-Medium Density Residential land use category with the average lot area being between 12,000 square feet 18,999 square feet per dwelling unit. This allows for some areas of the Neighborhood to have larger lots while some areas have smaller lots. The net density of the Neighborhood as shown on the proposed Neighborhood Plan would be 20,447 square feet per dwelling unit. This density is lower than required by the Village Comprehensive Plan.

POPULATION PROJECTIONS FOR THE NEIGHBORHOOD: The vacant portions of this Neighborhood will not develop until the property owners wish to develop their land; which makes Neighborhood planning essential for the orderly growth of the community and establishes a framework as to how development should occur and, if and when it occurs. The Neighborhood Plan is a guide for property owners and developers—therefore the population will increase on an incremental basis as the Neighborhood develops over time.

Current population within the Neighborhood:

- 644 dwelling units
- 1,746 persons (which includes 395 school age children)

Projected population within the neighborhood is based on the total number of households proposed for this neighborhood when fully developed:

- 735 dwelling units
- 1,992 persons (which includes 450 school age children)

Based on the 2010 Census information for the Village of Pleasant Prairie, the average number of persons per household is 2.71 and school age children between the ages of 5 and 19 make up 22.6% of the population. The Village provides copies of proposed developments to the Kenosha Unified School District (KUSD) to assist in their long range planning. Pursuant to the information provided by the KUSD for Pleasant Prairie, 42% of the new dwelling units will have new students that will attend public schools, or a total of 390 students).

CONCEPTUAL PLAN: The petitioner is requesting approval of a Conceptual Plan to create 64 single family lots and one (1) 2-family lot for two condominium units.

SINGLE FAMILY RESIDENTIAL DEVELOPMENT: About 64.14 acres (2,794,133 square feet) are proposed to be developed into 64 single-family lots, one 2-unit condominium building and five (5) Outlots. The single family lots range in size from 12,005 square feet to 21,430 square feet per lot with the average lot size of 15,962 square feet. The lots shall be adjusted to meet the minimum requirements of the R-4.5 Urban Single Family Residential District, which requires each lot to be a minimum of 12,500 square feet with 80 feet of frontage (the frontage can be reduced to 45 feet on a curve or cul-de-sac). All lots shall have a lot depth of at least 125 feet. A majority of the lots abut up to open space, retention basins, wetlands, floodplain or woodlands.

A number of new streets are proposed to be developed with full public improvements including:

- 89th and 90th Streets;
- 90th Place;
- 91st Street (completed within the development) − and a rural roadway extending west;
- 62nd Avenue; and
- Creekside Circle.

CONDOMINIMUM DEVELOPMENT: The Developer is proposing to create one additional two-family condominium lot at the northwest corner of 90th Street and 62nd Avenue in the Creekside Terrace development. The Developer is willing and intends to cooperate in all respects with the Village and the Condominium Association to incorporate this new condominium into the existing Condominium and its referenced Declaration. As such the Developer is willing to have the new two unit building constructed in the same architecture, materials, style, height and colors as the existing adjacent two-family condominium units as reflected in the plans and details of which are on file with the Village. It is further the intent

of the Developer that the new two-unit building would be owner-occupied condominium units, which would comply with all of the Declarations, By-Laws and other requirements of the existing Condominium. That being said, cooperation will be needed from the existing Condominium Association Members/Condominium Board and its mortgage holders to amend the Condominium and incorporate this property into the Condominium to be governed by the Association. (See attached Developer Attorney Letter for a brief analysis).

OUTLOTS:

Outlot 1 is proposed to be dedicated (fee interest transfer) as common open space to the Creekside Terrace Homeowner's Association, Inc. The Outlot shall be labeled as "Outlot 1 Dedicated by the Developer to the Creekside Terrace Homeowner's Association, Inc. for Open Space, Wetland Preservation and Protection, Access and Maintenances Purposes". The wetland areas shall be separately delineated and identified. There shall also be an easement over this same area of Outlot 1 granted to the Village for the same Open Space, Wetland Preservation and Protection, Access and Maintenance Purposes.

Outlot 2 is proposed to be dedicated (fee interest transfer) to the Creekside Terrace Homeowner's Association, Inc. The Outlot shall be labeled as "Outlot 2 Dedicated by the Developer to the Creekside Terrace Homeowner's Association, Inc. for Open Space, Access and Maintenance Purposes". There shall also be an easement over this same area of Outlot 2 granted to the Village for the same Open Space, Access and Maintenance Purposes.

Outlot 3 is proposed to be dedicated (fee interest transfer) to the Creekside Terrace Homeowner's Association. The Outlot shall be labeled as "Outlot 3 Dedicated by the Developer to the Creekside Terrace Homeowner's Association, Inc. for Floodplain Preservation and Protection, Wetland Preservation and Protection, Access and Maintenance Purposes". The wetland areas shall be separately delineated. There shall also be an easement over this same area of Outlot 2 granted to the Village for the same Floodplain Preservation and Protection, Wetland Preservation and Protection, Access and Maintenance Purposes.

Outlot 4 is proposed to be dedicated (fee interest transfer) to the Village of Pleasant Prairie. The Outlot shall be labeled as "Outlot 4 Dedicated for Public Park Purposes". There shall also be an easement over this same area of Outlot 4 granted to the Developer for the construction and development of the public park.

Outlot 5 is proposed to be dedicated (fee interest transfer) to the Creekside Terrace Homeowner's Association. The Outlot shall be labeled as "Outlot 5 Dedicated for Storm Water, Drainage, Retention Basin, Access and Maintenance Purposes". There shall also be an easement over this same area of Outlot 5 granted to the Village for the same Storm Water, Drainage, Retention Basin, Access and Maintenance Purposes. There shall also be an easement over this same area of Outlot 5 granted to the Developer for the construction and development of the storm water facilities.

POPULATION PROJECTIONS: Based on the 2010 Census information for the Village of Pleasant Prairie, the average number of persons per household is 2.71 and school age children between the ages of 5 and 19 make up 22.6% of the population. Therefore, based on the currently shown 64 lots and one two-unit condominium, it is projected that **179 persons** will be added to the population upon full build-out of this development. Pursuant to the information provided by the Kenosha Unified School District for Pleasant Prairie (.42 x number of dwelling units), **28 public school age children** are likely to come from this development at full build out. [Note: The Village continues to provide copies of proposed developments to the Kenosha Unified School District to assist in their school enrollment projections, school facility planning efforts and school boundary adjustments.]

FLOODPLAIN BOUNDARY ADJUSTMENT: On October 20, 2003 the Village Board adopted Resolution #03-42 to approve the Floodplain Boundary Adjustment for the Creekside development. In January 2005, the Developer of Creekside Crossing obtained the required Permits from FEMA to begin the work. The floodplain boundary adjustment work had begun in the area that is already development and had not been completed for the entire project. This FEMA approval is still valid and will be completed by the petitioner as originally designed and approved by the Village, DNR and FEMA.

WETLANDS: The wetlands within the undeveloped Creekside Crossing development area have been delineated in 2014 (see ***attached*** report). A number of pocket wetlands now exist on the property; however the DNR and the ACOE will only be taking jurisdiction over some of these wetlands. In the ***attached*** letter dated January 23, 2015 from the WI DNR wetlands 6, 7 and 10 will be subject to state wetland and waterway regulations. This letter also does not indicate if wetland 5 will be subject to state wetland and waterway regulations. If wetland 5 is subject to state regulations, the developer will be required to obtain the required permits to fill this wetland for the required roadway. In the ***attached*** letter dated April 29, 2015 that from the ACOE, they will be taking jurisdiction on Wetland 6, 7, 10. A small portion of wetland 6 will required to be filled for the construction of Creekside Circle; therefore wetland fill permits will be required to be obtained by the Developer from both the DNR and the ACOE.

SITE ACCESS: This development will utilize two (2) existing public access points onto 93rd Street at 63rd and 66th Avenues. The third access point—91st Street--will be extended as a rural roadway from the development limits to Old Green Bay Road. It is intended and required that 91st Street will be the construction access, and haul roadway for the development of the subdivision infrastructure, the single family houses and the two-unit condominium.

The 91st Street stub to the west does not align with the existing Village owned right-of-way and needs to align for its eventual extension.

PUBLIC IMPROVEMENTS: All public and private improvements shall be made by the Developer at the Developer's expense.

The entire development shall be provided with and serviced by municipal roadways, sanitary sewer, water and storm sewer. In particular,

- **Municipal roadways** shall be extended throughout the development pursuant to the Village's new development standard (e.g. roadway pavement will be reduced form 37' to 33' b/c to b/c) for other roadways, except for Creekside Circle and 62nd Avenue roadway width which shall be 37-feet (back-of-curb to back-of-curb). Also public sidewalks shall be extended on both sides of each public street and on the south side of Creekside Circle. Alternate side parking regulations will be in effect for the development. Using 91st Street as a construction access roadway shall require that the roadway be graveled and paved per Village standards. The Village Board shall determine the extent of additional public improvements to be completed in 91st Street – e.g. can the road be initially constructed as a rural profile?
- **Municipal water** shall be extended throughout the development and shall connect to the existing municipal water in Creekside Crossing development and in 91st Street to Old Green Bay Road.
- **Municipal sanitary sewer** shall be extended from the existing sewer located in Creekside Crossing development to service the entire remaining development area.
- **The municipal park** shall be graded and seeded will be completed in the park and park related playground equipment (a swing set, climbing structure, spring action

riding units and two sitting benches shall be installed in the park-similar to the existing Creekside Park with the addition of the benches).

CERTIFIED SURVEY MAP:

All of the Dedication and Easement Provisions shall be added onto the Certified Survey Map. Restrictive Covenant Language shall also be shown on the Certified Survey Map. The Village staff can prepare the draft language using the Condominium Plat for this area. Further discussion is warranted.

ZONING MAP AMENDMENT:

The petitioner is requesting to rezone the one two unit condominium lot from R-8, UHO (Urban Land Holding Overlay District, FPO, Floodplain Overlay District to the R-8, Two Family Residential District. The removal of the FPO District must either be tabled or presented at a later date as the new lot is subject to the Floodplain Boundary Adjustment being approved and the construction work being completed, inspected and field verified and a FEMA CLOMR-F being provided to the Village.

At the time of the Preliminary Plat is submitted or when fill permits are obtained from the WI DNR and ACOE for the wetland areas proposed to be filled --another Zoning Map Amendment will be required to rezone the field delineated wetlands into the C-1, Lowland Resource Conservancy District, excepting any wetlands that are granted approval to be filled; to rezone the single family lots into the R-4.5, Urban Single Family Residential District, and to rezone the Outlots excluding the wetlands into the PR-1, Park and Recreation District. A third Zoning Map Amendment will be required when the floodplain boundary adjustment grading work has been completed to correctly show the location of the 100-year floodplain on the property. In addition, each time that the zoning map is requested to be amended, an amendment to the Village Comprehensive Land Use Map 9.9 will also be required to be amended.

The Village staff recommends conditional approval of the Whittier Heights Neighborhood Plan Amendment and Plan Commission Resolution #15-15 subject to the above comments and following changes to the Neighborhood Plan

1. See ***attached*** changes to the Neighborhood Plan. Upon making the required changes please submit 3 large copies for Village staff final review. Once approved, then provide a pdf of the plans and a digital copy of the plans to allow the Village GIS department.
2. Upon the revisions to the plans being submitted, Exhibit 1 of Plan Commission Resolution will need to include the map.

The Village staff recommends conditional approval of the Conceptual Plan subject to the above comments and the following conditions:

1. Will the development be phased or constructed all at one time? Provide details.
2. The lots shall all be a minimum of 12,500 square feet in area. Adjust any lots not meeting this requirement.
3. Corner lots shall be 20% larger than other lots due to the street yard setbacks – all lots shall be re-examined to meet this requirement. (Corner lots must be a minimum of 20% larger than 12,500 square feet).
4. All lots shall have a lot depth of at least 125 feet. The lot depth of lot 24 shall be adjusted. (Lots 24 and 33 – house sizes must be further evaluated). Also, Lot 32 and 47 are very awkward in its dimension and shape for buildable areas.

5. If any portion of the creek/waterway is considered navigable it should be labeled on the Conceptual Plan.

6. The 89th Street and 62nd Avenue roadway and utility improvements to the property limits. A sign shall be placed which indicated that the roadway will be extended in the future. Temporary barricades shall be installed at the Developer's expense.

7. The road pavement width and back of curb dimensions shall be shown on the Conceptual Plan.

8. Certain corner lots will need to have driveway access restrictions imposed based upon the size and shape of the lots. In addition there is a minimum of a 100 foot driveway setback that needs to be identified from center line of the intersection to the driveways.

9. The minimum 75' shore yard building setback shall be shown on the Conceptual Plan.

10. It is not clear where any significant tree areas are located within the development – that are not being impacted by the Floodplain Boundary Adjustment. Further discussion is warranted. All of the trees to be preserved shall be located within **Tree Preservation and Protection, Access and Maintenance Easements**. The Preliminary and Final Plat shall include a legal description including the acreage of each Tree Preservation and Protection Easement areas within the development. Specifically, Dedicated Tree Preservation and Protection, Access and Maintenance Easement Areas shall be provided on Lots _____ on the Plat. Penalty provisions shall be included on the plat and in the declarations for the removal of any trees within these areas. Also, a walk of the property to be scheduled with the Village in the next few weeks may also increase the number and location of tree preservation areas to be shown.

11. The chart on the Preliminary and Final Plats shall also include the amount of wetlands and woodlands (?) to be preserved. What is the extent of the grading limits on the site?

12. The legal description of the wetlands and the square footage of each wetland area shall be included on the Preliminary and Final Plats.

13. Prior to consideration of the Final Plat, written approval to fill the wetlands shall be obtained by the Developer and submitted to the Village. The Final Plat shall not show the wetlands proposed to be filled.

14. Sidewalks shall be required on both sides of the new roadways throughout the development, except on Creekside Circle wherein sidewalks will only be required on the south side.

15. Are any permanent development sign(s) proposed? If so, easements shall be shown and labeled as "**Dedicated Signage, Landscaping, Access and Maintenance Easement Areas**".

16. All outlots, outside of wetland areas shall be planted/landscaped.

17. Please review and revise the modified draft Declaration of Restrictions, Covenants and Easements.

18. Outlot 1 is proposed to be dedicated (fee interest transfer) as common open space to the Creekside Terrace Homeowner's Association, Inc. The Outlot shall be labeled as "**Outlot 1 Dedicated by the Developer to the Creekside Terrace Homeowner's Association, Inc. for Open Space, Wetland Preservation and Protection, Access and Maintenances Purposes**". The wetland areas shall be separately

delineated and identified. There shall also be an easement over this same area of Outlot 1 granted to the Village for the same Open Space, Wetland Preservation and Protection, Access and Maintenance Purposes.

19. Outlot 2 is proposed to be dedicated (fee interest transfer) to the Creekside Terrace Homeowner's Association, Inc. The Outlot shall be labeled as "**Outlot 2 Dedicated by the Developer to the Creekside Terrace Homeowner's Association, Inc. for Open Space, Access and Maintenance Purposes**". There shall also be an easement over this same area of Outlot 2 granted to the Village for the same Open Space, Access and Maintenance Purposes.

20. Outlot 3 is proposed to be dedicated (fee interest transfer) to the Creekside Terrace Homeowner's Association. The Outlot shall be labeled as "**Outlot 3 Dedicated by the Developer to the Creekside Terrace Homeowner's Association, Inc. for Floodplain Preservation and Protection, Wetland Preservation and Protection, Access and Maintenance Purposes**". The wetland areas shall be separately delineated. There shall also be an easement over this same area of Outlot 2 granted to the Village for the same Floodplain Preservation and Protection, Wetland Preservation and Protection, Access and Maintenance Purposes.

21. Outlot 4 is proposed to be dedicated (fee interest transfer) to the Village of Pleasant Prairie. The Outlot shall be labeled as "**Outlot 4 Dedicated for Public Park Purposes**". There shall also be an easement over this same area of Outlot 4 granted to the Developer for the construction and development of the public park.

22. Outlot 5 is proposed to be dedicated (fee interest transfer) to the Creekside Terrace Homeowner's Association. The Outlot shall be labeled as "**Outlot 5 Dedicated for Storm Water, Drainage, Retention Basin, Access and Maintenance Purposes**". There shall also be an easement over this same area of Outlot 5 granted to the Village for the same Storm Water, Drainage, Retention Basin, Access and Maintenance Purposes. There shall also be an easement over this same area of Outlot 5 granted to the Developer for the construction and development of the storm water facilities.

23. Additional storm water easements may be required for any portion of the new development that utilizes the existing Creekside Crossing retention basins.

24. Engineering Comments: Detailed Engineering review will be completed upon submittal of detailed engineering plans; however, the following general comments are provided below:

    a. The Engineering Department has reviewed the Conceptual Plan for the above referenced subdivision and have the following comments listed below. This review is cursory due to the limited information provided as part of the concept plan. A more detailed review will be completed as additional information is provided and a preliminary subdivision plat is submitted.

    b. The existing floodplain limits should be shown on the concept plan. The floodplain adjustment which was started for the original Creekside Crossing Subdivision will was not completed. The adjustment will need to be finalized as part of this development.

    c. Upon review of the Conceptual Plan, five foot wide concrete sidewalks shall be provided as previously noted. Sidewalks shall be shown on the plan.

    d. The need for additional ROW or easements will need to be evaluated for Creekside Circle to fit the required sidewalk and public street trees along the roadway corridor.

e. Review of storm water easement locations will be completed upon submittal of civil engineering plans. ("**Dedicated Storm Water, Drainage, Access and Maintenance Easements**").

f. Roadways shall meet the Village's new composite concrete / asphalt roadway section.

g. Creekside Circle and 62nd Avenue roadway width shall be 37-feet (back-of-curb). The Village will consider reducing the widths all other roads to 33-feet (back-of-curb) on a project basis. Alternate side parking regulations will be required for the reduced road width areas.

h. 91st Street is offset from the existing ROW to the west due to the wetlands. The Engineering plans shall show the "future" alignment to Old Green Bay Road. Also, it shall be verified that the offset and wetland areas do not prohibit 91st Street to be used as a construction access.

i. There are existing public utilities (storm, water, sanitary) within the proposed development that are not shown on the plan. The utilities and any existing easements shall be shown on the plan.

j. The plan needs to include existing topographic contour information.

k. The east end of 89th Street will require a temporary cul-de-sac turnaround. Further discussion is warranted regarding the subdivision development at the termination of 89th Street and lot 36.

l. Further review of the subdivision will be completed upon submittal of civil plans including the following:

m. Grading / Erosion Control Plan

n. Roadway and Storm Sewer Plans.

o. Sanitary Sewer and Water Main Plans.

p. Landscaping and Lighting Plan.

q. Stormwater Management Plan.

r. Construction Specification Manual.

25. **The Conceptual Plan approval shall be valid for a period of one (1) year. Prior to the expiration of the Conceptual Plan, the Preliminary Plat, which satisfies the conditions of the Conceptual Plan approval shall be submitted and considered by the Plan Commission and Village Board.**

26. **Upon approval of the Conceptual Plan** the following documents and electronic copies of the following documents shall be submitted to the Village for staff review prior to the Village accepting the Preliminary Plat application and application fee.

a. Eight (8) draft copies of the Preliminary Plat.

b. A revised electronic draft of the Declaration of Restrictions, Covenants and Easements after the Village staff's review.

c. Eight (8) draft copies of the Street Lighting Plan, including a copy of the We Energies electrical distribution system plan.

d. Eight (8) draft copies of the Landscaping Plan.

e. Eight (8) revised copies of the Engineering Plans, Profiles and Specifications.

27. The exact location and size of utility easements shall be verified with We Energies and included on the Preliminary and Final Plats. All utility easements shall be labeled as **"Dedicated Utility Easements"**. The Homeowners are collectively responsible for the ongoing maintenance and facility usage charges as imposed by We Energies. Pursuant to current Village procedures, the Village will coordinate billing for these charges to the Association/homeowners.

28. Provide a copy of the detailed Park Plan, including grading and park equipment details.

29. The Landscaping Plan shall include at a minimum:

    a. The Landscaping Plan shall utilize the grading plan as its base map.

    b. The Landscape Plan shall include detailed plantings in all cul-de-sac islands.

    c. The Landscape Plan shall indicate the species, location and both the planting and mature size of each particular type of tree/shrub.

    d. The Landscaping Plan shall show all of the street trees – minimum of 6 feet in height and 2" caliper, in staked mulch beds at initial planting. Provide all details on the Plan.

    e. The Landscaping Plan shall show all easement to verify that there are no conflicts.

30. The Preliminary Plat shall only be valid for two (2) years from the Village Board's conditional approval, during which all conditions must be satisfied and the Final Plat shall be submitted. If the property is not final platted within the two (2) years of the Village Board's approval, the Village shall require that the plat be resubmitted for a new Preliminary Plat approval along with the appropriate filing fees.

31. **Upon approval of the Preliminary Plat** the following documents shall be submitted to the Village for staff review prior to the Village accepting the Final Plat application and application fee.

    a. Five (5) draft copies of the Final Plat.

    b. A revised draft of the Declarations of Restrictions, Covenants and Easements. This document shall be in final form prior to consideration of the Final Plat by the Plan Commission.

    c. Five (5) revised copies of the Public Street Lighting Plan, including a copy of the We Energies electrical distribution system plan and contract.

    d. Five (5) revised draft copies of the Landscaping Plan.

    e. Five (5) revised copies of the Engineering Plans, Profiles and Specifications.

32. Upon Village staff review of the draft Final Plat and other documents as specified above, the Final Plat application, application fee and related documents shall be submitted to the Village so that the required hearing can be scheduled. In addition, a colored rendering shall be submitted to the Village of the Final Plat and Landscaping Plan. The colored renderings shall clearly show the wetlands to be preserved, the wetlands to be filled, the location of retention basins, the trees proposed to be preserved, the trees proposed to be removed. This colored drawing shall be submitted to the Village staff on a disc. The drawings shall be submitted in a tif or jpeg format for the Village's use in the PowerPoint presentation at the Plan Commission and Village Board meetings.

33. The exact location and size of Utility Easements shall be verified with We Energies prior to Final Plat consideration.

34. All easements shall be shown on the Preliminary and Final Plats, Engineering Plans and Landscaping Plans.

35. Upon Village approval of the Engineering Plans, Profiles and Specifications, the Developer shall submit two (2) copies of the final Village approved plans and specifications so that the Village can request approval from the Kenosha Water Utility (KWU).

36. Upon written utility plan approval from the KWU, the Developer shall obtain written approval from the WI DNR.

37. Upon Village approval of the Final Engineering Plans and Specifications, Landscaping Plan and Street Lighting Plan the following **shall be submitted to the Village** for staff review so that the Development Agreement can be prepared by the Village:

    a. A copy of the required wetland fill, N.O.I. Chapter 30 permits from the WI DNR and ACOE.

    b. A copy of the Public sanitary sewer and water approval letters from the KWU, WI DNR, and SEWRPC.

    c. Ownership verification documents.

    d. A copy of the signed contracts, certificates of insurance, and performance and payment bonds. The contracts shall have the Developer's name as shown on the title of the property. The certificates of insurance shall also list the Village of Pleasant Prairie as an insured party.

    e. A Policy of Title Commitment equal to the cost of public improvements. The title policy shall indicate that the right-of-way is being dedicated free and clear of any encumbrance liens or judgments.

    f. A copy of the signed public street tree/landscaping contract, Street Tree/Landscaping Plan and certificate of insurance.

    g. A copy of the signed We Energies contract and Street Lighting Plan.

    h. Three (3) copies of the Erosion Control Permit application, plans and related $2,000 fee.

    i. Three (3) copies of the Work in the Right-of-Way application, plans and related $150.00 fee.

    j. The Street Sweeping Cash Deposit - $2,000.

    k. Five (5) paper copies of the Final Engineering Plans, Profiles and Specifications and two (2) electronic copies.

    l. Five (5) paper copies of the Landscaping Plan and two (2) electronic copies.

    m. Five (5) paper copies of the Street Lighting Plan, including a copy of the We Energies electrical distribution system plan and two (2) electronic copies.

    n. A "draft" LOC shall be provided to the Village for staff review. (See comment 62 below related to the LOC.)

38. Upon staff review and approval of all of the requirements listed above, the Final Plat application, application materials and application fee shall be submitted for Village to schedule the required public hearing before the Village Plan Commission.

39. At least two weeks prior to Village Board consideration of the Final Plat, Development Agreement and related documents the following shall be finalized and submitted:

    a. The Original Final Plat, 5 full-size copies, 1 reduced 11" x 17" copy and the State DOA approval letter. The plat shall be provided in a digital format –See comment below for format.

    b. Final Memorandum of Development Agreement (to be drafted by the Village and reviewed by the Developer).

    c. Final Development Agreement (to be drafted by the Village and reviewed by the Developer).

    d. Final Park Improvement Agreement (to be drafted by the Village and reviewed by the Developer)

    e. Recorded Articles of Incorporation for the Homeowner's Association.

    f. Final Declaration of Restrictions, Covenants and Easements.

    g. Final Homeowner's Association By-Laws.

    h. Final Condominium documents for the one two-family condo.

    i. Title Report Commitment, updated the day before closing and again within 7 days after closing and recording of the documents.

    j. Verification of taxes and outstanding special assessments being paid. Any outstanding taxes, special assessments or invoices shall be paid prior to recording the Final Plat and Memorandum of Development Agreement.

40. A one year minimum Irrevocable Letter of Credit (LOC) to the Village, in the amount of 115% of the total cost of public related improvements, including street trees, street lights, street signs, field staking, inspections and construction related services (including sanitary sewer, and storm sewer cleaning and televising), shall be submitted to the Village. The Itemized Cost Breakdown Exhibit will be prepared by the Village staff to determine the amount of the Letter of Credit and the cash payments. *IMPORTANT: A draft Letter of Credit equal to the cost breakdown analysis (need to verify proper format and dollar amount of Letter of Credit prior submitting the Original Letter of Credit..* The Cash payments and the "Final" LOC shall be provided prior to the Village at the closing.

41. If any of the houses are proposed to be used as a model or marketing office, a Conditional Use Permit application will be required to be submitted for consideration by the Plan Commission.

42. The Final Engineering Plans and Final Plat shall be submitted to the Village in electronic format which satisfies the following acceptance criteria. Exceptions will be considered to these rules on a case-by-case basis by the Village. Written approval for any exceptions must be obtained from the Village of Pleasant Prairie at the start of the project. If you have any questions contact Matt Fineour, Village Engineer at (262) 925-6778.

    a. Data shall be delivered in vector format. The preferred format is ESRI Shape files. Other acceptable formats include AutoCAD DXF, Microstation DGN, Intergraph IGDS, MapInfo MIF, ESRI Arc/Info Coverages, and ESRI Interchange files. Scanned images and raster files will not be accepted for this type of data.

b. The coordinates in the data set shall be projected to the Wisconsin State Plane South Coordinate System based on the NAD27 Datum.

43. Upon Village Board approval of the Final Plat and within seven (7) days of said approval the Village will host a closing to have the Plat(s) and all of the Development Agreement documents signed. The Developer shall be responsible for recording all required documents at the Kenosha County Register of Deeds Office and provide proof of recording to the Village within 72 hours of closing with the Village.

44. Following the closing, the Developer's engineer shall conduct a pre-construction meeting at the Roger Prange Municipal Building with all of the contractors, utilities and Village on-site inspectors (meeting is required prior to public improvement field work commencing). Contact Jean Werbie-Harris to coordinate the pre-con meeting.

45. This development shall be in compliance with the Village Land Division and Development Control Ordinance, the Village Municipal and Zoning Codes, the Village Construction Site Maintenance and Erosion Control Ordinance and the State of Wisconsin Statutes.

46. All Village fees incurred by the Village Engineer and/or expert assistant required by the Village throughout the development process will be billed directly to the Developer. Such fees shall be paid in a timely manner.

47. All Village fees incurred by the Village Community Development Department and/or expert assistant required by the Village throughout the development process will be billed directly to the Developer. Such fees shall be paid in a timely manner.

48. The Village Board has adopted Ord. #05-25 related to Impact Fees. Impact fees are due at the time building permits are issued. Currently, these fees are $1,490 per housing unit.

49. All public and private improvements shall be completed, inspected, and Village approved including having sanitary sewer and storm sewer televised, water sampled with safe samples, roadways completed, electric and gas utilities installed, signage installed and as-built utility and grading plans submitted prior to the issuance of any building permits in accordance with the Development Agreement on file with the Village.

Village staff recommends that the Plan Commission table until the Condominium is approved by the existing Creekside Crossing Condominium Association so Village staff can prepare all the dedication and easement language and the Floodplain Boundary Adjustment is completed and approval from FEMA is obtained.

Village staff recommends that the Plan Commission table this request until the Floodplain Boundary Adjustment is completed and approval from FEMA is obtained.

VILLAGE OF PLEASANT PRAIRIE PLAN COMMISSION
RESOLUTION #15-15

TO AMEND THE VILLAGE OF PLEASANT PRAIRIE, WISCONSIN
2035 COMPREHENSIVE PLAN

WHEREAS, on December 19, 2009 the Village Board adopted the *Village of Pleasant Prairie, Wisconsin 2035 Comprehensive Plan* (Comprehensive Plan); and

WHEREAS, the property owner, Creekside PP, LLC, is proposing to develop the remaining vacant land north and west of the Creekside Subdivision and the Creekside Crossing Subdivision and Condominium development adjacent to 89th, 90th and 91st Streets, 90th Place, 62nd Avenue, and Creekside Circle in the southwest portion of the Whittier Creek Neighborhood Plan with 64 single family home lots and 1-2 unit condominium building; and

WHEREAS, development in the Village shall be consistent with the Comprehensive Plan; therefore prior to subdividing and developing the property for development the following amendments to the Comprehensive Plan are proposed to amend a portion of the Whittier Creek Neighborhood Plan 32 of Appendix 9-3 for the as shown and described in **Exhibit 1**; and

WHEREAS, on August 10, 2015 the Village Plan Commission held a public hearing to discuss the proposed amendments.

NOW THEREFORE, BE IT RESOLVED, that pursuant to Sections 62.23 (3) (b) and 66.1001 (4) (b) of the Wisconsin Statutes, the Village of Pleasant Prairie Plan Commission hereby approves the aforementioned amendments to the Village of Pleasant Prairie, Wisconsin 2035 Comprehensive Plan as presented at the August 10, 2015 public hearing.

BE IT FURTHER RESOLVED that the Plan Commission does hereby recommend that the Village Board enact the Ordinances adopting the amendments, as referenced above, to the *Village of Pleasant Prairie 2035 Comprehensive Plan*.

Adopted this 10th day of August 2015.

VILLAGE OF PLEASANT PRAIRIE

ATTEST:

_____
Thomas W. Terwall
Plan Commission Chairman

_____
Donald Hackbarth
Secretary

Date Posted: _____

Neighborhood Plan 32 of Appendix 9-3

Whittier Creek Neighborhood

The Whittier Creek Neighborhood Plan was prepared and adopted by the Plan Commission on March 12, 2007 by Resolution #07-10 and the Village Board adopted a Resolution of support of on March 19, 2007 by Resolution #07-11. On June 21, 2010 a portion of the Whittier Creek Neighborhood Plan was amended by Ordinance #10-37 to include Ingram Park within the south-central portion of the Neighborhood. On _____, 2015 a portion of the Whittier Creek Neighborhood Plan was amended by Ordinance #15-____ for a portion of the southwest section of the Neighborhood as shown on Map 32-a

The Whittier Creek Neighborhood is bounded by STH 31 (Green Bay Road) on the west, 93rd Street on the south, Cooper Road on the east and 85th Street on the north. In 1994, a Neighborhood Plan was prepared for a portion of the Whittier Creek Neighborhood generally located east of STH 31 west of approximately 57th Avenue, south of 85th Street and north of 93rd Street; and in 2002 the Neighborhood Plan was re-evaluated and on March 25, 2002 the Plan Commission adopted a revised Neighborhood Plan (Resolution #02-05) for a portion of the Whittier Creek Neighborhood generally located east of STH 31 west of approximately 57th Avenue, south of 85th Street and north of 93rd Street. On April 1, 2002 the Village Board adopted Resolution #02-14 to concur with and support the Neighborhood Plan as approved by the Plan Commission.

In 2007 a Neighborhood Plan has been prepared for the entire Whittier Creek Neighborhood. In 2007 this neighborhood was primarily farm land with a number of home sites adjacent to the arterial roadways with the exception of the Whittier Heights Development and Wil-Char Subdivision in the northeast portion of the neighborhood and Creekside Crossing mixed residential development in the southwest portion of the Neighborhood.

The Village 2010 Comprehensive Plan indicates that an Elementary School Site-Whittier Elementary School at 8542 Cooper Road, two Neighborhood Parks, and the remainder of the land within the neighborhood would be developed as residential uses with the preservation of environmental corridors and the isolated natural areas in the neighborhood. The 2035 Land Use Plan indicates that a Community Park be located within the south central portion of the neighborhood.

In 2015, the Neighborhood Plan was amended for the undeveloped portion of the Creekside development in the southwestern portion of the site to reflect current wetland delineations and to convert the 158 condominium units (11-8 unit buildings, 5-4-unit buildings and 25-2 unit buildings) that were originally proposed to include 64 single family lots and 1-2 unit building.

The Whittier Creek Neighborhood Plan includes:

GOVERNMENT/INSTITUTIONAL AREA: Approximately 7.4 acres of land within the neighborhood is identified as Institutional use, including: the existing Whittier Elementary School located at 8542 Cooper Road and the Holy Family Catholic Book Store located at 9249 93rd Street.

TRANSPORTATION/UTILITIES: Approximately 8.6 acres of this neighborhood is located within a Utility Easement with electric transmission towers generally located at 57th Avenue.

ACCESS TO ARTERIAL ROADS: Pursuant to the Village Comprehensive Plan 85th Street, 93rd Street, Cooper Road and Old Green Bay Road are classified as local arterial roadways and 89th Street is identified as a local collector roadway. In addition, the long-range transportation plan indicates that Old Green Bay Road, 85th Street, Cooper Road and 93rd Street should be improved or widened when traffic counts/new developments warrant such improvements. ~~85th Street will likely be widen to four (4) lane urban profile between 64th~~

~~Avenue and Cooper Road similar to 85th Street east of Cooper Road.~~ 93rd Street will be widened into a three (3) lane urban cross section (one travel lane in each direction and a center turn lane). Cooper Road is proposed to be further evaluated related to the timing and roadway profile required. Due to the environmental constraints within the neighborhood, 89th Street will no longer connect from Cooper Road to Old Green Bay Road. However 89th Street will connect to Creekside Circle which will connect to 91st Street to Old Green Bay Road. ~~89th Street is a collector street extending through the Neighborhood that would connect Old Green Bay Road to Cooper Road and extending further east to 39th Avenue.~~ A single lane roundabout will be constructed at the intersection of Cooper Road and 93rd Street when Cooper Road is constructed south of 93rd Street within the proposed Devonshire Development. New driveway access to the arterial and collector roadways will be limited and new roadways are aligned with existing or proposed roadways on the opposite side of the street. At the time that any portion of the neighborhood is proposed to be developed, proper access will be required to adequately service the proposed development.

[*Note*: A detailed traffic study was conducted by Wayne Higgins with Traffic Engineering Services, Inc. to determine the profile for 93rd Street and to examine if the traffic warrants a four-way stop, a signalized intersection, or a roundabout at the intersection of 93rd Street and Cooper Road. At the February 26, 2007 Plan Commission meeting and the March 5, 2007 Village Board Meeting Mr. Higgins presented his the report and the Village Board approved a single lane roundabout at 93rd Street and Cooper Road and a three lane urban profile for 93rd Street (one travel lane in each direction and a center turn lane) rather than a four lane profile (two travel lane in each direction) on 93rd Street.

A signalized intersection at Cooper Road and 93rd Street would require the same or more right-of-way at this location for the existing properties than would a the single lane roundabout would. The signalized intersection would be more problematic for the existing properties at the northeast and northwest corners to continue to utilize their existing driveways. Traffic would not be stopped at the intersection with a roundabout thus allowing the existing driveway to remain with full access.

The roundabout is proposed to be 120 feet in diameter which will allow for semi-trucks, fire trucks, school buses, garbage trucks, snow plows etc. maneuvering space and a 25 foot diameter green space island would be constructed in the center.

The three (3) lane urban profile roadway on 93rd Street would allow for less right-of-way being required from properties on the north side of 93rd Street. This design would allow for easy and safe access to the existing residential homes that will have driveways on 93rd Street because of the designated center turn lane. The three lanes would provided for two 12 foot travel lanes and a 14 foot center turn lane.

The full improvement on 93rd Street as a three (3) lane urban roadway and the roundabout at Cooper Road and 93rd Street will be constructed as part of the second phase of the required public improvements for the second stage of the Devonshire Development. The cost for improvements to 93rd Street and the roundabout is proposed to be shared between the developers of the land adjacent to 93rd Street. In addition, the Village staff is proposing to apply for grants to assist in the project costs. It is anticipated that a grant application be submitted in April of 2007 for improvements to 93rd Street between 63rd Avenue and 48th Avenue, including the roundabout at Cooper Road.]

OPEN SPACE: This Neighborhood Plan identified approximately 279 acres or 37% of the lands within the neighborhood are proposed to remain as open space. This open space includes approximately 190.4 acres of floodplain, 30.2 acres of wetlands, 39 acres of a

Community Park, 3.5 acres for a Neighborhood Parks and 16 acres of other open space throughout the neighborhood.

- **FLOODPLAIN AREAS**: The 100-year floodplain is currently located adjacent to north and south branches of Jerome Creek. Prior to consideration of any Conceptual Plans on these properties, the 100-year floodplain shall be field verified in accordance with the Village floodplain maps and ordinance regulations. Development in the floodplain is restricted to open spaces that do not interrupt the natural flow of the water. Any development that constricts the flow of water or significantly reduces floodplain storage volumes and may create upstream and/or downstream flooding problems or reduce the capacity of the floodplain to store water. In some instances property can be removed from the floodplain provided proper approvals are obtained from the Village and several other agencies including the Wisconsin Department of Natural Resources (DNR) and the Federal Emergency Management Agency (FEMA). Any area removed from the floodplain through the placement of fill must be contiguous to (next to) land lying outside the floodplain. In addition, the volume of floodplain removal must be created in the vicinity of the filled area on a one-to-one basis. The land that is removed from the floodplain must be filled to an elevation at least two (2) feet above the elevation of the 100-year regional flood elevation. The Neighborhood Plan indicates that floodplain adjustments will be required and that approximately 190.4 acres of land would be located within the 100-year floodplain after the adjustments are made.
- **WETLAND AREAS**: The Neighborhood Plan identifies approximately 30 acres of land as wetlands. Prior to consideration of any Conceptual Plans, the wetlands shall be field verified by a certified biologist in accordance with the Village wetland regulations and approved by the DNR. Some of the wetlands within the undeveloped area have been field verified. Upon field verification of wetlands the Neighborhood Plan may need to be altered to reflect actual conditions. The wetland areas are intended to be preserved and protected from Development.
- **COMMUNITY PARK**: In late December of 2008, the Village of Pleasant Prairie received a 30.73-acre land donation for the creation of a new park from John and Dorothy Ingram located at 5726 93rd Street that all residents will be able to enjoy. Schreiber/Anderson Associates (SAA) was selected to prepare a master plan for the development of this Community Park. SAA facilitated the process to help guide the Ingram's dream of a public park. On June 21, 2010 the Village Board approved an amendment to the Village of Pleasant Prairie Park and Open Space Plan 2006-2011 to include a Conceptual Plan for Ingram Park (totaling approximately 47.3 acres, including 5.4-acres within the ATC transmission line easement area along the east side of park and 2.9-acres of wetlands and floodplain within the park area) to be developed in Phases.
- **NEIGHBORHOOD PARKS AND PEDESTRIAN TRAILS**: Pursuant to the Village's Park and Open Space Plan component of the Village Comprehensive Plan two (2) neighborhood parks located within the Neighborhood and a number of pedestrian trails are proposed pursuant to the Village of Pleasant Prairie 2010 Bicycle and Pedestrian Trails Plan. A 1.46 acre neighborhood park (excluding any wetland and 100 year floodplain) within the first stage of the Creekside Development has been dedicated to the Village and the second ~~2.08~~ 1.07 acre neighborhood park (excluding any wetland and 100 year floodplain) will be dedicated to the Village with the next stage of the Creekside Development. In addition, pursuant to the Village's Park and Open Space Plan pedestrian trails will begin at Whittier School and 57th Avenue, continue south on 57th Avenue to 89th Street continue west on 89th Street to the

northern park in Creekside. At the park in Creekside the trail will continue south through Creekside Development into the Highpoint Neighborhood and will continue west on 89th Street to Old Green Bay Road then north to 85th Street and into the Country Home Neighborhood.

- **OTHER OPEN SPACE**: The Neighborhood Plan identifies approximately 16 acres of other open space within the Neighborhood which includes retention facilities and other open space surrounding the retention facilities, and other non-wetland, non-floodplain areas throughout the neighborhood. In addition, approximately 12.6 acres of woodlands are proposed to be preserved in the neighborhood.

  The Whittier Creek Neighborhood is located with the Des Plaines River Watershed therefore all the storm water drains to the Des Plaines River. The Neighborhood Plan existing retention facilities within the developed areas and indicates potential location where for future storm water management facilities could be located. At the time that any Conceptual Plans are to be considered for any portion of the neighborhood, the developer's engineer will be required to evaluate the development site, based on actual field conditions and shall present a storm water management facility plan which meets the Village requirements.

RESIDENTIAL AREA: Approximately 345 acres of land (excluding existing and future rights-of-way, Government/Institutional, Transportation/Utilities, Public Park, 100-year floodplain and wetlands) within the Neighborhood are proposed to be developed as Residential. [The 345 acres of land includes ~~the~~ approximately 16 acres of the other open space and approximately 12.6 acres of woodlands to be preserved as described above.].

There are ~~249~~ 258 existing single family lots within the Neighborhood and these existing residential developments include: Whittier Heights Subdivision, Whittier Heights Addition #1, Whittier Heights Addition #2, Whittier Heights Addition #3, Wil-Char Subdivision, Creekside Crossing Subdivision, development on 91st Street and 63rd Avenues south of 100th Street; residential development along Cooper Road, 85th Street, Old Green Bay Road and 93rd Street. A total of ~~268~~ 327 additional single family lots are proposed to be developed within the neighborhood.

There are ~~116~~ 134 existing platted multi-family condominium units in the neighborhood known as Creekside Crossing Condominiums located north of 93rd Street between 63rd and 66th Avenue (of the 134 units, 2-8 unit buildings and 2-2 unit buildings have not been constructed to date) and six (6) existing multi-family condominium units located on Old Green Bay Road south of Jerome Creek and eight (8) two unit building locate on Old Green Bay Road north of Jerome Creek. ~~The proposed 168 additional multi-family condominium units in the neighborhood include future phases of the Creekside Crossing Condominium development. The condominium buildings within the Creekside Condominiums range in size from 2 units per building to 8 units per building.~~

The Neighborhood Plan proposes a total of ~~465~~ 585 single family lots and ~~298~~ 150 multi-family units (2 or more units per building) for a total of ~~763~~ 735 dwelling units.

In accordance with the Village Comprehensive Plan, the overall net density for the Neighborhood is recommended to be within the Lower-Medium Density Residential land use category with the average lot area being between 12,000 square feet 18,999 square feet per dwelling unit. This allows for some areas of the Neighborhood to have larger lots while some areas have smaller lots. The net density of the Neighborhood as shown on the proposed Neighborhood Plan would be 20,447 ~~19,696~~ square feet per dwelling unit (345 net residential acres multiplied by 43,560 square feet in an area divided by ~~763~~ 735 dwelling units). This density is lower than required by the Village Comprehensive Plan.

AGRICULTURAL AREA: The property owner of the approximately 29 acre property located at 6109 85th Street in the past has participated ~~participates~~ in the State's Agricultural Preservation Program and did ~~does~~ not intend to develop the land for urban purposes so the area will remain as Agricultural Land designation until the owner proposed further development. The neighborhood plan would need to be re-evaluated at such time as this property is proposed to be developed for urban purposes.

POPULATION PROJECTIONS FOR THE NEIGHBORHOOD: The vacant portions of this Neighborhood will not develop until the property owners wish to develop their land; which makes Neighborhood planning essential for the orderly growth of the community and establishes a framework as to how development should occur and, if and when it occurs. The Neighborhood Plan is a guide for property owners and developers—therefore the population will increase on an incremental basis as the Neighborhood develops over time.

Current population within the Neighborhood:

- 644 ~~379~~ dwelling units
- 1746 ~~1,035~~ persons (which includes 395 ~~238~~ school age children)

Projected population within the neighborhood is based on the total number of households proposed for this neighborhood when fully developed:

- 735 ~~763~~ dwelling units
- 1,992 ~~2,083~~ persons (which includes 450 ~~479~~ school age children)

Based on the 2010 Census information for the Village of Pleasant Prairie, the average number of persons per household is 2.71 and school age children between the ages of 5 and 19 make up 22.6% of the population. The Village provides copies of proposed developments to the Kenosha Unified School District (KUSD) to assist in their long range planning. Pursuant to the information provided by the KUSD for Pleasant Prairie, 42% of the new dwelling units will have new students that will attend public schools or a total of 390 students.

~~The Village provides copies of proposed developments to the Kenosha Unified School District to assist in their long range planning. Pursuant to the information provided by the Kenosha Unified School District for Pleasant Prairie (.42 x number of dwelling units), therefore; a total of 320 public school age children are likely to come from this neighborhood at full build-out.~~

Neighborhood Plan Map 32
Whittier Creek Neighborhood
Adopted by Plan Commission Resolution #07-10 and Village Board Resolution #07-11 and amended by the Village Board on June 21, 2010 by Ord. #10-37.

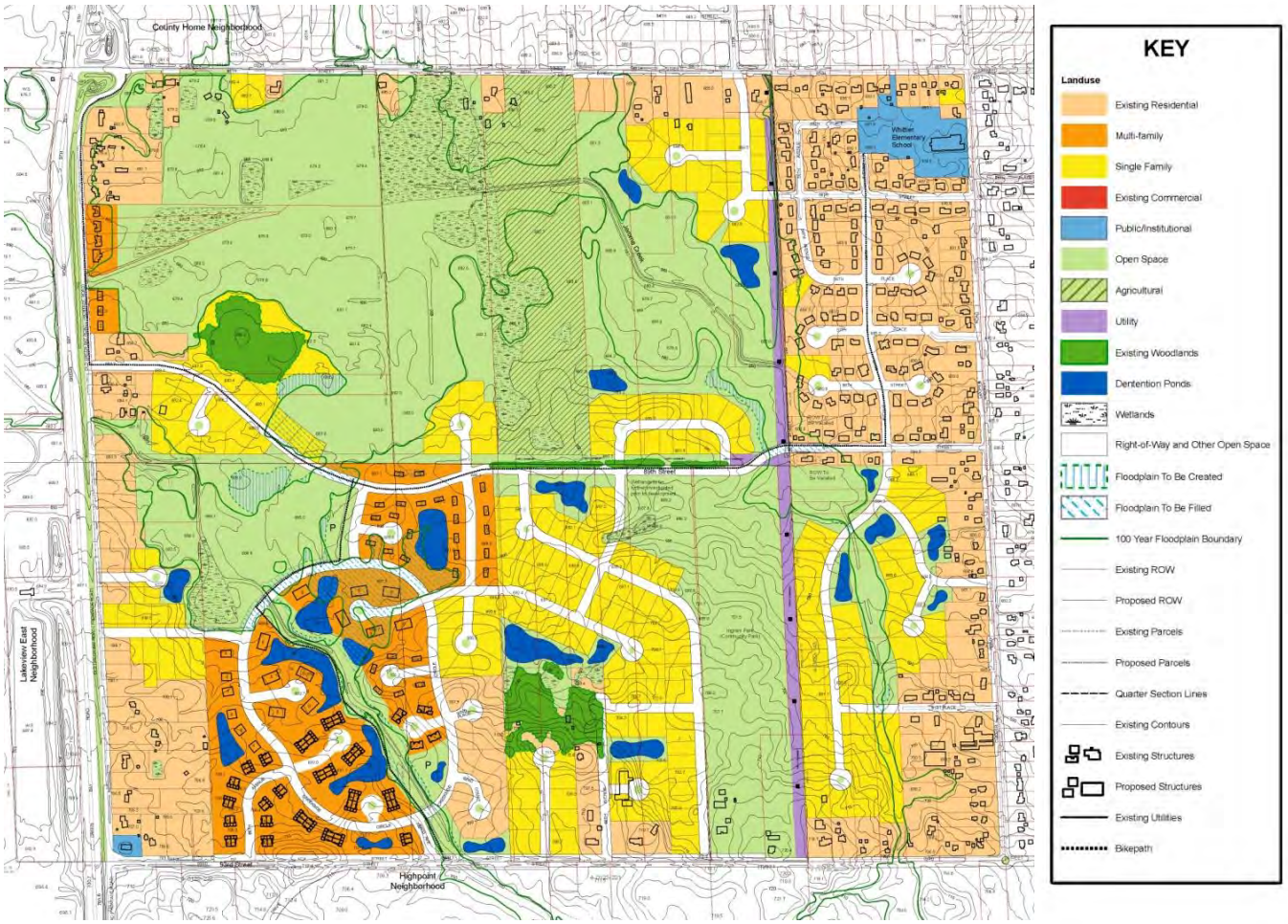

Neighborhood Plan Map 32
Whittier Creek Neighborhood

Amendment adopted by Plan Commission Resolution #15-15 and Village Board Ordinance #15-__

This Illustration shall be changed to incorporate the changes as recommended by the Plan Commission in Village Staff Report dated August 10, 2015.

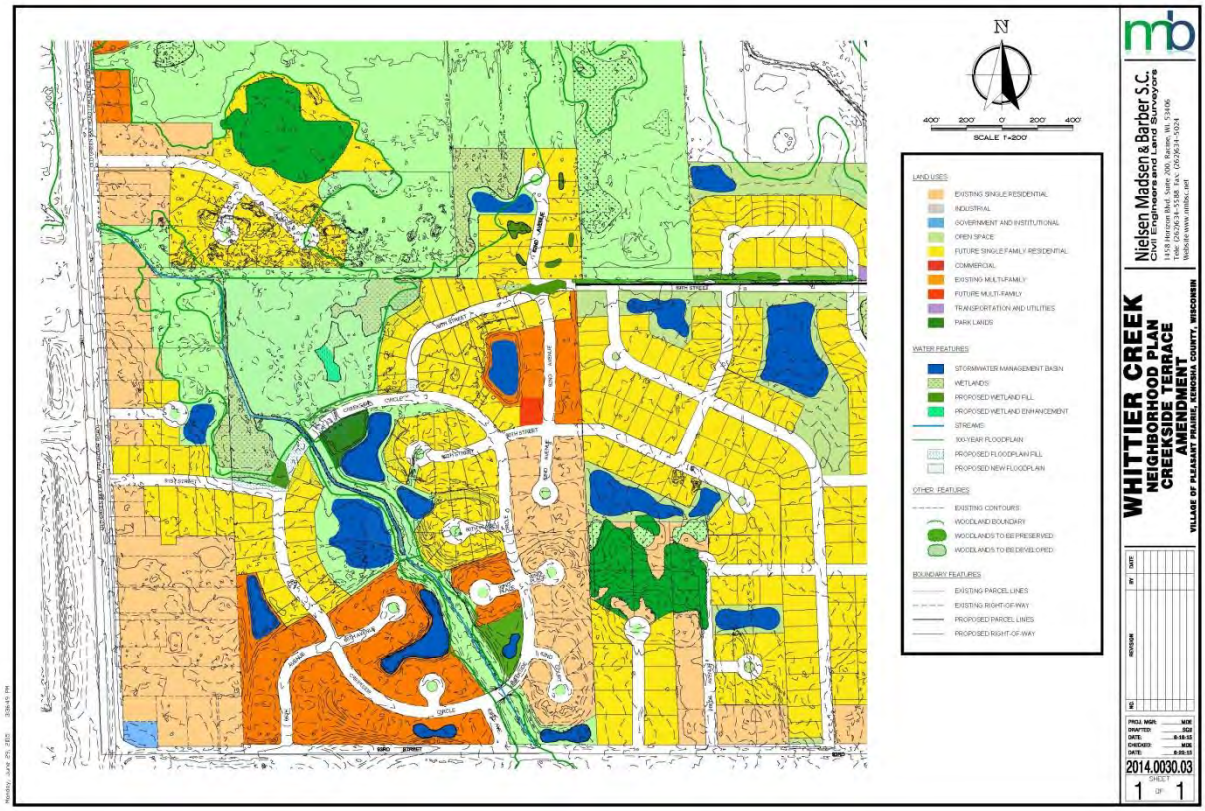

show as floodplain area to be filled

show as flood plain area to be created

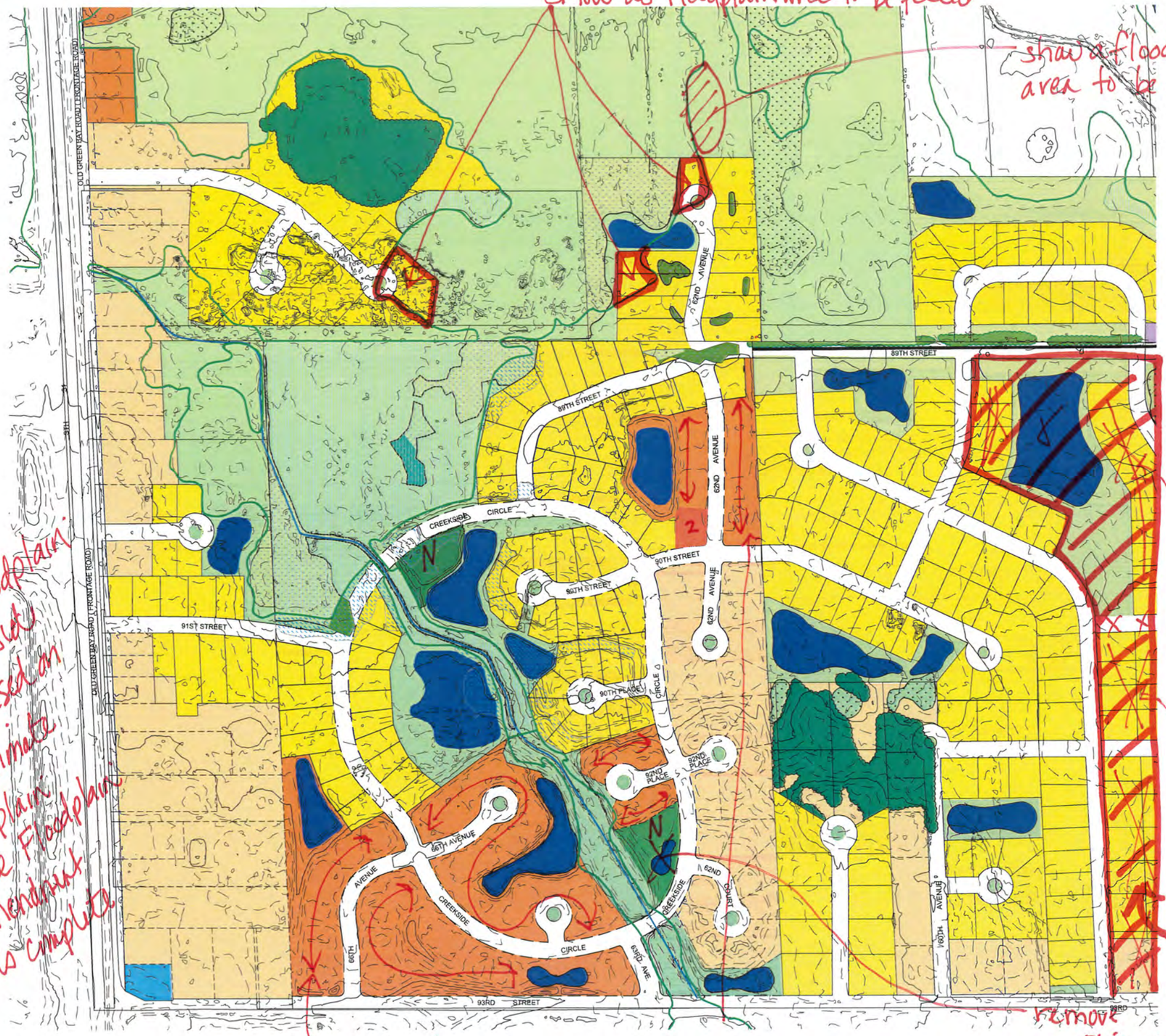

N

400' 200' 0' 200' 400'

SCALE 1"=200'

LAND USES

- EXISTING SINGLE RESIDENTIAL
- INDUSTRIAL
- GOVERNMENT AND INSTITUTIONAL
- OPEN SPACE
- FUTURE SINGLE FAMILY RESIDENTIAL
- ~~COMMERCIAL~~ remove
- EXISTING MULTI-FAMILY
- FUTURE MULTI-FAMILY
- TRANSPORTATION AND UTILITIES
- ~~PARK LANDS~~ Neighborhood Park

WATER FEATURES

- STORMWATER MANAGEMENT BASIN
- WETLANDS
- PROPOSED WETLAND FILL
- PROPOSED WETLAND ENHANCEMENT
- STREAMS
- 100-YEAR FLOODPLAIN
- PROPOSED FLOODPLAIN FILL
- PROPOSED NEW FLOODPLAIN

OTHER FEATURES

- EXISTING CONTOURS
- WOODLAND BOUNDARY
- WOODLANDS TO BE PRESERVED
- WOODLANDS TO BE DEVELOPED

BOUNDARY FEATURES

- EXISTING PARCEL LINES
- EXISTING RIGHT-OF-WAY
- PROPOSED PARCEL LINES
- PROPOSED RIGHT-OF-WAY

Show floodplain in Creekside Dev. based on the ultimate floodplain once Floodplain amendment is complete

remove all ashow green (part of future & existing Community Park)

remove this pond

Show existing building foot prints w/ unit # in each foot print

Nielsen Madsen & Barber S.C.
Civil Engineers and Land Surveyors
1458 Horizon Blvd. Suite 200, Racine, WI. 53406
Tele: (262)634-5588 Fax: (262)634-5024
Website www.nmbsc.net

WHITTIER CREEK
NEIGHBORHOOD PLAN
CREEKSIDE TERRACE
AMENDMENT

VILLAGE OF PLEASANT PRAIRIE, KENOSHA COUNTY, WISCONSIN

NO.	REVISION	BY	DATE

PROJ. MGR:	MDE
DRAFTED:	SCB
DATE:	6-16-15
CHECKED:	MDE
DATE:	6-29-15

2014.0030.03

SHEET 1 OF 1

Monday, June 29, 2015 3:36:49 PM

Wetland Delineation Report

Creekside Crossing
Proposed Residential Development

Village of Pleasant Prairie, Kenosha County, Wisconsin

RASN Project No. 1140272

December 4th, 2014

Wetland Delineation Report

Creekside Crossing
Proposed Residential Development
Village of Pleasant Prairie, Kenosha County, Wisconsin

Prepared by:

Heather D. Patti, PWS
Lead Ecologist/Project Manager

R.A. Smith National, Inc.
16745 W. Bluemound Road, Suite 200
Brookfield, WI 53005-5938
(262) 781-1000

Prepared for:

Bear Development
4011 80th Street
Kenosha, WI 53142

December 4th, 2014

Table of Contents

Wetland Delineation Report…….....……1-4

Appendices

Appendix 1: Figures

Figure 1: USGS Topographic/Site Location Map

Figure 2: Wetland Boundary Map

Figure 3: NRCS Soil Survey of Kenosha County

Figures 4A-D: Aerial Photographs (1990, 2000, 2005, 2010)

Figure 5: Wisconsin Wetland Inventory Map

Figure 6: Advanced Hydrologic Prediction Service 90-day Departure from Normal Precipitation Map

Appendix 2: Site Photographs

Appendix 3: Wetland Determination Data Forms – Midwest Region

December 4th, 2014

INTRODUCTION

R.A. Smith National, Inc. (RASN) is pleased to provide this Wetland Delineation Report for the approximately 62.78-acre Creekside Crossing residential development project northeast of the Greenbay Road and 93rd Street intersection in the Village of Pleasant Prairie, Kenosha County, Wisconsin (Appendix 1, Figure 1). The delineation was requested by Bear Development, LLC; contact information is 4011 80th Street, Kenosha, Wisconsin 53142 (Attn: Mr. S.R. Mills).

The 62.78-acre project area is located on the north side of 93rd Street east of the Green Bay Road intersection, in the SW ¼ and SE ¼ of Section 15, Township 1 North, Range 22 East in the Village of Pleasant Prairie, Kenosha County, Wisconsin (Appendix A, Figure 1). The property is bordered by industrial and residential development to the west, agricultural fields and Wisconsin Wetland Inventory mapped wetlands to the north, and residential land to the east and south.

The purpose of the wetland delineation was to identify the proximity and extent of wetlands within the project area in association with a proposed development project. Fifteen (15) wetlands ("W-1" - "W-15") were identified within the project area. Each wetland is summarized in Table 2 (attached). Our study is presented here in terms of qualifications, methodology, results, and conclusions.

STATEMENT OF QUALIFICATIONS

RASN provides comprehensive wetland and ecological services including wetland delineation, assessment, permitting, and restoration. RASN ecologists offer a wide variety of technical experience in the natural resource field, and have successfully completed projects throughout the Midwestern and Northeastern United States.

Ms. Heather Patti, PWS and Ecologist with RASN, was the technical lead and author on this delineation project. Heather earned a Masters Degree in Botany and a minor in Ecology from North Carolina State University. Ms. Patti is experienced with a variety of aspects of ecological restoration, including wetland, mixed hardwood, and prairie restoration. She provides over 15 years of experience in wetland delineation, assessment, and mitigation. Ms. Patti attended the Basic & Advanced Wetland Delineation course offered by UW-LaCrosse in 2005 & 2013, became a WDNR Assured Wetland Delineator in 2009, and recently attended the Hydric Soil Identification Course offered by UW-LaCrosse in 2011.

Ms. Tina Myers has over 14 years of multidisciplinary ecological experience and has been recognized as a Professional Wetland Scientist (PWS) by the Society of Wetland Scientists (SWS) since 2004. She is also recognized as a Certified Wetland Specialist (CWS) in Illinois. Tina earned a Bachelor's degree in Conservation Biology from the University of Milwaukee in 1998 and has taken a multitude of ongoing educational courses including the Corps Wetland Delineation Training which she took in 2006, Regional Supplement and Field Practicum which she took in 2012, Advanced Wetland Delineation Training which she took in 2013, and Critical Methods in Wetland Delineation which she takes annually. She has performed hundreds of wetlands delineations throughout Wisconsin and Illinois and is also experienced in wetland restoration, wetland and waterway permitting, wetland assessment, vegetation surveys including rare species surveys, wildlife surveys, and environmental monitoring.

Ms. Nancy Wilson, Staff Ecologist and Landscape Architect with RASN, earned a Bachelor of Science Degree in Agronomy with an emphasis in Soil Science from Oklahoma State University. She also earned an Associate of

16745 W. Bluemound Rd., Suite 200 • Brookfield, WI 53005 • (262) 781-1000 • Fax (262) 781-8466
Appleton, WI • Orange, CA • Pittsburgh, PA • rasmithnational.com

Science Degree in Conservation Technology from Fox Valley Technical College in Appleton, Wisconsin, and an additional Associate of Science Degree in Landscape Horticulture from Milwaukee Area Technical College. Ms. Wilson attended the Basic Plant Identification, Hydric Soils and Wetland Delineation courses offered by UW-LaCrosse in 2009, and Wetland Delineation Critical Methods Workshops in 2010, 2011, 2013 and 2014. Ms. Wilson began assisting with wetland delineation projects in 2011.

Mr. Mike Al-wathiqui, wetland ecologist co-op with RASN, earned his Bachelor's of Science degree from the University of Wisconsin-Milwaukee in Biology and Conservation and Environmental Science. He is currently pursuing his Master's degree in Freshwater Sciences and Technology at the University of Wisconsin-Milwaukee's School of Freshwater Science. Mike has over four years of multidisciplinary ecological experience including working as a natural areas technician with the WDNR and as a forestry intern with the City of Milwaukee.

METHODOLOGY

The wetland delineation consisted of a review of available maps and information, followed by a site visit to document field conditions. The fieldwork documented the presence and absence of hydrophytic vegetation, wetland hydrology, and hydric soil indicators outlined in the *U.S. Army Corps of Engineers (USACE) 1987 Wetland Delineation Manual*, Technical Report Y-87-1 (1987) and subsequent guidance documents (USACE 1991, 1992), Guidelines for Submitting Wetland Delineations in Wisconsin to the St. Paul District Corps of Engineers (USACE 1996), the *Basic Guide to Wisconsin's Wetlands and Their Boundaries* (Wisconsin Department of Administration Coastal Management Program, 2005), and the *Interim Regional Supplement to the Corps of Engineers Wetland Delineation Manual: Midwest Region*, the guide for the USDA Natural Resources Conservation Services (NRCS) Field Indicators of Hydric Soils (version 7.0) in the United States, and in general accordance with Wisconsin Department of Natural Resources (WDNR) guidelines. The new Midwest Regional USACE supplement was recently drafted for the purpose of bringing the existing 1987 Manual up to date for wetland delineations. This supplement is intended to be used as an additional guidance to the 1987 Manual, and is not its replacement.

Prior to conducting fieldwork, RASN reviewed several maps for the property, including the United States Geological Survey (USGS) 7.5-minute quadrangle topographic map (Appendix 1, Figure 1), the NRCS Soil Survey (Appendix 1, Figure 3), the United States Geological Service (USGS) historical aerial photographs dated 1990, 2000, 2005 and 2010 (Appendix 1, Figures 4A-D), the Wisconsin Wetland Inventory Map (Appendix 1, Figure 5), NOAA's Advanced Hydrologic Prediction Service Map (Appendix 1, Figure 6), and previous (2005) site development plans provided by the client.

Areas having wetland field indicators were evaluated in the field by Ms. Heather Patti, Ms. Tina Myers, Ms. Nancy Wilson and Mr. Mike Al-wathiqui during three site visits from October 14th-23rd, 2014. According to guidance described in the 1987 Manual and Regional Supplement, areas that under normal circumstances reflect a predominance of hydrophytic vegetation, hydric soils, and wetland hydrology are considered wetlands. RASN collected field data at thirty five (35) sample points, using a transect approach in accordance with the USACE wetland determination forms (Appendix 3). A sharpshooter shovel was used to dig the soil pits, and a soil probe was also used to refine the wetland boundary. Cursory soil probes were also taken in areas that contained transitional hydric vegetation. The delineated wetland areas were flagged and then surveyed by RASN surveyors. Pink wire flags with the words "Wetland Delineation" were used to stake the wetland boundaries. The wetland boundary and data point locations are depicted on Appendix 1, Figure 2, along with several existing stormwater ponds. Observations were made at representative sample points along transects extending through upland and wetland areas.

RESULTS

The USGS topographic map (Appendix 1, Figure 1) depicts the project area as relatively flat topography, with elevations ranging between 687-700 feet above mean sea level. The lowest elevations are in the northern portion of the project area along the un-named tributary to Jerome Creek and in the vicinity of wetland W-5 in the northeast corner of the project area. The highest elevations occur in the southern portion of the project area near wetland W-9 and W-12. Wetland W-6 contains an un-named tributary that flows northerly towards Jerome Creek, which is approximately 1/3 mile to the northwest of the project area.

Mapped soils in the project area from the NRCS Soil Survey Report of Kenosha County, Wisconsin (Appendix 1, Figure 3) are listed in Table 1 below:

Table 1. NRCS Mapped Soil Types at Creekside Crossing, Pleasant Prairie, WI

Type	Map Symbol	Soil Name
Hydric (C)	AtA	Ashkum silty clay loam, 0-2 percent slopes
	So	Sebewa silt loam, clayey substrateum
Hydric via Inclusions (I)	AzA	Aztalan loam, 0-2 percent slopes
	BcA	Beecher silt loam, 1-3 percent slopes
	MlA	Matherton loam, clayey substratum, 1-3 percent slopes
Non-Hydric	HeB2	Hebrom loam, 2-6 percent slopes, eroded
	MzdB	Morley silt loam, 2-6 percent slopes
	MzdB2	Morley silt loam, 2-6 percent slopes, eroded
	ZuB	Zurich silt loam, 2-6 percent slopes

A review of aerial photographs revealed that the project area consisted of active agricultural fields in the 1990s with the unnamed tributary bisecting the project area from the southeast to the northwest, as it does today. From 2000 to 2005, it appears that the project area was allowed to go fallow, but no construction took place. By 2010 two stormwater ponds and one temporary pond had been constructed in the center of the project area. Residential developments had also been constructed around the surrounding southern and eastern boundaries of the project areas.

When assessing the current season's hydrology, recent precipitation data can be useful. Precipitation data can help make determinations as to whether or not the wetland hydrology criterion has been met at recorded data points. Rainfall data recorded by the local WETS table and the National Weather Service's Advanced Hydrologic Prediction Service (AHPS) were used to evaluate the late summer – early fall hydrology (Appendix 1, Figure 6).

According to the local WETS table (Kenosha, WI 4174), average precipitation in the Pleasant Prairie area for the late summer to early fall (July - September) is approximately 11.36 inches. According to the AHPS map (Appendix 1, Figure 6), late summer to early fall precipitation in the Pleasant Prairie area was 1- (-1)" wetter than normal for the October 14th – 23rd site visits. This suggests that the surface or near-surface hydrology at the time of the site visits was normal for this time of year.

Field Investigation of Wetlands

All areas identified on the above-mentioned maps as being wetland or having wetland characteristics were evaluated in the field. Using a transect approach, thirty five (35) data points were examined and fifteen (15) wetlands totaling 8.30 acres (361,520 square feet) were delineated and surveyed by RASN (Appendix 1, Figure 2). Please refer to Table 2 (attached) for a description of each wetland. The two, active open water stormwater ponds were not delineated or surveyed.

Cursory soil probes and representative data points, in both upland areas and those appearing to have wetland characteristics, were sampled in the field to determine the wetland boundaries. The data sheets were compiled and are included in Appendix 3.

CONCLUSION

Based on the wetland assessment completed by RASN, fifteen (15) wetland areas were identified within the project area. Approximately 8.30 acres (361,520 square feet) of wetland were delineated and surveyed by RASN.

This report is limited to the delineation of state and/or federally regulated wetlands on the property. However, there may be other regulated environmental features within the property (e.g., historical, archaeological, threatened or endangered species). Federal, state and/or local units of government may have regulatory authority to restrict land use within or close in proximity to other environmental features. For example, Wisconsin Adm. Code NR 151.12 requires buffers or a "protective area" from the top of the channel of streams, rivers and lakes, or at the delineated boundary of wetlands. The jurisdictional decision on the width of wetland buffers rests with the WDNR. The local unit(s) of government may also have protective area buffers from wetlands than that imposed under NR 151.

The U.S. Army Corps of Engineers has regulatory authority over waters of the U.S. including adjacent wetlands, and the WDNR has regulatory authority over wetlands, navigable waters, and adjacent lands under Ch. 30 Wisconsin State Statues, Act 6, and NR 103 Wisconsin Administrative Code. Local jurisdictions may also have regulations through zoning ordinances. Our client, Bear Development, LLC, respectfully requests verification of the delineated wetlands and a preliminary jurisdictional determination by the USACE.

APPENDICES

Appendix 1: Figures
- **Figure 1: USGS Map/Site Location Map**
- **Figure 2: Wetland Boundary Map**
- **Figure 3: NRCS Soil Survey of Kenosha County**
- **Figure 4A-D: Aerial Photographs (1990, 2000, 2005 and 2010)**
- **Figure 5: Wisconsin Wetland Inventory Map**
- **Figure 6: NOAA's Advanced Hydrologic Prediction Service Map**

Appendix 2: Site Photographs
Appendix 3: Wetland Data Sheets – Midwest Region

Appendices

Appendix 1: Figures

Appendix 2: Site Photographs

Appendix 3: Wetland Determination Data Forms – Midwest Region

Appendix 1: Figures

Figure 1: USGS Map/Site Location Map

Figure 2: Wetland Boundary Map

Figure 3: NRCS Soil Survey of Kenosha County

Figures 4A-D: Aerial Photographs (1990, 2000, 2005, 2010)

Figure 5: Wisconsin Wetland Inventory Map

Figure 6: 90-day NRCS Wetland Inventory Map

Figure 7: 90-day Departure from Normal Precipitation Map

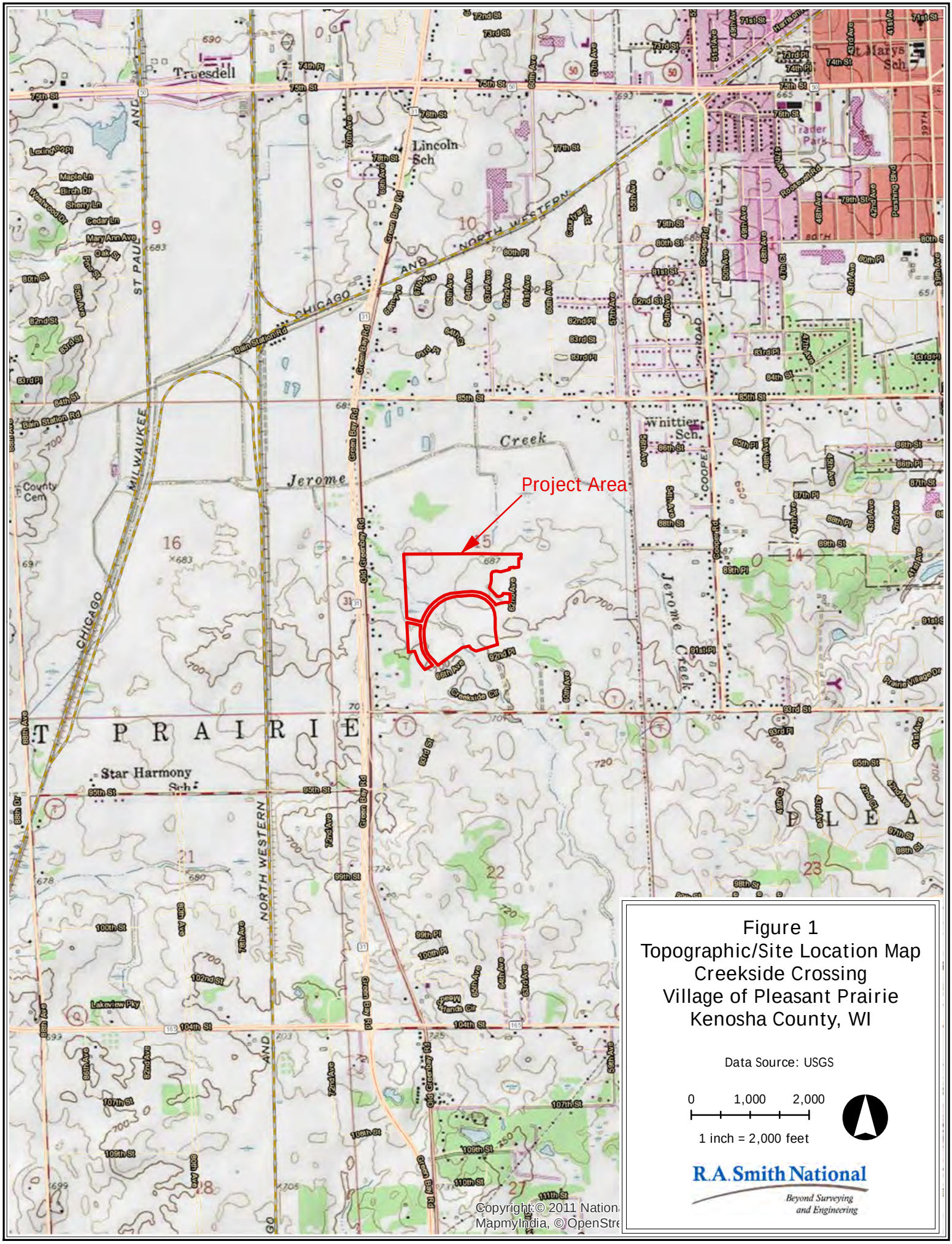

Figure 1
Topographic/Site Location Map
Creekside Crossing
Village of Pleasant Prairie
Kenosha County, WI

WETLAND BOUNDARY MAP

Located on Creekside Circle, in the Village of Pleasant Prairie, Kenosha County, Wisconsin.

Part of the Southwest 1/4 and Southeast 1/4 of Section 15, Township 1 North, Range 22 East, in the Village of Pleasant Prairie, Kenosha County, Wisconsin.

November 25, 2014 Survey No.166223-BMJ

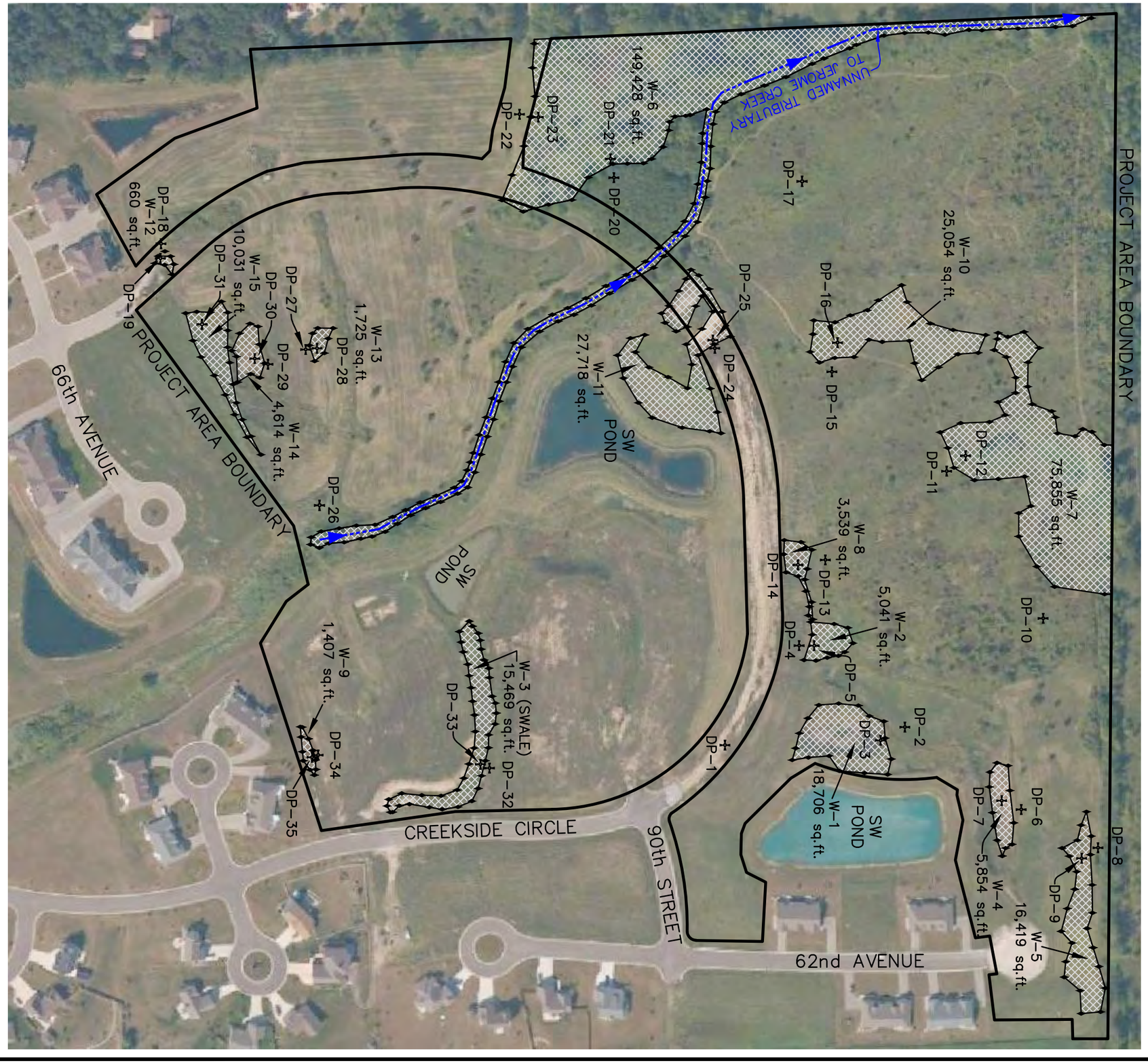

0 200 400 Feet

GRAPHIC SCALE

LEGEND

- DP-1 DATA POINT
- WETLAND AREA
- WETLAND BOUNDARY
- PROJECT AREA BOUNDARY

FIGURE 2.
WETLAND BOUNDARY MAP

R.A. Smith National, Inc.

Beyond Surveying and Engineering

16745 W. Bluemound Road, Brookfield WI 53005
262-781-1000 Fax 262-797-7373 www.rasmithnational.com
Appleton, WI Orange County, CA Pittsburgh, PA

S:\5166223\dwg\WX101B.dwg\CREEKSIDE CIR

SHEET 1 OF 1

R.A. Smith National, Inc.

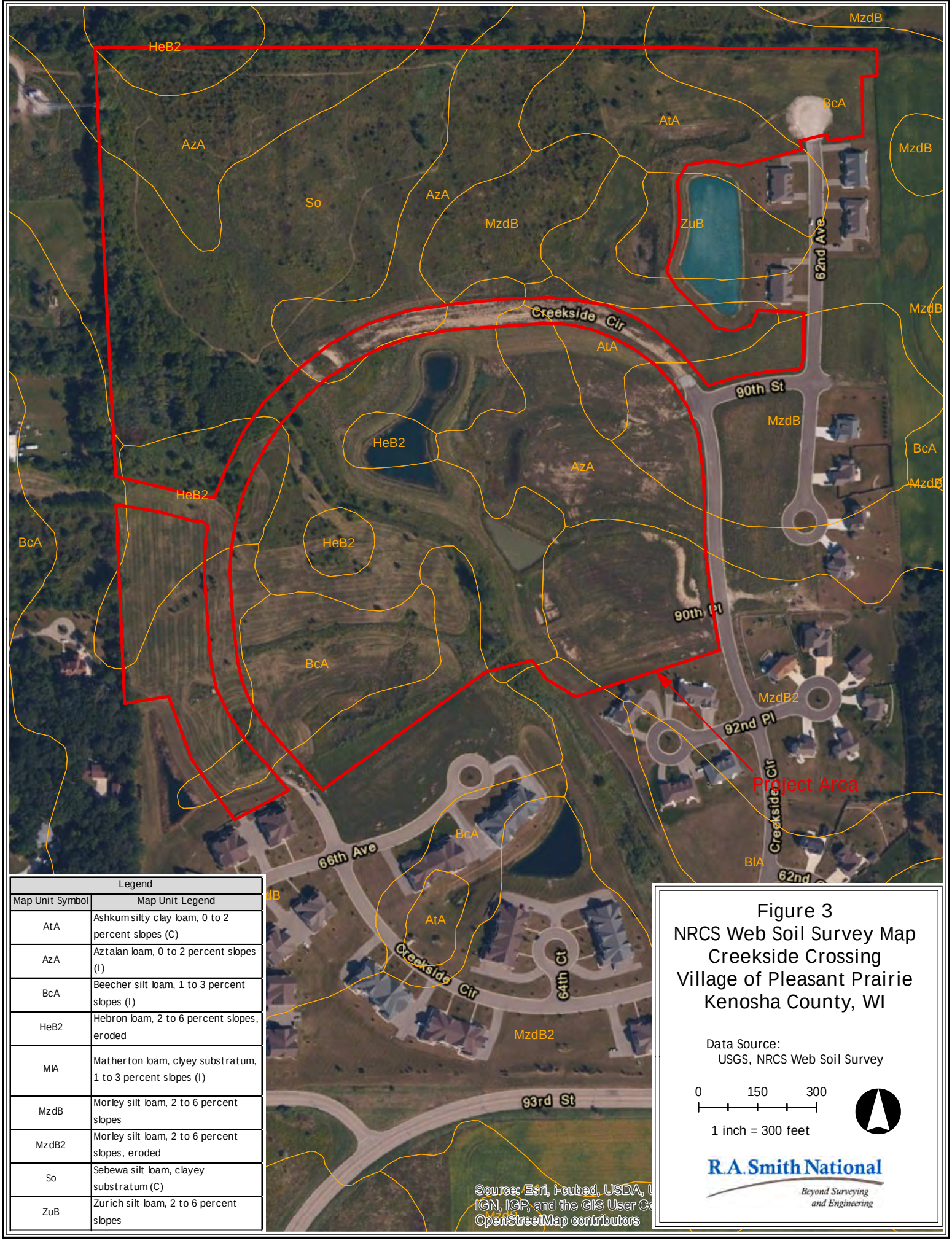

Legend	
Map Unit Symbol	Map Unit Legend
AtA	Ashkum silty clay loam, 0 to 2 percent slopes (C)
AzA	Aztalan loam, 0 to 2 percent slopes (I)
BcA	Beecher silt loam, 1 to 3 percent slopes (I)
HeB2	Hebron loam, 2 to 6 percent slopes, eroded
MlA	Matherton loam, clyey substratum, 1 to 3 percent slopes (I)
MzdB	Morley silt loam, 2 to 6 percent slopes
MzdB2	Morley silt loam, 2 to 6 percent slopes, eroded
So	Sebewa silt loam, clayey substratum (C)
ZuB	Zurich silt loam, 2 to 6 percent slopes

Figure 3
NRCS Web Soil Survey Map
Creekside Crossing
Village of Pleasant Prairie
Kenosha County, WI

Data Source:
USGS, NRCS Web Soil Survey

0 150 300

1 inch = 300 feet

R.A. Smith National
Beyond Surveying and Engineering

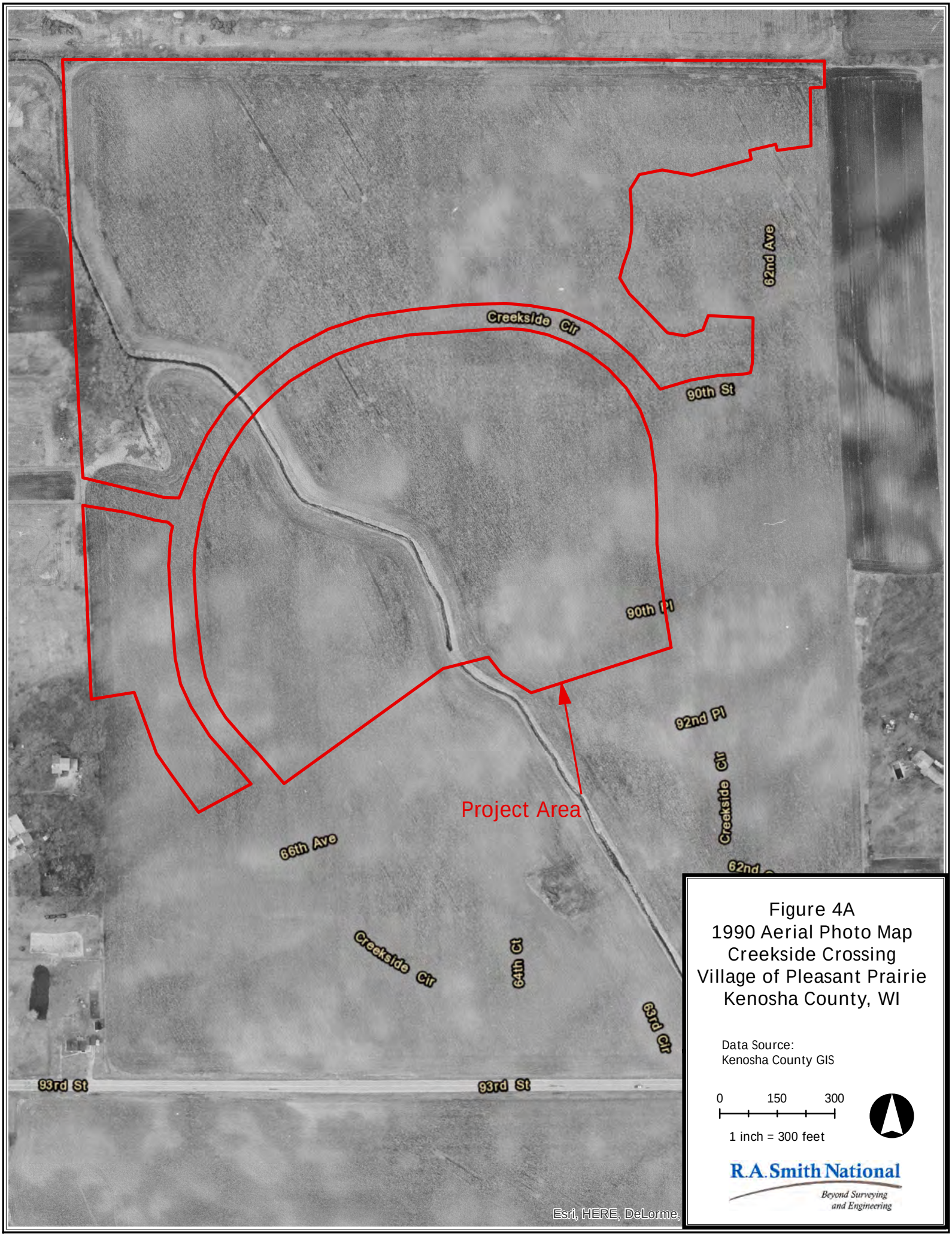

Figure 4A
1990 Aerial Photo Map
Creekside Crossing
Village of Pleasant Prairie
Kenosha County, WI

Data Source:
Kenosha County GIS

0 150 300

1 inch = 300 feet

R.A. Smith National
Beyond Surveying and Engineering

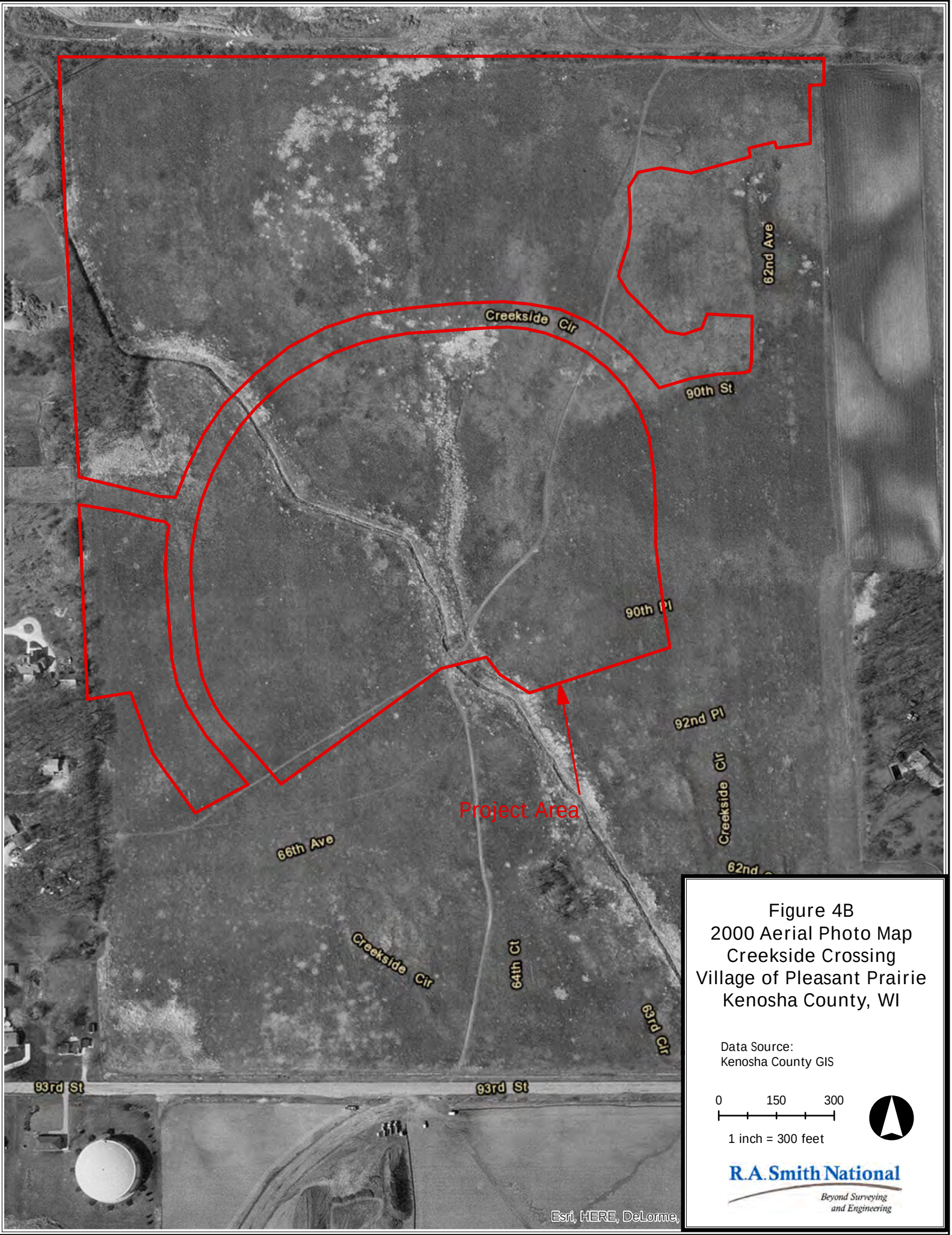

Figure 4B
2000 Aerial Photo Map
Creekside Crossing
Village of Pleasant Prairie
Kenosha County, WI

Data Source:
Kenosha County GIS

0 150 300

1 inch = 300 feet

R.A. Smith National
Beyond Surveying and Engineering

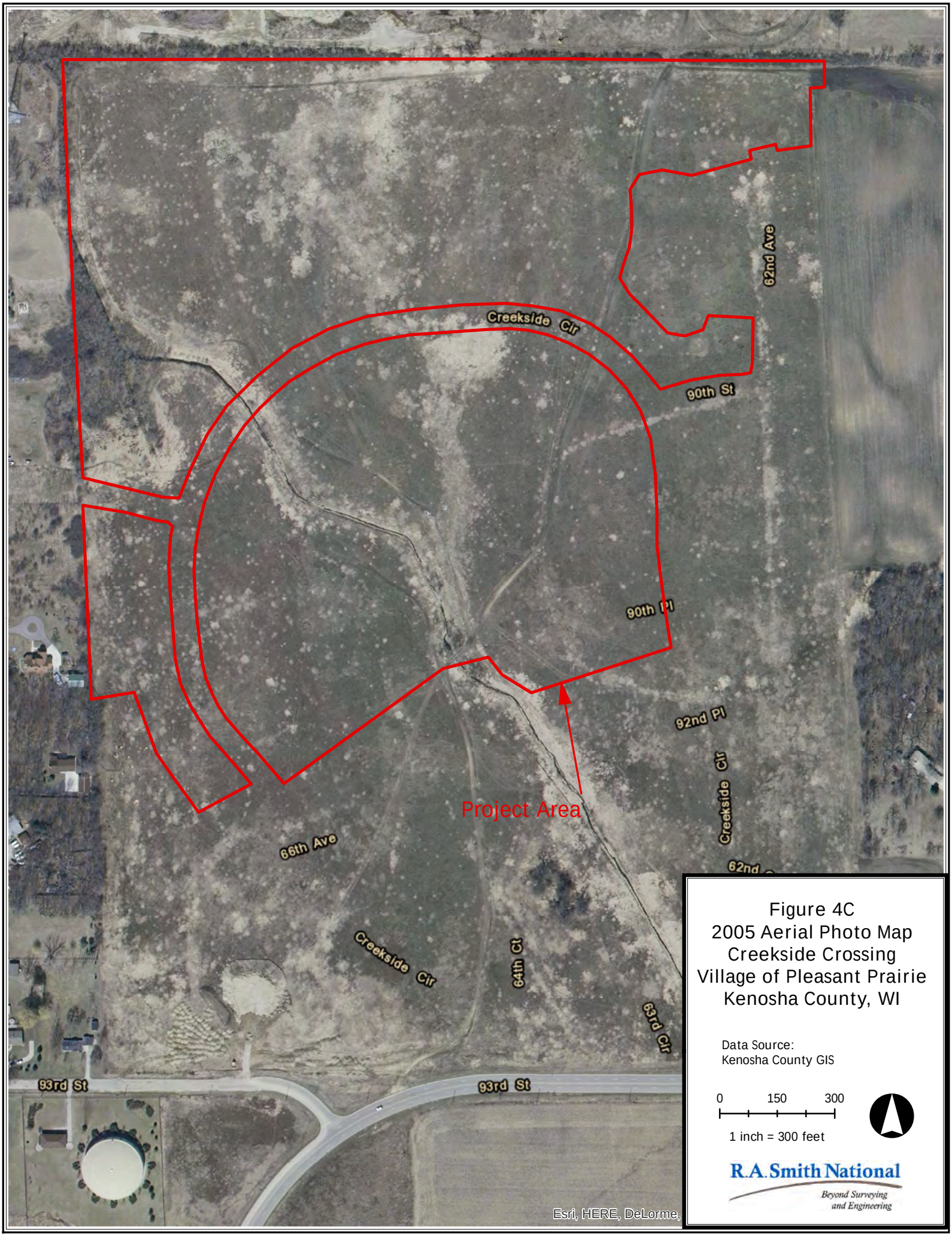

Figure 4C
2005 Aerial Photo Map
Creekside Crossing
Village of Pleasant Prairie
Kenosha County, WI

Data Source:
Kenosha County GIS

0 150 300

1 inch = 300 feet

R.A. Smith National
Beyond Surveying and Engineering

Figure 4D
2010 Aerial Photo Map
Creekside Crossing
Village of Pleasant Prairie
Kenosha County, WI

Data Source:
Kenosha County GIS

0 150 300

1 inch = 300 feet

R.A. Smith National
Beyond Surveying and Engineering

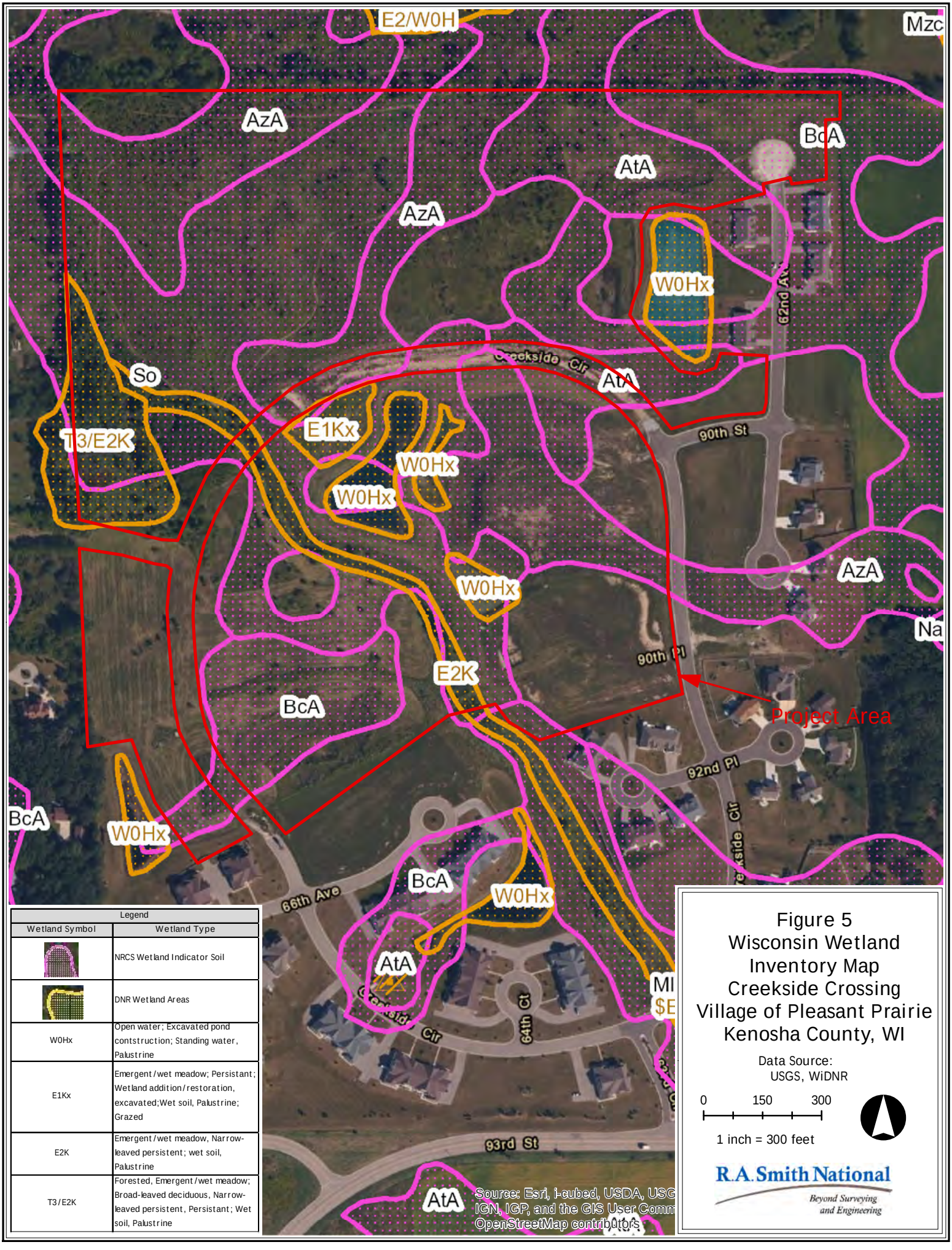

Legend	
Wetland Symbol	Wetland Type
	NRCS Wetland Indicator Soil
	DNR Wetland Areas
W0Hx	Open water; Excavated pond contstruction; Standing water, Palustrine
E1Kx	Emergent/wet meadow; Persistant; Wetland addition/restoration, excavated;Wet soil, Palustrine; Grazed
E2K	Emergent/wet meadow, Narrow-leaved persistent; wet soil, Palustrine
T3/E2K	Forested, Emergent/wet meadow; Broad-leaved deciduous, Narrow-leaved persistent, Persistant; Wet soil, Palustrine

Figure 5
Wisconsin Wetland Inventory Map
Creekside Crossing
Village of Pleasant Prairie
Kenosha County, WI

Data Source:
USGS, WiDNR

0 150 300

1 inch = 300 feet

R.A. Smith National
Beyond Surveying and Engineering

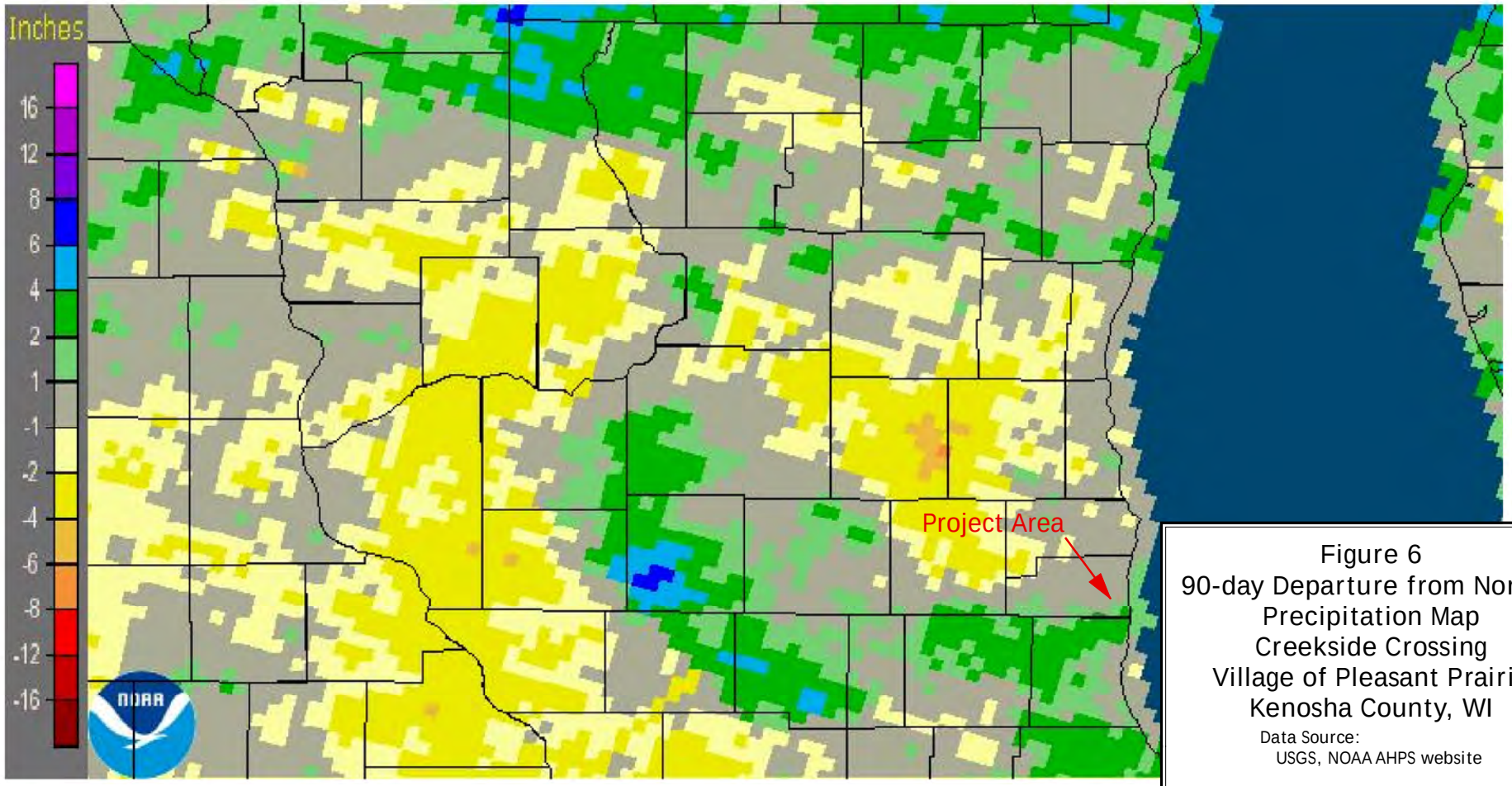

Figure 6
90-day Departure from Normal Precipitation Map
Creekside Crossing
Village of Pleasant Prairie
Kenosha County, WI

Data Source:
USGS, NOAA AHPS website

NOT TO SCALE

R.A. Smith National
Beyond Surveying and Engineering

The project area falls within -1" to 1" of the normal precipitation range.

Appendix 2:

Site Photographs

Photograph 3 (10/21/14): North facing view of the south end of W-3. W-3 is a man-made drainage feature that conveys water westerly into the stormwater pond.

Photograph 4 (10/21/14): West facing view of the active stormwater pond that receives water from W-3.

Photograph 5 (10/20/14): East facing view of W-4. W-4 is a degraded fresh (wet) meadow that was likely created during past grading activities. It is evident in the photo that water is perched on a heavy clay layer.

Photograph 6 (10/20/14): West facing view of W-5. W-5 is a farmed wetland in an active corn field. There is little vegetation present due to seasonal saturation/inundation.

Photograph 7 (10/23/14): Northwest view of W-6, along the stream bank of the unnamed tributary of Jerome Creek.

Photograph 8 (10/23/14): South facing view of W-6, where the fresh (wet) meadow on the western edge of the project area transitions to the degraded mixed hardwood forest to the east.

Photograph 9 (10/20/14): North facing view of W-7. W-7 is a degraded fresh (wet) meadow and hardwood swamp that continues to the north, off-site.

Photograph 10 (10/20/14): West facing view of W-8. W-8 is a fresh (wet) meadow that was likely created during past grading activities in 2005-2006.

Photograph 11 (10/20/14): Southwest facing view of W-9. W-9 is very small, and was likely created during past grading activities in 2005-2006.

Photograph 12 (10/20/14): Northwest facing view of W-10. W-10 is a depressional, degraded fresh (wet) meadow.

Photograph 13 (10/23/14): West facing view of W-11. W-11 is a degraded fresh (wet) meadow in a large man-made depression from past grading activities in 2005-2006. It is evident in this photo that water is perched on a heavy clay layer.

Photograph 14 (10/23/14): East facing view of W-12. W-12 is a degraded, depressional fresh (wet) meadow that is occasionally mowed.

Photograph 15 (10/23/14): North facing view of W-13. W-13 is a degraded, depressional fresh (wet) meadow that was likely created during past grading activities.

Photograph 16 (10/23/14): North facing view of W-14. W-14 is a degraded, depressional fresh (wet) meadow likely created during past grading activities in 2005-2006.

Photograph 17 (10/23/14): East facing view of the eastern half of W-15. W-15 is a fresh (wet) meadow/shrub-carr in a depressional area which was likely the result of past grading activities.

Photograph 18 (10/23/14): West facing view of the western end of W-15.

Appendix 3:

Wetland Determination Data Forms – Midwest Region

WETLAND DETERMINATION DATA FORM - Midwest Region

Project/Site: **Creekside Crossing** City/County: **Pleasant Prairie / Kenosha** Sampling Date: **Oct 13th, 2014**

Applicant/Owner: **Bear Development, LLC** State: **WI** Sampling Point: **DP-1 (upl)**

Investigator(s): **Heather Patti, Nancy Wilson** Section, Township, Range: **SW 1/4 Sec 15, T1N R22E**

Landform (hillslope, terrace, etc.): **terrace** Local relief (concave, convex, none): **none - flat**

Slope (%): **0%** Lat: Long: Datum:

Soil Map Unit Name: **Ashkum silty clay loam (AtA),hydric** WWI Classification: **none**

Are climatic / hydrologic conditions on the site typical for this time of year? Yes **X** No (if no, explain in Remarks)

Are Vegetation **Y*** Soil **N** or Hydrology **N** significantly disturbed? Are "Normal Circumstances" present? Yes No **X**

Are Vegetation **N** Soil **N** or Hydrology **N** naturally problematic? (if needed, explain any answers in Remarks)

SUMMARY OF FINDINGS --- Attach site map showing sampling point locations, transects, important features, etc.

Hydrophytic Vegetation Present?	Yes	No **X**	Is the Sampled Area		
Hydric Soil Present?	Yes	No **X**	within a Wetland?	Yes	No **X**
Wetland Hydrology Present?	Yes	No **X**	If yes, optional wetland site ID:		

Remarks: **This is an upland old field that gets occasionally mowed as it is within the Creekside Circle ROW.**

VEGETATION - Use scientific names for plants.

Sampling Point: **DP-1 (upl)**

Tree Stratum (Plot size: **30'R**)	Absolute % Cover	Dominant Species	Indicator Status
1. **-**			
2.			
3.			
4.			
5.			
6.			
7.			
	0%	= Total Cover	

Sapling/Shrub Stratum (Plot size: **15'R**)			
1.			
2.			
3.			
4.			
5.			
6.			
7.			
	0%	= Total Cover	

Herb Stratum (Plot size: **5'R**)			
1. ***Poa pratensis***	**60%**	**Y**	**FAC**
2. ***Dactylis glomerata***	**30%**	**Y**	**FACU**
3. ***Daucus carota***	**15%**	**N**	**UPL**
4. ***Melilotus albus***	**10%**	**N**	**FACU**
5. ***Cirsium arvense***	**5%**	**N**	**FACU**
6.			
7.			
8.			
9.			
10.			
11.			
12.			
13.			
14.			
	120%	= Total Cover	

Woody Vine Stratum (Plot size: **30'R**)			
1. **-**			
2.			
3.			
4.			
	0%	= Total Cover	

Dominance Test Worksheet:

Number of Dominant Species That Are OBL, FACW, or FAC: **1** (A)

Total Number of Dominant Species Across All Strata: **2** (B)

Percent of Dominant Species That Are OBL, FACW, or FAC: **50%** (A/B)

Prevalence Index Worksheet:

Total % Cover of:		Multiply by:	
OBL species	**0**	x 1 = **0**	
FACW species	**0**	x 2 = **0**	
FAC species	**60**	x 3 = **180**	
FACU species	**45**	x 4 = **180**	
UPL species	**15**	x 5 = **75**	
Column Totals:	**120** (A)	**435**	(B)

Prevalence Index B/A = **3.6**

Hydrophytic Vegetation Indicators:

- Rapid Test for Hydrophitic Vegetation
- Dominance Test is >50%
- Prevalence Index is ≤ 3.0[1]
- Morphological Adaptations[1] (Provide supporting data in Remarks or on separate sheet)
- Problematic Hydrophytic Vegetation[1] (Explain)

[1] Indicators of hydric soil and wetland hydrology must be present, unless disturbed or problematic.

Hydrophytic Vegetation Present? Yes No **X**

Remarks: **This is an old field that gets mowed occasionally. The hydrophytic vegetation criterion is not met.**

SOIL Sampling Point: **DP-1 (upl)**

Profile Description: (Describe to the depth needed to document the indicator or confirm the absence of indicators.)

Depth	Matrix		Redox Features					
(inches)	Color (moist)	%	Color (moist)	%	Type[1]	Loc[2]	Texture	Remarks
0-8*	**10YR 3/2**	**70**	**-**	**-**			**silty clay**	***The soils contain fill and are**
	10YR 4/3	**30**						**mixed from site grading.**

[1] Type: C=Concentration, D=Depletion, RM=Reduced Matrix, CS=Covered or Coated Sand Grains. [2] Location: PL=Pore Lining, M=Matrix

Hydric Soil Indicators:

- ___ Histosol (A1)
- ___ Histic Epipedon (A2)
- ___ Black Histic (A3)
- ___ Hydrogen Sulfide (A4)
- ___ Stratified Layers (A5)
- ___ 2 cm Much (A10)
- ___ Depleted Below Dark Surface (A11)
- ___ Thick Dark Surface (A12)
- ___ Sandy Mucky Mineral (S1)
- ___ Sandy Gleyed Matrix (S4)
- ___ Sandy Redox (S5)
- ___ Stripped Matrix (S6)
- ___ Loamy Mucky Mineral (F1)
- ___ Loamy Gleyed Matrix (F2)
- ___ Depleted Matrix (F3)
- ___ Redox Dark Surface (F6)
- ___ Depleted Dark Surface (F7)
- ___ Redox Depressions (F8)

Indicators for Problematic Hydric Soils[3]:

- ___ Coast Prairie Redox (A16) **(LRR,K,L,R)**
- ___ Dark Surface (S7) **(LRR,K,L)**
- ___ 5 cm mucky peat or peat (S3) **(LRR,K,L)**
- ___ Iron-Manganese Masses (F12) **(LRR,K,L,R)**
- ___ Very Shallow Dark Surface (TF12)
- ___ Other (Explain in Remarks)

[3] Indicators of hydrophytic evegetation and wetland hydrology must be present, unless disturbed or problematic.

Restrictive Layer (if observed):

Type: **gravel fill**

Depth (inches): **8"**

Hydric Soil Present? **Yes** ___ **No** **X**

Remarks: **Compact fille prevents observations of the soil profile past 8". Based on the lack of vegetation and wetland hydrology indicators, the hydric soil criterion is likely not met.**

HYDROLOGY

Wetland Hydrology Indicators:

Primary Indicators (minimum of one is required; check all that apply)

- ___ Surface Water (A1)
- ___ High Water Table (A2)
- ___ Saturation (A3)
- ___ Water Marks (B1)
- ___ Sediment Deposits (B2)
- ___ Drift Deposits (B3)
- ___ Algal Mat or Crust (B4)
- ___ Iron Deposits (B5)
- ___ Inundation Visible on Aerial Imagery (B7)
- ___ Sparsely Vegetated Concave Surface (B8)
- ___ Water-Stained Leaves (B9)
- ___ Aquatic Fauna (B13)
- ___ True Aquatic Plants (B14)
- ___ Hydrogen Sulfide Odor (C1)
- ___ Oxidized Rhizospheres on Living Roots (C3)
- ___ Presence of Reduced Iron (C4)
- ___ Recent Iron Reduction in Tilled Soils (C6)
- ___ Thin Muck Surface (C7)
- ___ Gauge or Well Data (D9)
- ___ Other (Explain in Remarks)

Secondary Indicators (minimum of two required)

- ___ Surface Soil Cracks (B6)
- ___ Drainage Patterns (B10)
- ___ Dry-Season Water Table (C2)
- ___ Crayfish Burrows (C8)
- ___ Saturation Visible on Aerial Imagery (C9)
- ___ Stunted or Stressed Plants (D1)
- ___ Geomorphic Position (D2)
- ___ FAC-Neutral Test (D5)

Field Observations:

Surface Water Present? Yes ___ No **X** Depth (inches): ___

Water Table Present? Yes ___ No **X** Depth (inches): ___

Saturation Present? (includes capillary fringe) Yes ___ No **X** Depth (inches): ___

Wetland Hydrology Present? **Yes** ___ **No** **X**

Describe Recorded Data (stream gauge, monitoring well, aerial photos, previous inspections), if available:

Local WETS table, NOAA's AHPS map, NRCS Soils Map, recent aerial photos

Remarks: **There is no hydrology in this area. The criterion is not met.**

WETLAND DETERMINATION DATA FORM - Midwest Region

Project/Site: **Creekside Crossing** City/County: **Pleasant Prairie / Kenosha** Sampling Date: **Oct 13th, 2014**

Applicant/Owner: **Bear Development, LLC** State: **WI** Sampling Point: **DP-2 (upl)**

Investigator(s): **Heather Patti, Nancy Wilson** Section, Township, Range: **SW 1/4 Sec 15, T1N R22E**

Landform (hillslope, terrace, etc.): **terrace** Local relief (concave, convex, none): **none- flat**

Slope (%): **0%** Lat: Long: Datum:

Soil Map Unit Name: **Beecher silt loam (BcA), 1-3% slopes , hydric via inclusions** WWI Classification: **none**

Are climatic / hydrologic conditions on the site typical for this time of year? Yes **X** No (if no, explain in Remarks)

Are Vegetation **N** Soil **N** or Hydrology **N** significantly disturbed? Are "Normal Circumstances" present? Yes **X** No

Are Vegetation **N** Soil **N** or Hydrology **N** naturally problematic? (if needed, explain any answers in Remarks)

SUMMARY OF FINDINGS --- Attach site map showing sampling point locations, transects, important features, etc.

Hydrophytic Vegetation Present?	Yes		No	**X**	Is the Sampled Area within a Wetland? Yes No **X**
Hydric Soil Present?	Yes		No	**X**	If yes, optional wetland site ID:
Wetland Hydrology Present?	Yes		No	**X**	

Remarks: **This is an upland field dominated by Kentucky blue grass and Canada goldenrod.**

VEGETATION - Use scientific names for plants.

Sampling Point: **DP-2 (upl)**

Tree Stratum (Plot size: **30'R**)	Absolute % Cover	Dominant Species	Indicator Status
1. **-**			
2.			
3.			
4.			
5.			
6.			
7.			
	0%	= Total Cover	

Sapling/Shrub Stratum (Plot size: **15'R**)			
1. ***Rosa multiflora***	**10%**	**Y**	**FACU**
2.			
3.			
4.			
5.			
6.			
7.			
	5%	= Total Cover	

Herb Stratum (Plot size: **5'R**)			
1. ***Poa pratensis***	**50%**	**Y**	**FAC**
2. ***Solidago canadensis***	**50%**	**Y**	**FACU**
3. ***Daucus carota***	**15%**	**N**	**UPL**
4. ***Dactylis glomerata***	**10%**	**N**	**FACU**
5. ***Aster pilosus***	**10%**	**N**	**FACU**
6. ***Cirsium arvense***	**5%**	**N**	**FACU**
7.			
8.			
9.			
10.			
11.			
12.			
13.			
14.			
	140%	= Total Cover	

Woody Vine Stratum (Plot size: **30'R**)			
1. **-**			
2.			
3.			
4.			
	0%	= Total Cover	

Dominance Test Worksheet:

Number of Dominant Species That Are OBL, FACW, or FAC: **1** (A)

Total Number of Dominant Species Across All Strata: **3** (B)

Percent of Dominant Species That Are OBL, FACW, or FAC: **33%** (A/B)

Prevalence Index Worksheet:

Total % Cover of:		Multiply by:	
OBL species		x 1 =	
FACW species		x 2 =	
FAC species		x 3 =	
FACU species		x 4 =	
UPL species		x 5 =	
Column Totals:	(A)		(B)

Prevalence Index B/A =

Hydrophytic Vegetation Indicators:

- Rapid Test for Hydrophitic Vegetation
- Dominance Test is >50%
- Prevalence Index is ≤ 3.0[1]
- Morphological Adaptations[1] (Provide supporting data in Remarks or on separate sheet)
- Problematic Hydrophytic Vegetation[1] (Explain)

[1] Indicators of hydric soil and wetland hydrology must be present, unless disturbed or problematic.

Hydrophytic Vegetation Present? Yes No **X**

Remarks: **This is an old field that gets mowed occasionally. The hydrophytic vegetation criterion is not met.**

SOIL Sampling Point: **DP-2 (upl)**

Profile Description: (Describe to the depth needed to document the indicator or confirm the absence of indicators.)

Depth (inches)	Matrix Color (moist)	%	Redox Features Color (moist)	%	Type[1]	Loc[2]	Texture	Remarks
0-8	**10YR 3/2**	**70**	**-**	**-**			**silty clay**	***The soils are mixed from site**
	10YR 4/3	**30**						**grading.**
8-13*	**10YR 5/3**	**90**	**10YR 5/6**	**10**	**C**	**M**	**silty clay**	

[1] Type: C=Concentration, D=Depletion, RM=Reduced Matrix, CS=Covered or Coated Sand Grains. [2] Location: PL=Pore Lining, M=Matrix

Hydric Soil Indicators:

- ___ Histosol (A1)
- ___ Histic Epipedon (A2)
- ___ Black Histic (A3)
- ___ Hydrogen Sulfide (A4)
- ___ Stratified Layers (A5)
- ___ 2 cm Much (A10)
- ___ Depleted Below Dark Surface (A11)
- ___ Thick Dark Surface (A12)
- ___ Sandy Mucky Mineral (S1)
- ___ Sandy Gleyed Matrix (S4)
- ___ Sandy Redox (S5)
- ___ Stripped Matrix (S6)
- ___ Loamy Mucky Mineral (F1)
- ___ Loamy Gleyed Matrix (F2)
- ___ Depleted Matrix (F3)
- ___ Redox Dark Surface (F6)
- ___ Depleted Dark Surface (F7)
- ___ Redox Depressions (F8)

Indicators for Problematic Hydric Soils[3]:

- ___ Coast Prairie Redox (A16) **(LRR,K,L,R)**
- ___ Dark Surface (S7) **(LRR,K,L)**
- ___ 5 cm mucky peat or peat (S3) **(LRR,K,L)**
- ___ Iron-Manganese Masses (F12) **(LRR,K,L,R)**
- ___ Very Shallow Dark Surface (TF12)
- ___ Other (Explain in Remarks)

[3] Indicators of hydrophytic evegetation and wetland hydrology must be present, unless disturbed or problematic.

Restrictive Layer (if observed):

Type: **compact clay**

Depth (inches): **13"**

Hydric Soil Present? **Yes** ___ **No** **X**

Remarks: **Compact fill/clay prevents observations of the soil profile past 13". Regardless, the hydric soil criterion is not met.**

HYDROLOGY

Wetland Hydrology Indicators:

Primary Indicators (minimum of one is required; check all that apply)

- ___ Surface Water (A1)
- ___ High Water Table (A2)
- ___ Saturation (A3)
- ___ Water Marks (B1)
- ___ Sediment Deposits (B2)
- ___ Drift Deposits (B3)
- ___ Algal Mat or Crust (B4)
- ___ Iron Deposits (B5)
- ___ Inundation Visible on Aerial Imagery (B7)
- ___ Sparsely Vegetated Concave Surface (B8)
- ___ Water-Stained Leaves (B9)
- ___ Aquatic Fauna (B13)
- ___ True Aquatic Plants (B14)
- ___ Hydrogen Sulfide Odor (C1)
- ___ Oxidized Rhizospheres on Living Roots (C3)
- ___ Presence of Reduced Iron (C4)
- ___ Recent Iron Reduction in Tilled Soils (C6)
- ___ Thin Muck Surface (C7)
- ___ Gauge or Well Data (D9)
- ___ Other (Explain in Remarks)

Secondary Indicators (minimum of two required)

- ___ Surface Soil Cracks (B6)
- ___ Drainage Patterns (B10)
- ___ Dry-Season Water Table (C2)
- ___ Crayfish Burrows (C8)
- ___ Saturation Visible on Aerial Imagery (C9)
- ___ Stunted or Stressed Plants (D1)
- ___ Geomorphic Position (D2)
- ___ FAC-Neutral Test (D5)

Field Observations:

Surface Water Present? Yes ___ No **X** Depth (inches): ___

Water Table Present? Yes ___ No **X** Depth (inches): ___

Saturation Present? (includes capillary fringe) Yes ___ No **X** Depth (inches): ___

Wetland Hydrology Present? **Yes** ___ **No** **X**

Describe Recorded Data (stream gauge, monitoring well, aerial photos, previous inspections), if available:

Local WETS table, NOAA's AHPS map, NRCS Soils Map, recent aerial photos

Remarks: **There is no hydrology in this area. The criterion is not met.**

WETLAND DETERMINATION DATA FORM - Midwest Region

Project/Site: **Creekside Crossing** City/County: **Pleasant Prairie / Kenosha** Sampling Date: **Oct 13th, 2014**

Applicant/Owner: **Bear Development, LLC** State: **WI** Sampling Point: **DP-3 (wtd)**

Investigator(s): **Heather Patti, Nancy Wilson** Section, Township, Range: **SW 1/4 Sec 15, T1N R22E**

Landform (hillslope, terrace, etc.): **wetland depression** Local relief (concave, convex, none): **concave**

Slope (%): **-** Lat: Long: Datum:

Soil Map Unit Name: **Beecher silt loam (BcA), 1-3% slopes , hydric via inclusions** WWI Classification: **none**

Are climatic / hydrologic conditions on the site typical for this time of year? Yes **X** No (if no, explain in Remarks)

Are Vegetation **N** Soil **N** or Hydrology **N** significantly disturbed? Are "Normal Circumstances" present? Yes **X** No

Are Vegetation **N** Soil **N** or Hydrology **Y*** naturally problematic? (if needed, explain any answers in Remarks)

SUMMARY OF FINDINGS --- Attach site map showing sampling point locations, transects, important features, etc.

Hydrophytic Vegetation Present?	Yes **X**	No	Is the Sampled Area		
Hydric Soil Present?	Yes **X**	No	within a Wetland?	Yes **X**	No
Wetland Hydrology Present?	Yes **X**	No	If yes, optional wetland site ID:	**W-1**	

Remarks: **This is a degraded fresh (wet) meadow dominated by Phragmites. *This is a depressional area that recieves seasonal hydrology, thus making it naturally problematic. All three of the criteria are met.**

VEGETATION - Use scientific names for plants.

Sampling Point: **DP-3 (wtd)**

Tree Stratum (Plot size: **30'R**)	Absolute % Cover	Dominant Species	Indicator Status
1. **-**			
2.			
3.			
4.			
5.			
6.			
7.			
	0% = Total Cover		

Sapling/Shrub Stratum (Plot size: **15'R**)			
1.			
2.			
3.			
4.			
5.			
6.			
7.			
	0% = Total Cover		

Herb Stratum (Plot size: **5'R**)			
1. ***Phalaris arundinacea***	**50%**	**Y**	**FACW**
2. ***Phragmites australis***	**60%**	**Y**	**FACW**
3. ***Euthamia graminifolia***	**10%**	**N**	**FACW**
4.			
5.			
6.			
7.			
8.			
9.			
10.			
11.			
12.			
13.			
14.			
	120% = Total Cover		

Woody Vine Stratum (Plot size: **30'R**)			
1. **-**			
2.			
3.			
4.			
	0% = Total Cover		

Dominance Test Worksheet:

Number of Dominant Species That Are OBL, FACW, or FAC: **3** (A)

Total Number of Dominant Species Across All Strata: **3** (B)

Percent of Dominant Species That Are OBL, FACW, or FAC: **100** (A/B)

Prevalence Index Worksheet:

Total % Cover of:		Multiply by:	
OBL species		x 1 =	
FACW species		x 2 =	
FAC species		x 3 =	
FACU species		x 4 =	
UPL species		x 5 =	
Column Totals:	(A)		(B)

Prevalence Index B/A =

Hydrophytic Vegetation Indicators:

- Rapid Test for Hydrophitic Vegetation
- **X** Dominance Test is >50%
- Prevalence Index is ≤ 3.0[1]
- Morphological Adaptations[1] (Provide supporting data in Remarks or on separate sheet)
- Problematic Hydrophytic Vegetation[1] (Explain)

[1] Indicators of hydric soil and wetland hydrology must be present, unless disturbed or problematic.

Hydrophytic Vegetation Present? Yes **X** No

Remarks: **This is a fresh (wet) meadow dominated by giant reed grass. The hydrophytic vegetation criterion is met.**

SOIL Sampling Point: **DP-3 (wtd)**

Profile Description: (Describe to the depth needed to document the indicator or confirm the absence of indicators.)

Depth	Matrix		Redox Features					
(inches)	Color (moist)	%	Color (moist)	%	Type[1]	Loc[2]	Texture	Remarks
0-3	10YR 3/1	100	-	-			silty clay	some gravel fill present throughout
3-14	10YR 3/1	85	10YR 5/8	15	C	M	silty clay	profile
14-20+	10YR 5/2	80	10YR 5/6	20	C	M	silty clay	

[1] Type: C=Concentration, D=Depletion, RM=Reduced Matrix, CS=Covered or Coated Sand Grains. [2] Location: PL=Pore Lining, M=Matrix

Hydric Soil Indicators:

- ___ Histosol (A1)
- ___ Histic Epipedon (A2)
- ___ Black Histic (A3)
- ___ Hydrogen Sulfide (A4)
- ___ Stratified Layers (A5)
- ___ 2 cm Much (A10)
- ___ Depleted Below Dark Surface (A11)
- ___ Thick Dark Surface (A12)
- ___ Sandy Mucky Mineral (S1)
- ___ Sandy Gleyed Matrix (S4)
- ___ Sandy Redox (S5)
- ___ Stripped Matrix (S6)
- ___ Loamy Mucky Mineral (F1)
- ___ Loamy Gleyed Matrix (F2)
- ___ Depleted Matrix (F3)
- X Redox Dark Surface (F6)
- ___ Depleted Dark Surface (F7)
- ___ Redox Depressions (F8)

Indicators for Problematic Hydric Soils[3]:

- ___ Coast Prairie Redox (A16) **(LRR,K,L,R)**
- ___ Dark Surface (S7) **(LRR,K,L)**
- ___ 5 cm mucky peat or peat (S3) **(LRR,K,L)**
- ___ Iron-Manganese Masses (F12) **(LRR,K,L,R)**
- ___ Very Shallow Dark Surface (TF12)
- ___ Other (Explain in Remarks)

[3] Indicators of hydrophytic evegetation and wetland hydrology must be present, unless disturbed or problematic.

Restrictive Layer (if observed):

Type: **n/a**

Depth (inches): **n/a**

Hydric Soil Present? **Yes** X **No** ___

Remarks: **The hydric soil criterion is met. Some gravel fill present from historic grading activities.**

HYDROLOGY

Wetland Hydrology Indicators:

Primary Indicators (minimum of one is required; check all that apply)

- ___ Surface Water (A1)
- ___ High Water Table (A2)
- X Saturation (A3)
- ___ Water Marks (B1)
- ___ Sediment Deposits (B2)
- ___ Drift Deposits (B3)
- ___ Algal Mat or Crust (B4)
- ___ Iron Deposits (B5)
- ___ Inundation Visible on Aerial Imagery (B7)
- ___ Sparsely Vegetated Concave Surface (B8)
- ___ Water-Stained Leaves (B9)
- ___ Aquatic Fauna (B13)
- ___ True Aquatic Plants (B14)
- ___ Hydrogen Sulfide Odor (C1)
- ___ Oxidized Rhizospheres on Living Roots (C3)
- ___ Presence of Reduced Iron (C4)
- ___ Recent Iron Reduction in Tilled Soils (C6)
- ___ Thin Muck Surface (C7)
- ___ Gauge or Well Data (D9)
- ___ Other (Explain in Remarks)

Secondary Indicators (minimum of two required)

- ___ Surface Soil Cracks (B6)
- ___ Drainage Patterns (B10)
- X Dry-Season Water Table (C2)
- ___ Crayfish Burrows (C8)
- ___ Saturation Visible on Aerial Imagery (C9)
- ___ Stunted or Stressed Plants (D1)
- X Geomorphic Position (D2)
- X FAC-Neutral Test (D5)

Field Observations:

Surface Water Present?	Yes	___	No	X	Depth (inches): ___
Water Table Present?	Yes	X	No	___	Depth (inches): 17
Saturation Present? (includes capillary fringe)	Yes	X	No	___	Depth (inches): 0

Wetland Hydrology Present? **Yes** X **No** ___

Describe Recorded Data (stream gauge, monitoring well, aerial photos, previous inspections), if available:

Local WETS table, NOAA's AHPS map, NRCS Soils Map, recent aerial photos

Remarks: **The water table is present at 17" with saturation at the surface. Multiple secondary, hydrology indicators are present as well.**

WETLAND DETERMINATION DATA FORM - Midwest Region

Project/Site: **Creekside Crossing** City/County: **Pleasant Prairie / Kenosha** Sampling Date: **Oct 20th, 2014**

Applicant/Owner: **Bear Development, LLC** State: **WI** Sampling Point: **DP-4 (upl)**

Investigator(s): **Heather Patti, Nancy Wilson** Section, Township, Range: **SW 1/4 Sec 15, T1N R22E**

Landform (hillslope, terrace, etc.): **hillslope** Local relief (concave, convex, none): **convex**

Slope (%): **15%** Lat: Long: Datum:

Soil Map Unit Name: **Beecher silt loam (BcA), 1-3% slopes , hydric via inclusions** WWI Classification: **none**

Are climatic / hydrologic conditions on the site typical for this time of year? Yes **X** No (if no, explain in Remarks)

Are Vegetation **Y*** Soil **N** or Hydrology **N** significantly disturbed? Are "Normal Circumstances" present? Yes No **X**

Are Vegetation **N** Soil **N** or Hydrology **N** naturally problematic? (if needed, explain any answers in Remarks)

SUMMARY OF FINDINGS --- Attach site map showing sampling point locations, transects, important features, etc.

Hydrophytic Vegetation Present?	Yes	No **X**	Is the Sampled Area		
Hydric Soil Present?	Yes	No **X**	within a Wetland?	Yes	No **X**
Wetland Hydrology Present?	Yes	No **X**	If yes, optional wetland site ID:		

Remarks: **This is an upland field dominated by Kentucky blue grass and dandelions. *This area occasionally gets mowed, but the vegetation is still identifiable. The area slopes downwards toward W-2.**

VEGETATION - Use scientific names for plants.

Sampling Point: **DP-4 (upl)**

Tree Stratum (Plot size: **30'R**)	Absolute % Cover	Dominant Species	Indicator Status
1. **-**			
2.			
3.			
4.			
5.			
6.			
7.			
	0%	= Total Cover	

Sapling/Shrub Stratum (Plot size: **15'R**)			
1. ***Rosa multiflora***	**5%**	**Y**	**FACU**
2.			
3.			
4.			
5.			
6.			
7.			
	5%	= Total Cover	

Herb Stratum (Plot size: **5'R**)			
1. ***Poa pratensis***	**60%**	**Y**	**FAC**
2. ***Taraxacum officinale***	**25%**	**Y**	**FACU**
3. ***Daucus carota***	**15%**	**N**	**UPL**
4. ***Melilotus albus***	**10%**	**N**	**FACU**
5. ***Rosa multiflora***	**10%**	**N**	**FACU**
6. ***Aster pilosus***	**10%**	**N**	**FACU**
7. ***Cirsium arvense***	**5%**	**N**	**FACU**
8.			
9.			
10.			
11.			
12.			
13.			
14.			
	135%	= Total Cover	

Woody Vine Stratum (Plot size: **30'R**)			
1. **-**			
2.			
3.			
4.			
	0%	= Total Cover	

Dominance Test Worksheet:

Number of Dominant Species That Are OBL, FACW, or FAC: **1** (A)

Total Number of Dominant Species Across All Strata: **3** (B)

Percent of Dominant Species That Are OBL, FACW, or FAC: **33%** (A/B)

Prevalence Index Worksheet:

Total % Cover of:		Multiply by:	
OBL species		x 1 =	
FACW species		x 2 =	
FAC species		x 3 =	
FACU species		x 4 =	
UPL species		x 5 =	
Column Totals:	(A)		(B)

Prevalence Index B/A =

Hydrophytic Vegetation Indicators:

- Rapid Test for Hydrophitic Vegetation
- Dominance Test is >50%
- Prevalence Index is ≤ 3.0[1]
- Morphological Adaptations[1] (Provide supporting data in Remarks or on separate sheet)
- Problematic Hydrophytic Vegetation[1] (Explain)

[1] Indicators of hydric soil and wetland hydrology must be present, unless disturbed or problematic.

Hydrophytic Vegetation Present? Yes No **X**

Remarks: **This is an old field that gets mowed occasionally. The hydrophytic vegetation criterion is not met.**

SOIL Sampling Point: **DP-4 (upl)**

Profile Description: (Describe to the depth needed to document the indicator or confirm the absence of indicators.)

Depth (inches)	Matrix Color (moist)	%	Redox Features Color (moist)	%	Type[1]	Loc[2]	Texture	Remarks
0-8	**10YR 3/2**	**70**	**-**	**-**			**silty clay**	***The soils are mixed from site**
	10YR 4/3	**30**						**grading.**
8-13*	**10YR 5/3**	**90**	**10YR 5/6**	**10**	**C**	**M**	**silty clay**	

[1] Type: C=Concentration, D=Depletion, RM=Reduced Matrix, CS=Covered or Coated Sand Grains. [2] Location: PL=Pore Lining, M=Matrix

Hydric Soil Indicators:

- ___ Histosol (A1)
- ___ Histic Epipedon (A2)
- ___ Black Histic (A3)
- ___ Hydrogen Sulfide (A4)
- ___ Stratified Layers (A5)
- ___ 2 cm Much (A10)
- ___ Depleted Below Dark Surface (A11)
- ___ Thick Dark Surface (A12)
- ___ Sandy Mucky Mineral (S1)
- ___ Sandy Gleyed Matrix (S4)
- ___ Sandy Redox (S5)
- ___ Stripped Matrix (S6)
- ___ Loamy Mucky Mineral (F1)
- ___ Loamy Gleyed Matrix (F2)
- ___ Depleted Matrix (F3)
- ___ Redox Dark Surface (F6)
- ___ Depleted Dark Surface (F7)
- ___ Redox Depressions (F8)

Indicators for Problematic Hydric Soils[3]:

- ___ Coast Prairie Redox (A16) **(LRR,K,L,R)**
- ___ Dark Surface (S7) **(LRR,K,L)**
- ___ 5 cm mucky peat or peat (S3) **(LRR,K,L)**
- ___ Iron-Manganese Masses (F12) **(LRR,K,L,R)**
- ___ Very Shallow Dark Surface (TF12)
- ___ Other (Explain in Remarks)

[3] Indicators of hydrophytic evegetation and wetland hydrology must be present, unless disturbed or problematic.

Restrictive Layer (if observed):

Type: **compact clay**

Depth (inches): **13"**

Hydric Soil Present? **Yes** ___ **No** **X**

Remarks: **Compact clay prevents observations of the soil profile past 13". The hydric soil criterion is not met based on professional judgement and lack of vegetation & hydrology indicators.**

HYDROLOGY

Wetland Hydrology Indicators:

Primary Indicators (minimum of one is required; check all that apply)

- ___ Surface Water (A1)
- ___ High Water Table (A2)
- ___ Saturation (A3)
- ___ Water Marks (B1)
- ___ Sediment Deposits (B2)
- ___ Drift Deposits (B3)
- ___ Algal Mat or Crust (B4)
- ___ Iron Deposits (B5)
- ___ Inundation Visible on Aerial Imagery (B7)
- ___ Sparsely Vegetated Concave Surface (B8)
- ___ Water-Stained Leaves (B9)
- ___ Aquatic Fauna (B13)
- ___ True Aquatic Plants (B14)
- ___ Hydrogen Sulfide Odor (C1)
- ___ Oxidized Rhizospheres on Living Roots (C3)
- ___ Presence of Reduced Iron (C4)
- ___ Recent Iron Reduction in Tilled Soils (C6)
- ___ Thin Muck Surface (C7)
- ___ Gauge or Well Data (D9)
- ___ Other (Explain in Remarks)

Secondary Indicators (minimum of two required)

- ___ Surface Soil Cracks (B6)
- ___ Drainage Patterns (B10)
- ___ Dry-Season Water Table (C2)
- ___ Crayfish Burrows (C8)
- ___ Saturation Visible on Aerial Imagery (C9)
- ___ Stunted or Stressed Plants (D1)
- ___ Geomorphic Position (D2)
- ___ FAC-Neutral Test (D5)

Field Observations:

Surface Water Present? Yes ___ No **X** Depth (inches): ___

Water Table Present? Yes ___ No **X** Depth (inches): ___

Saturation Present? (includes capillary fringe) Yes ___ No **X** Depth (inches): ___

Wetland Hydrology Present? **Yes** ___ **No** **X**

Describe Recorded Data (stream gauge, monitoring well, aerial photos, previous inspections), if available:

Local WETS table, NOAA's AHPS map, NRCS Soils Map, recent aerial photos

Remarks: **There is no hydrology in this area. The criterion is not met.**

WETLAND DETERMINATION DATA FORM - Midwest Region

Project/Site: **Creekside Crossing** City/County: **Pleasant Prairie / Kenosha** Sampling Date: **Oct 20th, 2014**

Applicant/Owner: **Bear Development, LLC** State: **WI** Sampling Point: **DP-5 (wtd)**

Investigator(s): **Heather Patti, Nancy Wilson** Section, Township, Range: **SW 1/4 Sec 15, T1N R22E**

Landform (hillslope, terrace, etc.): **wetland depression** Local relief (concave, convex, none): **concave**

Slope (%): **-** Lat: Long: Datum:

Soil Map Unit Name: **Beecher silt loam (BcA), 1-3% slopes , hydric via inclusions** WWI Classification: **none**

Are climatic / hydrologic conditions on the site typical for this time of year? Yes **X** No (if no, explain in Remarks)

Are Vegetation **N** Soil **N** or Hydrology **N** significantly disturbed? Are "Normal Circumstances" present? Yes **X** No

Are Vegetation **N** Soil **N** or Hydrology **Y*** naturally problematic? (if needed, explain any answers in Remarks)

SUMMARY OF FINDINGS --- Attach site map showing sampling point locations, transects, important features, etc.

Hydrophytic Vegetation Present?	Yes **X**	No	Is the Sampled Area		
Hydric Soil Present?	Yes **X**	No	within a Wetland?	Yes **X**	No
Wetland Hydrology Present?	Yes **X**	No	If yes, optional wetland site ID:	**W-2**	

Remarks: **This is a fresh (wet) meadow the edge of which is occasionally mowed. *This is a depressional area that recieves seasonal hydrology, thus making it naturally problematic. All three of the criteria are met, however.**

VEGETATION - Use scientific names for plants.

Sampling Point: **DP-5 (wtd)**

Tree Stratum (Plot size: **30'R**)	Absolute % Cover	Dominant Species	Indicator Status
1. **-**			
2.			
3.			
4.			
5.			
6.			
7.			
	0%	= Total Cover	

Sapling/Shrub Stratum (Plot size: **15'R**)			
1. ***Populus deltoides***	**10%**	**Y**	**FAC**
2.			
3.			
4.			
5.			
6.			
7.			
	10%	= Total Cover	

Herb Stratum (Plot size: **5'R**)			
1. ***Phalaris arundinacea***	**60%**	**Y**	**FACW**
2. ***Agrostis gigantea***	**20%**	**Y**	**FACW**
3. ***Phragmites australis***	**20%**	**Y**	**FACW**
4. ***Aster puniceus***	**20%**	**Y**	**OBL**
5. ***Euthamia graminifolia***	**10%**	**N**	**FACW**
6.			
7.			
8.			
9.			
10.			
11.			
12.			
13.			
14.			
	130%	= Total Cover	

Woody Vine Stratum (Plot size: **30'R**)			
1. **-**			
2.			
3.			
4.			
	0%	= Total Cover	

Dominance Test Worksheet:

Number of Dominant Species That Are OBL, FACW, or FAC: **5** (A)

Total Number of Dominant Species Across All Strata: **5** (B)

Percent of Dominant Species That Are OBL, FACW, or FAC: **100** (A/B)

Prevalence Index Worksheet:

Total % Cover of:		Multiply by:	
OBL species		x 1 =	
FACW species		x 2 =	
FAC species		x 3 =	
FACU species		x 4 =	
UPL species		x 5 =	
Column Totals:	(A)		(B)

Prevalence Index B/A =

Hydrophytic Vegetation Indicators:

- Rapid Test for Hydrophitic Vegetation
- **X** Dominance Test is >50%
- Prevalence Index is ≤ 3.0[1]
- Morphological Adaptations[1] (Provide supporting data in Remarks or on separate sheet)
- Problematic Hydrophytic Vegetation[1] (Explain)

[1] Indicators of hydric soil and wetland hydrology must be present, unless disturbed or problematic.

Hydrophytic Vegetation Present? Yes **X** No

Remarks: **This is a fresh (wet) meadow. The hydrophytic vegetation criterion is met.**

SOIL Sampling Point: **DP-5 (wtd)**

Profile Description: (Describe to the depth needed to document the indicator or confirm the absence of indicators.)

Depth	Matrix		Redox Features					
(inches)	Color (moist)	%	Color (moist)	%	Type[1]	Loc[2]	Texture	Remarks
0-3	**10YR 3/1**	**100**	**-**	**-**			**silty clay**	
3-16	**10YR 3/1**	**85**	**10YR 5/6**	**15**	**C**	**M**	**silty clay**	
16-20+	**10YR 5/2**	**80**	**10YR 5/6**	**20**	**C**	**M**	**silty clay**	

[1] Type: C=Concentration, D=Depletion, RM=Reduced Matrix, CS=Covered or Coated Sand Grains. [2] Location: PL=Pore Lining, M=Matrix

Hydric Soil Indicators:

- ___ Histosol (A1)
- ___ Histic Epipedon (A2)
- ___ Black Histic (A3)
- ___ Hydrogen Sulfide (A4)
- ___ Stratified Layers (A5)
- ___ 2 cm Much (A10)
- ___ Depleted Below Dark Surface (A11)
- ___ Thick Dark Surface (A12)
- ___ Sandy Mucky Mineral (S1)
- ___ Sandy Gleyed Matrix (S4)
- ___ Sandy Redox (S5)
- ___ Stripped Matrix (S6)
- ___ Loamy Mucky Mineral (F1)
- ___ Loamy Gleyed Matrix (F2)
- ___ Depleted Matrix (F3)
- **X** Redox Dark Surface (F6)
- ___ Depleted Dark Surface (F7)
- ___ Redox Depressions (F8)

Indicators for Problematic Hydric Soils[3]:

- ___ Coast Prairie Redox (A16) **(LRR,K,L,R)**
- ___ Dark Surface (S7) **(LRR,K,L)**
- ___ 5 cm mucky peat or peat (S3) **(LRR,K,L)**
- ___ Iron-Manganese Masses (F12) **(LRR,K,L,R)**
- ___ Very Shallow Dark Surface (TF12)
- ___ Other (Explain in Remarks)

[3] Indicators of hydrophytic evegetation and wetland hydrology must be present, unless disturbed or problematic.

Restrictive Layer (if observed):

Type: **n/a**

Depth (inches): **n/a**

Hydric Soil Present? **Yes** **X** **No** ___

Remarks: **The hydric soil criterion is met.**

HYDROLOGY

Wetland Hydrology Indicators:

Primary Indicators (minimum of one is required; check all that apply)

- ___ Surface Water (A1)
- ___ High Water Table (A2)
- **X** Saturation (A3)
- ___ Water Marks (B1)
- ___ Sediment Deposits (B2)
- ___ Drift Deposits (B3)
- ___ Algal Mat or Crust (B4)
- ___ Iron Deposits (B5)
- ___ Inundation Visible on Aerial Imagery (B7)
- ___ Sparsely Vegetated Concave Surface (B8)
- ___ Water-Stained Leaves (B9)
- ___ Aquatic Fauna (B13)
- ___ True Aquatic Plants (B14)
- ___ Hydrogen Sulfide Odor (C1)
- ___ Oxidized Rhizospheres on Living Roots (C3)
- ___ Presence of Reduced Iron (C4)
- ___ Recent Iron Reduction in Tilled Soils (C6)
- ___ Thin Muck Surface (C7)
- ___ Gauge or Well Data (D9)
- ___ Other (Explain in Remarks)

Secondary Indicators (minimum of two required)

- ___ Surface Soil Cracks (B6)
- ___ Drainage Patterns (B10)
- **X** Dry-Season Water Table (C2)
- ___ Crayfish Burrows (C8)
- ___ Saturation Visible on Aerial Imagery (C9)
- ___ Stunted or Stressed Plants (D1)
- **X** Geomorphic Position (D2)
- **X** FAC-Neutral Test (D5)

Field Observations:

Surface Water Present?	Yes ___	No **X**	Depth (inches):		
Water Table Present?	Yes **X**	No ___	Depth (inches):	**17**	
Saturation Present? (includes capillary fringe)	Yes **X**	No ___	Depth (inches):	**0**	

Wetland Hydrology Present? **Yes** **X** **No** ___

Describe Recorded Data (stream gauge, monitoring well, aerial photos, previous inspections), if available:

Local WETS table, NOAA's AHPS map, NRCS Soils Map, recent aerial photos

Remarks: **The water table is present at 17" with saturation at the surface. Multiple secondary, hydrology indicators are present as well. The criterion is met.**

WETLAND DETERMINATION DATA FORM - Midwest Region

Project/Site: **Creekside Crossing** City/County: **Pleasant Prairie / Kenosha** Sampling Date: **Oct 20th, 2014**

Applicant/Owner: **Bear Development, LLC** State: **WI** Sampling Point: **DP-6 (upl)**

Investigator(s): **Heather Patti, Nancy Wilson** Section, Township, Range: **SW 1/4 Sec 15, T1N R22E**

Landform (hillslope, terrace, etc.): **terrace** Local relief (concave, convex, none): **none**

Slope (%): **-** Lat: Long: Datum:

Soil Map Unit Name: **Ashkum silty clay loam (AtA), 0-2% slopes, hydric** WWI Classification: **none**

Are climatic / hydrologic conditions on the site typical for this time of year? Yes **X** No (if no, explain in Remarks)

Are Vegetation **N** Soil **N** or Hydrology **N** significantly disturbed? Are "Normal Circumstances" present? Yes **X** No

Are Vegetation **N** Soil **N** or Hydrology **N** naturally problematic? (if needed, explain any answers in Remarks)

SUMMARY OF FINDINGS --- Attach site map showing sampling point locations, transects, important features, etc.

Hydrophytic Vegetation Present?	Yes **X**	No	Is the Sampled Area		
Hydric Soil Present?	Yes	No **X**	within a Wetland?	Yes	No **X**
Wetland Hydrology Present?	Yes	No **X**	If yes, optional wetland site ID:		

Remarks: **This is an old field with *Phalaris arundinacea* growing upslope. The hydrophytic vegetation criterion is the only criterion met. The soils and lack of hydrology indicate that this is an upland.**

VEGETATION - Use scientific names for plants.

Sampling Point: **DP-6 (upl)**

Tree Stratum (Plot size: **30'R**)	Absolute % Cover	Dominant Species	Indicator Status
1. **-**			
2.			
3.			
4.			
5.			
6.			
7.			
	0%	= Total Cover	

Sapling/Shrub Stratum (Plot size: **15'R**)			
1. **-**			
2.			
3.			
4.			
5.			
6.			
7.			
	0%	= Total Cover	

Herb Stratum (Plot size: **5'R**)			
1. ***Poa pratensis***	**80%**	**Y**	**FAC**
2. ***Phalaris arundinacea***	**50%**	**Y**	**FACW**
3. ***Fragaria virginiana***	**20%**	**N**	**FACU**
4. ***Melilotus albus***	**10%**	**N**	**FACU**
5. ***Prunus vulgaris***	**10%**	**N**	**FAC**
6.			
7.			
8.			
9.			
10.			
11.			
12.			
13.			
14.			
	170%	= Total Cover	

Woody Vine Stratum (Plot size: **30'R)**)			
1. **-**			
2.			
3.			
4.			
	0%	= Total Cover	

Dominance Test Worksheet:

Number of Dominant Species That Are OBL, FACW, or FAC: **2** (A)

Total Number of Dominant Species Across All Strata: **2** (B)

Percent of Dominant Species That Are OBL, FACW, or FAC: **100%** (A/B)

Prevalence Index Worksheet:

Total % Cover of:		Multiply by:	
OBL species		x 1 =	
FACW species		x 2 =	
FAC species		x 3 =	
FACU species		x 4 =	
UPL species		x 5 =	
Column Totals:	(A)		(B)

Prevalence Index B/A =

Hydrophytic Vegetation Indicators:

- Rapid Test for Hydrophitic Vegetation
- **X** Dominance Test is >50%
- Prevalence Index is ≤ 3.0[1]
- Morphological Adaptations[1] (Provide supporting data in Remarks or on separate sheet)
- Problematic Hydrophytic Vegetation[1] (Explain)

[1] Indicators of hydric soil and wetland hydrology must be present, unless disturbed or problematic.

Hydrophytic Vegetation Present? Yes **X** No

Remarks: **This is an old field with some reed canary grass growing uplslope. The hydrophytic vegetation criterion is met, but the soils and hydrology indicate that this is an upland.**

SOIL Sampling Point: **DP-6 (upl)**

Profile Description: (Describe to the depth needed to document the indicator or confirm the absence of indicators.)

Depth (inches)	Matrix Color (moist)	%	Redox Features Color (moist)	%	Type[1]	Loc[2]	Texture	Remarks
0-12	**10YR 3/1**	**100**	**-**	**-**			**silty clay loam**	
12-20+	**10YR 4/2**	**90**	**10YR 5/6**	**10**	**C**	**M**	**silty clay**	

[1] Type: C=Concentration, D=Depletion, RM=Reduced Matrix, CS=Covered or Coated Sand Grains. [2] Location: PL=Pore Lining, M=Matrix

Hydric Soil Indicators:

- ___ Histosol (A1)
- ___ Histic Epipedon (A2)
- ___ Black Histic (A3)
- ___ Hydrogen Sulfide (A4)
- ___ Stratified Layers (A5)
- ___ 2 cm Much (A10)
- ___ Depleted Below Dark Surface (A11)
- ___ Thick Dark Surface (A12)
- ___ Sandy Mucky Mineral (S1)
- ___ Sandy Gleyed Matrix (S4)
- ___ Sandy Redox (S5)
- ___ Stripped Matrix (S6)
- ___ Loamy Mucky Mineral (F1)
- ___ Loamy Gleyed Matrix (F2)
- ___ Depleted Matrix (F3)
- ___ Redox Dark Surface (F6)
- ___ Depleted Dark Surface (F7)
- ___ Redox Depressions (F8)

Indicators for Problematic Hydric Soils[3]:

- ___ Coast Prairie Redox (A16) **(LRR,K,L,R)**
- ___ Dark Surface (S7) **(LRR,K,L)**
- ___ 5 cm mucky peat or peat (S3) **(LRR,K,L)**
- ___ Iron-Manganese Masses (F12) **(LRR,K,L,R)**
- ___ Very Shallow Dark Surface (TF12)
- ___ Other (Explain in Remarks)

[3] Indicators of hydrophytic evegetation and wetland hydrology must be present, unless disturbed or problematic.

Restrictive Layer (if observed):

Type: **n/a**

Depth (inches): **n/a**

Hydric Soil Present? **Yes** ___ **No** **X**

Remarks: **There is no redox in the upper 12". The hydric soil criterion is not met.**

HYDROLOGY

Wetland Hydrology Indicators:

Primary Indicators (minimum of one is required; check all that apply)

- ___ Surface Water (A1)
- ___ High Water Table (A2)
- ___ Saturation (A3)
- ___ Water Marks (B1)
- ___ Sediment Deposits (B2)
- ___ Drift Deposits (B3)
- ___ Algal Mat or Crust (B4)
- ___ Iron Deposits (B5)
- ___ Inundation Visible on Aerial Imagery (B7)
- ___ Sparsely Vegetated Concave Surface (B8)
- ___ Water-Stained Leaves (B9)
- ___ Aquatic Fauna (B13)
- ___ True Aquatic Plants (B14)
- ___ Hydrogen Sulfide Odor (C1)
- ___ Oxidized Rhizospheres on Living Roots (C3)
- ___ Presence of Reduced Iron (C4)
- ___ Recent Iron Reduction in Tilled Soils (C6)
- ___ Thin Muck Surface (C7)
- ___ Gauge or Well Data (D9)
- ___ Other (Explain in Remarks)

Secondary Indicators (minimum of two required)

- ___ Surface Soil Cracks (B6)
- ___ Drainage Patterns (B10)
- ___ Dry-Season Water Table (C2)
- ___ Crayfish Burrows (C8)
- ___ Saturation Visible on Aerial Imagery (C9)
- ___ Stunted or Stressed Plants (D1)
- ___ Geomorphic Position (D2)
- ___ FAC-Neutral Test (D5)

Field Observations:

Surface Water Present?	Yes ___	No **X**	Depth (inches): ___
Water Table Present?	Yes ___	No **X**	Depth (inches): ___
Saturation Present? (includes capillary fringe)	Yes ___	No **X**	Depth (inches): ___

Wetland Hydrology Present? **Yes** ___ **No** **X**

Describe Recorded Data (stream gauge, monitoring well, aerial photos, previous inspections), if available:

Local WETS table, NOAA's AHPS map, NRCS Soils Map, recent aerial photos

Remarks: **There is no hydrology in this area. The criterion is not met.**

WETLAND DETERMINATION DATA FORM - Midwest Region

Project/Site: **Creekside Crossing** City/County: **Pleasant Prairie / Kenosha** Sampling Date: **Oct 20th, 2014**

Applicant/Owner: **Bear Development, LLC** State: **WI** Sampling Point: **DP-7 (wtd)**

Investigator(s): **Heather Patti, Nancy Wilson** Section, Township, Range: **SW 1/4 Sec 15, T1N R22E**

Landform (hillslope, terrace, etc.): **wetland depression** Local relief (concave, convex, none): **concave**

Slope (%): **-** Lat: Long: Datum:

Soil Map Unit Name: **Ashkum silty clay loam (AtA), 0-2% slopes, hydric** WWI Classification: **none**

Are climatic / hydrologic conditions on the site typical for this time of year? Yes **X** No (if no, explain in Remarks)

Are Vegetation **N** Soil **N** or Hydrology **N** significantly disturbed? Are "Normal Circumstances" present? Yes **X** No

Are Vegetation **N** Soil **N** or Hydrology **Y*** naturally problematic? (if needed, explain any answers in Remarks)

SUMMARY OF FINDINGS --- Attach site map showing sampling point locations, transects, important features, etc.

Hydrophytic Vegetation Present?	Yes **X**	No	Is the Sampled Area		
Hydric Soil Present?	Yes **X**	No	within a Wetland?	Yes **X**	No
Wetland Hydrology Present?	Yes **X**	No	If yes, optional wetland site ID:	**W-4**	

Remarks: **This is a degraded fresh (wet) meadow. *This is a depressional area that recieves seasonal hydrology, thus making it naturally problematic. This wetland was likely created from grading activities. All three of the criteria are met.**

VEGETATION - Use scientific names for plants.

Sampling Point: **DP-7 (wtd)**

Tree Stratum (Plot size: **30'R**)	Absolute % Cover	Dominant Species	Indicator Status
1. **-**			
2.			
3.			
4.			
5.			
6.			
7.			
	0%	= Total Cover	

Sapling/Shrub Stratum (Plot size: **15'R**)			
1. ***Populus deltoides***	**5%**	**Y**	**FAC**
2. ***Salix amygdaloides***	**5%**	**Y**	**FACW**
3.			
4.			
5.			
6.			
7.			
	10%	= Total Cover	

Herb Stratum (Plot size: **5'R**)			
1. ***Phalaris arundinacea***	**60%**	**Y**	**FACW**
2. ***Euthamia graminifolia***	**10%**	**N**	**FACW**
3. ***Juncus tenuis***	**10%**	**N**	**FAC**
4. ***Trifolium repense***	**10%**	**N**	**FACU**
5. ***Lythrum salicaria***	**5%**	**N**	**OBL**
6.			
7.			
8.			
9.			
10.			
11.			
12.			
13.			
14.			
	95%	= Total Cover	

Woody Vine Stratum (Plot size: **30'R**)			
1. **-**			
2.			
3.			
4.			
	0%	= Total Cover	

Dominance Test Worksheet:

Number of Dominant Species That Are OBL, FACW, or FAC: **3** (A)

Total Number of Dominant Species Across All Strata: **3** (B)

Percent of Dominant Species That Are OBL, FACW, or FAC: **100%** (A/B)

Prevalence Index Worksheet:

Total % Cover of:		Multiply by:	
OBL species		x 1 =	
FACW species		x 2 =	
FAC species		x 3 =	
FACU species		x 4 =	
UPL species		x 5 =	
Column Totals:	(A)		(B)

Prevalence Index B/A =

Hydrophytic Vegetation Indicators:

- Rapid Test for Hydrophitic Vegetation
- **X** Dominance Test is >50%
- Prevalence Index is ≤ 3.0[1]
- Morphological Adaptations[1] (Provide supporting data in Remarks or on separate sheet)
- Problematic Hydrophytic Vegetation[1] (Explain)

[1] Indicators of hydric soil and wetland hydrology must be present, unless disturbed or problematic.

Hydrophytic Vegetation Present? Yes **X** No

Remarks: **This is a degraded fresh (wet) meadow. The hydrophytic vegetation criterion is met.**

SOIL Sampling Point: **DP-7 (wtd)**

Profile Description: (Describe to the depth needed to document the indicator or confirm the absence of indicators.)

Depth	Matrix		Redox Features					
(inches)	Color (moist)	%	Color (moist)	%	Type[1]	Loc[2]	Texture	Remarks
0-10	**10YR 4/1**	**40**	**10YR 5/8**	**10**	**C**	**M**	**silty clay**	***small gravel fill throughout profile**
	10YR 5/3	**50**	**-**	**-**				
10-18+	**10YR 5/4**	**60**	**10YR 5/8**	**40**	**C**	**M**	**silty clay**	

[1] Type: C=Concentration, D=Depletion, RM=Reduced Matrix, CS=Covered or Coated Sand Grains. [2] Location: PL=Pore Lining, M=Matrix

Hydric Soil Indicators:

- ___ Histosol (A1)
- ___ Histic Epipedon (A2)
- ___ Black Histic (A3)
- ___ Hydrogen Sulfide (A4)
- ___ Stratified Layers (A5)
- ___ 2 cm Much (A10)
- ___ Depleted Below Dark Surface (A11)
- ___ Thick Dark Surface (A12)
- ___ Sandy Mucky Mineral (S1)
- ___ Sandy Gleyed Matrix (S4)
- ___ Sandy Redox (S5)
- ___ Stripped Matrix (S6)
- ___ Loamy Mucky Mineral (F1)
- ___ Loamy Gleyed Matrix (F2)
- ___ Depleted Matrix (F3)
- ___ Redox Dark Surface (F6)
- ___ Depleted Dark Surface (F7)
- ___ Redox Depressions (F8)

Indicators for Problematic Hydric Soils[3]:

- ___ Coast Prairie Redox (A16) **(LRR,K,L,R)**
- ___ Dark Surface (S7) **(LRR,K,L)**
- ___ 5 cm mucky peat or peat (S3) **(LRR,K,L)**
- ___ Iron-Manganese Masses (F12) **(LRR,K,L,R)**
- ___ Very Shallow Dark Surface (TF12)
- ___ Other (Explain in Remarks)

[3] Indicators of hydrophytic evegetation and wetland hydrology must be present, unless disturbed or problematic.

Restrictive Layer (if observed):

Type: **n/a**

Depth (inches): **n/a**

Hydric Soil Present? **Yes** **X** **No** ___

Remarks: **Technically, no hydric soil indicators are present. However, it is in the best professional judgment of the delineator that hydric soils are present as redox concentrations are present at the surface.**

HYDROLOGY

Wetland Hydrology Indicators:

Primary Indicators (minimum of one is required; check all that apply)

- **X** Surface Water (A1)
- ___ High Water Table (A2)
- **X** Saturation (A3)
- ___ Water Marks (B1)
- ___ Sediment Deposits (B2)
- ___ Drift Deposits (B3)
- ___ Algal Mat or Crust (B4)
- ___ Iron Deposits (B5)
- ___ Inundation Visible on Aerial Imagery (B7)
- ___ Sparsely Vegetated Concave Surface (B8)
- ___ Water-Stained Leaves (B9)
- ___ Aquatic Fauna (B13)
- ___ True Aquatic Plants (B14)
- ___ Hydrogen Sulfide Odor (C1)
- ___ Oxidized Rhizospheres on Living Roots (C3)
- ___ Presence of Reduced Iron (C4)
- ___ Recent Iron Reduction in Tilled Soils (C6)
- ___ Thin Muck Surface (C7)
- ___ Gauge or Well Data (D9)
- ___ Other (Explain in Remarks)

Secondary Indicators (minimum of two required)

- ___ Surface Soil Cracks (B6)
- ___ Drainage Patterns (B10)
- ___ Dry-Season Water Table (C2)
- **X** Crayfish Burrows (C8)
- ___ Saturation Visible on Aerial Imagery (C9)
- ___ Stunted or Stressed Plants (D1)
- **X** Geomorphic Position (D2)
- **X** FAC-Neutral Test (D5)

Field Observations:

Surface Water Present?	Yes	**X**	No ___	Depth (inches):	**1**
Water Table Present?	Yes	___	No **X**	Depth (inches):	
Saturation Present? (includes capillary fringe)	Yes	**X**	No ___	Depth (inches):	**0**

Wetland Hydrology Present? **Yes** **X** **No** ___

Describe Recorded Data (stream gauge, monitoring well, aerial photos, previous inspections), if available:

Local WETS table, NOAA's AHPS map, NRCS Soils Map, recent aerial photos

Remarks: **There is 1" of surface water present that is perched on the clay layer.**

WETLAND DETERMINATION DATA FORM - Midwest Region

Project/Site: **Creekside Crossing** City/County: **Pleasant Prairie / Kenosha** Sampling Date: **Oct 20th, 2014**

Applicant/Owner: **Bear Development, LLC** State: **WI** Sampling Point: **DP-8 (upl)**

Investigator(s): **Heather Patti, Nancy Wilson** Section, Township, Range: **SW 1/4 Sec 15, T1N R22E**

Landform (hillslope, terrace, etc.): **slight backslope** Local relief (concave, convex, none): **slightly convex**

Slope (%): **2-3%** Lat: Long: Datum:

Soil Map Unit Name: **Beecher silt loam (BcA), 1-3% slopes , hydric via inclusions** WWI Classification: **none**

Are climatic / hydrologic conditions on the site typical for this time of year? Yes **X** No (if no, explain in Remarks)

Are Vegetation **N** Soil **N** or Hydrology **N** significantly disturbed? Are "Normal Circumstances" present? Yes **X** No

Are Vegetation **N** Soil **N** or Hydrology **N** naturally problematic? (if needed, explain any answers in Remarks)

SUMMARY OF FINDINGS --- Attach site map showing sampling point locations, transects, important features, etc.

Hydrophytic Vegetation Present?	Yes **X**	No	Is the Sampled Area		
Hydric Soil Present?	Yes	No **X**	within a Wetland?	Yes	No **X**
Wetland Hydrology Present?	Yes	No **X**	If yes, optional wetland site ID:		

Remarks: **This is an old field and shrubline edge. The hydrophytic vegetation criterion is met, but the soils and lack of hydrology indicate that this is an upland.**

VEGETATION - Use scientific names for plants.

Sampling Point: **DP-8 (upl)**

Tree Stratum (Plot size: **30'R**)	Absolute % Cover	Dominant Species	Indicator Status
1. **-**			
2.			
3.			
4.			
5.			
6.			
7.			
	0%	= Total Cover	

Sapling/Shrub Stratum (Plot size: **15'R**)			
1. ***Rhamnus cathartica***	**25%**	**Y**	**FAC**
2. ***Cornus alba***	**20%**	**Y**	**FACW**
3. ***Malus pumila***	**10%**	**N**	**UPL**
4. ***Rosa multiflora***	**5%**	**N**	**FACU**
5.			
6.			
7.			
	60%	= Total Cover	

Herb Stratum (Plot size: **5'R**)			
1. ***Poa pratensis***	**80%**	**Y**	**FAC**
2. ***Elymus repens***	**25%**	**Y**	**FACU**
3. ***Fragaria virginiana***	**10%**	**N**	**FACU**
4. ***Daucus carota***	**5%**	**N**	**UPL**
5.			
6.			
7.			
8.			
9.			
10.			
11.			
12.			
13.			
14.			
	120%	= Total Cover	

Woody Vine Stratum (Plot size: **30'R)**)			
1. **-**			
2.			
3.			
4.			
	0%	= Total Cover	

Dominance Test Worksheet:

Number of Dominant Species That Are OBL, FACW, or FAC: **3** (A)

Total Number of Dominant Species Across All Strata: **4** (B)

Percent of Dominant Species That Are OBL, FACW, or FAC: **75%** (A/B)

Prevalence Index Worksheet:

Total % Cover of:		Multiply by:	
OBL species		x 1 =	
FACW species		x 2 =	
FAC species		x 3 =	
FACU species		x 4 =	
UPL species		x 5 =	
Column Totals:	(A)		(B)

Prevalence Index B/A =

Hydrophytic Vegetation Indicators:

- Rapid Test for Hydrophitic Vegetation
- **X** Dominance Test is >50%
- Prevalence Index is ≤ 3.0[1]
- Morphological Adaptations[1] (Provide supporting data in Remarks or on separate sheet)
- Problematic Hydrophytic Vegetation[1] (Explain)

[1] Indicators of hydric soil and wetland hydrology must be present, unless disturbed or problematic.

Hydrophytic Vegetation Present? Yes **X** No

Remarks: **This is an old field and shrubline edge. The hydrophytic vegetation is met due to the presence of buckthorn and Kentucky blue grass, but the soils and lack of hydrology indicate that this is an upland area.**

SOIL Sampling Point: **DP-8 (upl)**

Profile Description: (Describe to the depth needed to document the indicator or confirm the absence of indicators.)

Depth (inches)	Matrix Color (moist)	%	Redox Features Color (moist)	%	Type[1]	Loc[2]	Texture	Remarks
0-14	**10YR 3/1**	**100**	**-**	**-**			**silty clay loam**	
14-20+	**10YR 5/3**	**90**	**10YR 5/6**	**10**	**C**	**M**	**silty clay**	

[1] Type: C=Concentration, D=Depletion, RM=Reduced Matrix, CS=Covered or Coated Sand Grains. [2] Location: PL=Pore Lining, M=Matrix

Hydric Soil Indicators:

- ___ Histosol (A1)
- ___ Histic Epipedon (A2)
- ___ Black Histic (A3)
- ___ Hydrogen Sulfide (A4)
- ___ Stratified Layers (A5)
- ___ 2 cm Much (A10)
- ___ Depleted Below Dark Surface (A11)
- ___ Thick Dark Surface (A12)
- ___ Sandy Mucky Mineral (S1)
- ___ Sandy Gleyed Matrix (S4)
- ___ Sandy Redox (S5)
- ___ Stripped Matrix (S6)
- ___ Loamy Mucky Mineral (F1)
- ___ Loamy Gleyed Matrix (F2)
- ___ Depleted Matrix (F3)
- ___ Redox Dark Surface (F6)
- ___ Depleted Dark Surface (F7)
- ___ Redox Depressions (F8)

Indicators for Problematic Hydric Soils[3]:

- ___ Coast Prairie Redox (A16) **(LRR,K,L,R)**
- ___ Dark Surface (S7) **(LRR,K,L)**
- ___ 5 cm mucky peat or peat (S3) **(LRR,K,L)**
- ___ Iron-Manganese Masses (F12) **(LRR,K,L,R)**
- ___ Very Shallow Dark Surface (TF12)
- ___ Other (Explain in Remarks)

[3] Indicators of hydrophytic evegetation and wetland hydrology must be present, unless disturbed or problematic.

Restrictive Layer (if observed):

Type: **n/a**

Depth (inches): **n/a**

Hydric Soil Present? **Yes** ___ **No** **X**

Remarks: **The hydric soil criterion is not met.**

HYDROLOGY

Wetland Hydrology Indicators:

Primary Indicators (minimum of one is required; check all that apply)

- ___ Surface Water (A1)
- ___ High Water Table (A2)
- ___ Saturation (A3)
- ___ Water Marks (B1)
- ___ Sediment Deposits (B2)
- ___ Drift Deposits (B3)
- ___ Algal Mat or Crust (B4)
- ___ Iron Deposits (B5)
- ___ Inundation Visible on Aerial Imagery (B7)
- ___ Sparsely Vegetated Concave Surface (B8)
- ___ Water-Stained Leaves (B9)
- ___ Aquatic Fauna (B13)
- ___ True Aquatic Plants (B14)
- ___ Hydrogen Sulfide Odor (C1)
- ___ Oxidized Rhizospheres on Living Roots (C3)
- ___ Presence of Reduced Iron (C4)
- ___ Recent Iron Reduction in Tilled Soils (C6)
- ___ Thin Muck Surface (C7)
- ___ Gauge or Well Data (D9)
- ___ Other (Explain in Remarks)

Secondary Indicators (minimum of two required)

- ___ Surface Soil Cracks (B6)
- ___ Drainage Patterns (B10)
- ___ Dry-Season Water Table (C2)
- ___ Crayfish Burrows (C8)
- ___ Saturation Visible on Aerial Imagery (C9)
- ___ Stunted or Stressed Plants (D1)
- ___ Geomorphic Position (D2)
- ___ FAC-Neutral Test (D5)

Field Observations:

Surface Water Present? Yes ___ No **X** Depth (inches): ___

Water Table Present? Yes ___ No **X** Depth (inches): ___

Saturation Present? (includes capillary fringe) Yes ___ No **X** Depth (inches): ___

Wetland Hydrology Present? **Yes** ___ **No** **X**

Describe Recorded Data (stream gauge, monitoring well, aerial photos, previous inspections), if available:

Local WETS table, NOAA's AHPS map, NRCS Soils Map, recent aerial photos

Remarks: **There is no hydrology in this area. The criterion is not met.**

WETLAND DETERMINATION DATA FORM - Midwest Region

Project/Site: **Creekside Crossing** City/County: **Pleasant Prairie / Kenosha** Sampling Date: **Oct 20th, 2014**

Applicant/Owner: **Bear Development, LLC** State: **WI** Sampling Point: **DP-9 (wtd)**

Investigator(s): **Heather Patti, Nancy Wilson** Section, Township, Range: **SW 1/4 Sec 15, T1N R22E**

Landform (hillslope, terrace, etc.): **slight wetland depresion** Local relief (concave, convex, none): **slightly concave**

Slope (%): **-** Lat: Long: Datum:

Soil Map Unit Name: **Beecher silt loam (BcA), 1-3% slopes , hydric via inclusions** WWI Classification: **none**

Are climatic / hydrologic conditions on the site typical for this time of year? Yes **X** No (if no, explain in Remarks)

Are Vegetation **Y*** Soil **N** or Hydrology **N** significantly disturbed? Are "Normal Circumstances" present? Yes No **X**

Are Vegetation **N** Soil **N** or Hydrology **Y**** naturally problematic? (if needed, explain any answers in Remarks)

SUMMARY OF FINDINGS --- Attach site map showing sampling point locations, transects, important features, etc.

Hydrophytic Vegetation Present?	Yes		No	**X**	Is the Sampled Area
Hydric Soil Present?	Yes	**X**	No		within a Wetland? Yes **X** No
Wetland Hydrology Present?	Yes	**X**	No		If yes, optional wetland site ID: **W-5**

Remarks: ***This is a farmed wetland in an active cornfield. **This is a depressional area that recieves seasonal hydrology, thus making it naturally problematic.**

VEGETATION - Use scientific names for plants.

Sampling Point: **DP-9 (wtd)**

Tree Stratum (Plot size: **30'R**)	Absolute % Cover	Dominant Species	Indicator Status
1. **-**			
2.			
3.			
4.			
5.			
6.			
7.			
	0% = Total Cover		

Sapling/Shrub Stratum (Plot size: **15'R**)			
1. **-**			
2.			
3.			
4.			
5.			
6.			
7.			
	0% = Total Cover		

Herb Stratum (Plot size: **5'R**)			
1. ***Taraxacum officinale***	**10%**	**Y**	**FACU**
2. ***Daucus carota***	**5%**	**Y**	**UPL**
3.			
4.			
5.			
6.			
7.			
8.			
9.			
10.			
11.			
12.			
13.			
14.			
	15% = Total Cover		

Woody Vine Stratum (Plot size: **30'R**)			
1. **-**			
2.			
3.			
4.			
	0% = Total Cover		

Dominance Test Worksheet:

Number of Dominant Species That Are OBL, FACW, or FAC: **0** (A)

Total Number of Dominant Species Across All Strata: **2** (B)

Percent of Dominant Species That Are OBL, FACW, or FAC: **0%** (A/B)

Prevalence Index Worksheet:

Total % Cover of:		Multiply by:	
OBL species		x 1 =	
FACW species		x 2 =	
FAC species		x 3 =	
FACU species		x 4 =	
UPL species		x 5 =	
Column Totals:	(A)		(B)

Prevalence Index B/A =

Hydrophytic Vegetation Indicators:

- Rapid Test for Hydrophitic Vegetation
- Dominance Test is >50%
- Prevalence Index is ≤ 3.0[1]
- Morphological Adaptations[1] (Provide supporting data in Remarks or on separate sheet)
- Problematic Hydrophytic Vegetation[1] (Explain)

[1] Indicators of hydric soil and wetland hydrology must be present, unless disturbed or problematic.

Hydrophytic Vegetation Present? Yes No **X**

Remarks: **This area is sparsely vegetated due to seasonal saturation. The hydrophytic vegetation criterion is not met, but the soils and hydrology indicate that this is a wetland.**

SOIL Sampling Point: **DP-9 (wtd)**

Profile Description: (Describe to the depth needed to document the indicator or confirm the absence of indicators.)

Depth	Matrix		Redox Features					
(inches)	Color (moist)	%	Color (moist)	%	Type[1]	Loc[2]	Texture	Remarks
0-8	10YR 3/1	100	-	-			silty clay loam	
8-12	10YR 3/1	95	10YR 5/6	5	C	M	silty clay loam	
12-20+	10YR 5/3	90	10YR 5/6	10	C	M	silty clay	

[1] Type: C=Concentration, D=Depletion, RM=Reduced Matrix, CS=Covered or Coated Sand Grains. [2] Location: PL=Pore Lining, M=Matrix

Hydric Soil Indicators:

- ___ Histosol (A1)
- ___ Histic Epipedon (A2)
- ___ Black Histic (A3)
- ___ Hydrogen Sulfide (A4)
- ___ Stratified Layers (A5)
- ___ 2 cm Much (A10)
- ___ Depleted Below Dark Surface (A11)
- ___ Thick Dark Surface (A12)
- ___ Sandy Mucky Mineral (S1)
- ___ Sandy Gleyed Matrix (S4)
- ___ Sandy Redox (S5)
- ___ Stripped Matrix (S6)
- ___ Loamy Mucky Mineral (F1)
- ___ Loamy Gleyed Matrix (F2)
- ___ Depleted Matrix (F3)
- X Redox Dark Surface (F6)
- ___ Depleted Dark Surface (F7)
- ___ Redox Depressions (F8)

Indicators for Problematic Hydric Soils[3]:

- ___ Coast Prairie Redox (A16) **(LRR,K,L,R)**
- ___ Dark Surface (S7) **(LRR,K,L)**
- ___ 5 cm mucky peat or peat (S3) **(LRR,K,L)**
- ___ Iron-Manganese Masses (F12) **(LRR,K,L,R)**
- ___ Very Shallow Dark Surface (TF12)
- ___ Other (Explain in Remarks)

[3] Indicators of hydrophytic evegetation and wetland hydrology must be present, unless disturbed or problematic.

Restrictive Layer (if observed):

Type: **n/a**

Depth (inches): **n/a**

Hydric Soil Present? **Yes** X **No** ___

Remarks: **The hydric soil criterion is met.**

HYDROLOGY

Wetland Hydrology Indicators:

Primary Indicators (minimum of one is required; check all that apply)

- ___ Surface Water (A1)
- X High Water Table (A2)
- X Saturation (A3)
- ___ Water Marks (B1)
- ___ Sediment Deposits (B2)
- ___ Drift Deposits (B3)
- ___ Algal Mat or Crust (B4)
- ___ Iron Deposits (B5)
- ___ Inundation Visible on Aerial Imagery (B7)
- ___ Sparsely Vegetated Concave Surface (B8)
- ___ Water-Stained Leaves (B9)
- ___ Aquatic Fauna (B13)
- ___ True Aquatic Plants (B14)
- ___ Hydrogen Sulfide Odor (C1)
- ___ Oxidized Rhizospheres on Living Roots (C3)
- ___ Presence of Reduced Iron (C4)
- ___ Recent Iron Reduction in Tilled Soils (C6)
- ___ Thin Muck Surface (C7)
- ___ Gauge or Well Data (D9)
- ___ Other (Explain in Remarks)

Secondary Indicators (minimum of two required)

- ___ Surface Soil Cracks (B6)
- ___ Drainage Patterns (B10)
- ___ Dry-Season Water Table (C2)
- ___ Crayfish Burrows (C8)
- X Saturation Visible on Aerial Imagery (C9)
- X Stunted or Stressed Plants (D1)
- X Geomorphic Position (D2)
- ___ FAC-Neutral Test (D5)

Field Observations:

Surface Water Present?	Yes ___	No X	Depth (inches):	
Water Table Present?	Yes X	No ___	Depth (inches):	12
Saturation Present? (includes capillary fringe)	Yes X	No ___	Depth (inches):	10

Wetland Hydrology Present? **Yes** X **No** ___

Describe Recorded Data (stream gauge, monitoring well, aerial photos, previous inspections), if available:

Local WETS table, NOAA's AHPS map, NRCS Soils Map, recent aerial photos

Remarks: **The water table is present at 12" with saturation at 10". Multiple secondary hydrology indicators are present as well. The criterion is met.**

WETLAND DETERMINATION DATA FORM - Midwest Region

Project/Site: **Creekside Crossing** City/County: **Pleasant Prairie / Kenosha** Sampling Date: **Oct 20th, 2014**

Applicant/Owner: **Bear Development, LLC** State: **WI** Sampling Point: **DP-10 (upl)**

Investigator(s): **Heather Patti, Nancy Wilson** Section, Township, Range: **SW 1/4 Sec 15, T1N R22E**

Landform (hillslope, terrace, etc.): **terrace** Local relief (concave, convex, none): **none**

Slope (%): **-** Lat: Long: Datum:

Soil Map Unit Name: **Ashkum silty clay loam (AtA), 0-2% slopes, hydric** WWI Classification: **none**

Are climatic / hydrologic conditions on the site typical for this time of year? Yes **X** No (if no, explain in Remarks)

Are Vegetation **N** Soil **N** or Hydrology **N** significantly disturbed? Are "Normal Circumstances" present? Yes **X** No

Are Vegetation **N** Soil **N** or Hydrology **N** naturally problematic? (if needed, explain any answers in Remarks)

SUMMARY OF FINDINGS --- Attach site map showing sampling point locations, transects, important features, etc.

Hydrophytic Vegetation Present?	Yes **X**	No	Is the Sampled Area		
Hydric Soil Present?	Yes	No **X**	within a Wetland?	Yes	No **X**
Wetland Hydrology Present?	Yes	No **X**	If yes, optional wetland site ID:		

Remarks: **This is a shrub thicket and old field. The hydrophytic vegetation criterion is met, but the soils and lack of hydrology indicate that this is an upland area.**

VEGETATION - Use scientific names for plants.

Sampling Point: **DP-10 (upl)**

Tree Stratum (Plot size: **30'R**)	Absolute % Cover	Dominant Species	Indicator Status
1. ***Prunus serotina***	**5%**	**Y**	**FACU**
2.			
3.			
4.			
5.			
6.			
7.			
	5%	= Total Cover	

Sapling/Shrub Stratum (Plot size: **15'R**)			
1. ***Rhamnus cathartica***	**30%**	**Y**	**FAC**
2. ***Cornus racemosa***	**20%**	**Y**	**FAC**
3.			
4.			
5.			
6.			
7.			
	50%	= Total Cover	

Herb Stratum (Plot size: **5'R**)			
1. ***Poa pratensis***	**80%**	**Y**	**FAC**
2. ***Melilotus albus***	**40%**	**Y**	**FACU**
3. ***Solidago canadensis***	**20%**	**N**	**FACU**
4. ***Dactylis glomerata***	**10%**	**N**	**FACU**
5. ***Daucus carota***	**10%**	**N**	**UPL**
6.			
7.			
8.			
9.			
10.			
11.			
12.			
13.			
14.			
	160%	= Total Cover	

Woody Vine Stratum (Plot size: **30'R)**)			
1. **-**			
2.			
3.			
4.			
	0%	= Total Cover	

Dominance Test Worksheet:

Number of Dominant Species That Are OBL, FACW, or FAC: **3** (A)

Total Number of Dominant Species Across All Strata: **5** (B)

Percent of Dominant Species That Are OBL, FACW, or FAC: **60%** (A/B)

Prevalence Index Worksheet:

Total % Cover of:		Multiply by:	
OBL species		x 1 =	
FACW species		x 2 =	
FAC species		x 3 =	
FACU species		x 4 =	
UPL species		x 5 =	
Column Totals:	(A)		(B)

Prevalence Index B/A =

Hydrophytic Vegetation Indicators:

- Rapid Test for Hydrophitic Vegetation
- **X** Dominance Test is >50%
- Prevalence Index is ≤ 3.0[1]
- Morphological Adaptations[1] (Provide supporting data in Remarks or on separate sheet)
- Problematic Hydrophytic Vegetation[1] (Explain)

[1] Indicators of hydric soil and wetland hydrology must be present, unless disturbed or problematic.

Hydrophytic Vegetation Present? Yes **X** No

Remarks: **This is a shrub thicket and old field. The hydrophytic vegetation criterion is met due to the presence of buckthorn and Kentucky blue grass, but the soils and lack of hydrology indicate that this is an upland.**

SOIL Sampling Point: **DP-10 (upl)**

Profile Description: (Describe to the depth needed to document the indicator or confirm the absence of indicators.)

Depth (inches)	Matrix Color (moist)	%	Redox Features Color (moist)	%	Type[1]	Loc[2]	Texture	Remarks
0-12	**10YR 3/1**	**100**	**-**	**-**			**silty clay loam**	***some mixing of the lower layer is evider**
12-20+	**10YR 5/3**	**90**	**10YR 5/6**	**10**	**C**	**M**	**silty clay loam**	**evident**

[1] Type: C=Concentration, D=Depletion, RM=Reduced Matrix, CS=Covered or Coated Sand Grains. [2] Location: PL=Pore Lining, M=Matrix

Hydric Soil Indicators:

- ___ Histosol (A1)
- ___ Histic Epipedon (A2)
- ___ Black Histic (A3)
- ___ Hydrogen Sulfide (A4)
- ___ Stratified Layers (A5)
- ___ 2 cm Much (A10)
- ___ Depleted Below Dark Surface (A11)
- ___ Thick Dark Surface (A12)
- ___ Sandy Mucky Mineral (S1)
- ___ Sandy Gleyed Matrix (S4)
- ___ Sandy Redox (S5)
- ___ Stripped Matrix (S6)
- ___ Loamy Mucky Mineral (F1)
- ___ Loamy Gleyed Matrix (F2)
- ___ Depleted Matrix (F3)
- ___ Redox Dark Surface (F6)
- ___ Depleted Dark Surface (F7)
- ___ Redox Depressions (F8)

Indicators for Problematic Hydric Soils[3]:

- ___ Coast Prairie Redox (A16) **(LRR,K,L,R)**
- ___ Dark Surface (S7) **(LRR,K,L)**
- ___ 5 cm mucky peat or peat (S3) **(LRR,K,L)**
- ___ Iron-Manganese Masses (F12) **(LRR,K,L,R)**
- ___ Very Shallow Dark Surface (TF12)
- ___ Other (Explain in Remarks)

[3] Indicators of hydrophytic evegetation and wetland hydrology must be present, unless disturbed or problematic.

Restrictive Layer (if observed):

Type: **n/a**

Depth (inches): **n/a**

Hydric Soil Present? **Yes** ___ **No** **X**

Remarks: **The hydric soil criterion is not met.**

HYDROLOGY

Wetland Hydrology Indicators:

Primary Indicators (minimum of one is required; check all that apply)

- ___ Surface Water (A1)
- ___ High Water Table (A2)
- ___ Saturation (A3)
- ___ Water Marks (B1)
- ___ Sediment Deposits (B2)
- ___ Drift Deposits (B3)
- ___ Algal Mat or Crust (B4)
- ___ Iron Deposits (B5)
- ___ Inundation Visible on Aerial Imagery (B7)
- ___ Sparsely Vegetated Concave Surface (B8)
- ___ Water-Stained Leaves (B9)
- ___ Aquatic Fauna (B13)
- ___ True Aquatic Plants (B14)
- ___ Hydrogen Sulfide Odor (C1)
- ___ Oxidized Rhizospheres on Living Roots (C3)
- ___ Presence of Reduced Iron (C4)
- ___ Recent Iron Reduction in Tilled Soils (C6)
- ___ Thin Muck Surface (C7)
- ___ Gauge or Well Data (D9)
- ___ Other (Explain in Remarks)

Secondary Indicators (minimum of two required)

- ___ Surface Soil Cracks (B6)
- ___ Drainage Patterns (B10)
- ___ Dry-Season Water Table (C2)
- ___ Crayfish Burrows (C8)
- ___ Saturation Visible on Aerial Imagery (C9)
- ___ Stunted or Stressed Plants (D1)
- ___ Geomorphic Position (D2)
- ___ FAC-Neutral Test (D5)

Field Observations:

Surface Water Present? Yes ___ No **X** Depth (inches): ___

Water Table Present? Yes ___ No **X** Depth (inches): ___

Saturation Present? (includes capillary fringe) Yes ___ No **X** Depth (inches): ___

Wetland Hydrology Present? **Yes** ___ **No** **X**

Describe Recorded Data (stream gauge, monitoring well, aerial photos, previous inspections), if available:

Local WETS table, NOAA's AHPS map, NRCS Soils Map, recent aerial photos

Remarks: **There is no hydrology in this area. The criterion is not met.**

WETLAND DETERMINATION DATA FORM - Midwest Region

Project/Site: **Creekside Crossing** City/County: **Pleasant Prairie / Kenosha** Sampling Date: **Oct 20th, 2014**

Applicant/Owner: **Bear Development, LLC** State: **WI** Sampling Point: **DP-11 (upl)**

Investigator(s): **Heather Patti, Nancy Wilson** Section, Township, Range: **SW 1/4 Sec 15, T1N R22E**

Landform (hillslope, terrace, etc.): **slight backslope** Local relief (concave, convex, none): **slightly convex**

Slope (%): **5%** Lat: Long: Datum:

Soil Map Unit Name: **Aztalan loam (AzA), 0-2% slopes, hydric via inclusions** WWI Classification: **none**

Are climatic / hydrologic conditions on the site typical for this time of year? Yes **X** No (if no, explain in Remarks)

Are Vegetation **N** Soil **N** or Hydrology **N** significantly disturbed? Are "Normal Circumstances" present? Yes **X** No

Are Vegetation **N** Soil **N** or Hydrology **N** naturally problematic? (if needed, explain any answers in Remarks)

SUMMARY OF FINDINGS --- Attach site map showing sampling point locations, transects, important features, etc.

Hydrophytic Vegetation Present?	Yes		No	**X**	Is the Sampled Area
Hydric Soil Present?	Yes	**X**	No		within a Wetland? Yes No **X**
Wetland Hydrology Present?	Yes		No	**X**	If yes, optional wetland site ID:

Remarks: **This is an old field with small pockets of reed canary grass. Hydric soils are present, but the vegetation and a lack of hydrology indicate that this is an upland area.**

VEGETATION - Use scientific names for plants.

Sampling Point: **DP-11 (upl)**

Tree Stratum (Plot size: **30'R**)	Absolute % Cover	Dominant Species	Indicator Status
1. **-**			
2.			
3.			
4.			
5.			
6.			
7.			
	0%	= Total Cover	

Sapling/Shrub Stratum (Plot size: **15'R**)			
1. ***Rubus idaeus***	**20%**	**Y**	**FACU**
2. ***Rosa multiflora***	**5%**	**N**	**FACU**
3.			
4.			
5.			
6.			
7.			
	25%	= Total Cover	

Herb Stratum (Plot size: **5'R**)			
1. ***Poa pratensis***	**90%**	**Y**	**FAC**
2. ***Solidago canadensis***	**15%**	**N**	**FACU**
3. ***Phalaris arundinacea***	**5%**	**N**	**FACW**
4.			
5.			
6.			
7.			
8.			
9.			
10.			
11.			
12.			
13.			
14.			
	110%	= Total Cover	

Woody Vine Stratum (Plot size: **30'R**)			
1. **-**			
2.			
3.			
4.			
	0%	= Total Cover	

Dominance Test Worksheet:

Number of Dominant Species That Are OBL, FACW, or FAC: **1** (A)

Total Number of Dominant Species Across All Strata: **2** (B)

Percent of Dominant Species That Are OBL, FACW, or FAC: **50%** (A/B)

Prevalence Index Worksheet:

Total % Cover of:			Multiply by:	
OBL species	**0**	x 1 =	**0**	
FACW species	**5**	x 2 =	**10**	
FAC species	**90**	x 3 =	**270**	
FACU species	**40**	x 4 =	**160**	
UPL species	**0**	x 5 =	**0**	
Column Totals:	**135**	(A)	**440**	(B)

Prevalence Index B/A = **3.3**

Hydrophytic Vegetation Indicators:

- Rapid Test for Hydrophitic Vegetation
- Dominance Test is >50%
- Prevalence Index is ≤ 3.0[1]
- Morphological Adaptations[1] (Provide supporting data in Remarks or on separate sheet)
- Problematic Hydrophytic Vegetation[1] (Explain)

[1] Indicators of hydric soil and wetland hydrology must be present, unless disturbed or problematic.

Hydrophytic Vegetation Present? Yes No **X**

Remarks: **This is an old field with small pockets of reed canary grass. The hydrophytic vegetation criterion is not met.**

SOIL Sampling Point: **DP-11 (upl)**

Profile Description: (Describe to the depth needed to document the indicator or confirm the absence of indicators.)

Depth (inches)	Matrix Color (moist)	%	Redox Features Color (moist)	%	Type[1]	Loc[2]	Texture	Remarks
0-15	**10YR 3/1**	**-**	**-**				**silty clay loam**	
15-20+	**10YR 5/2**	**90**	**10YR 5/6**	**10**	**C**	**M**	**silty clay loam**	

[1] Type: C=Concentration, D=Depletion, RM=Reduced Matrix, CS=Covered or Coated Sand Grains. [2] Location: PL=Pore Lining, M=Matrix

Hydric Soil Indicators:

- ___ Histosol (A1)
- ___ Histic Epipedon (A2)
- ___ Black Histic (A3)
- ___ Hydrogen Sulfide (A4)
- ___ Stratified Layers (A5)
- ___ 2 cm Much (A10)
- **X** Depleted Below Dark Surface (A11)
- ___ Thick Dark Surface (A12)
- ___ Sandy Mucky Mineral (S1)
- ___ Sandy Gleyed Matrix (S4)
- ___ Sandy Redox (S5)
- ___ Stripped Matrix (S6)
- ___ Loamy Mucky Mineral (F1)
- ___ Loamy Gleyed Matrix (F2)
- ___ Depleted Matrix (F3)
- ___ Redox Dark Surface (F6)
- ___ Depleted Dark Surface (F7)
- ___ Redox Depressions (F8)

Indicators for Problematic Hydric Soils[3]:

- ___ Coast Prairie Redox (A16) **(LRR,K,L,R)**
- ___ Dark Surface (S7) **(LRR,K,L)**
- ___ 5 cm mucky peat or peat (S3) **(LRR,K,L)**
- ___ Iron-Manganese Masses (F12) **(LRR,K,L,R)**
- ___ Very Shallow Dark Surface (TF12)
- ___ Other (Explain in Remarks)

[3] Indicators of hydrophytic evegetation and wetland hydrology must be present, unless disturbed or problematic.

Restrictive Layer (if observed):

Type: **n/a**

Depth (inches): **n/a**

Hydric Soil Present? **Yes** **X** **No** ___

Remarks: **The soils have a dark profile and are similar to those at wetland data point (DP-12.)**

HYDROLOGY

Wetland Hydrology Indicators:

Primary Indicators (minimum of one is required; check all that apply)

- ___ Surface Water (A1)
- ___ High Water Table (A2)
- ___ Saturation (A3)
- ___ Water Marks (B1)
- ___ Sediment Deposits (B2)
- ___ Drift Deposits (B3)
- ___ Algal Mat or Crust (B4)
- ___ Iron Deposits (B5)
- ___ Inundation Visible on Aerial Imagery (B7)
- ___ Sparsely Vegetated Concave Surface (B8)
- ___ Water-Stained Leaves (B9)
- ___ Aquatic Fauna (B13)
- ___ True Aquatic Plants (B14)
- ___ Hydrogen Sulfide Odor (C1)
- ___ Oxidized Rhizospheres on Living Roots (C3)
- ___ Presence of Reduced Iron (C4)
- ___ Recent Iron Reduction in Tilled Soils (C6)
- ___ Thin Muck Surface (C7)
- ___ Gauge or Well Data (D9)
- ___ Other (Explain in Remarks)

Secondary Indicators (minimum of two required)

- ___ Surface Soil Cracks (B6)
- ___ Drainage Patterns (B10)
- ___ Dry-Season Water Table (C2)
- ___ Crayfish Burrows (C8)
- ___ Saturation Visible on Aerial Imagery (C9)
- ___ Stunted or Stressed Plants (D1)
- ___ Geomorphic Position (D2)
- ___ FAC-Neutral Test (D5)

Field Observations:

Surface Water Present?	Yes ___	No **X**	Depth (inches): ___
Water Table Present?	Yes ___	No **X**	Depth (inches): ___
Saturation Present? (includes capillary fringe)	Yes ___	No **X**	Depth (inches): ___

Wetland Hydrology Present? **Yes** ___ **No** **X**

Describe Recorded Data (stream gauge, monitoring well, aerial photos, previous inspections), if available:

Local WETS table, NOAA's AHPS map, NRCS Soils Map, recent aerial photo

Remarks: **There is no hydrology in this area. The criterion is not met.**

WETLAND DETERMINATION DATA FORM - Midwest Region

Project/Site: **Creekside Crossing** City/County: **Pleasant Prairie / Kenosha** Sampling Date: **Oct 20th, 2014**

Applicant/Owner: **Bear Development, LLC** State: **WI** Sampling Point: **DP-12 (wtd)**

Investigator(s): **Heather Patti, Nancy Wilson** Section, Township, Range: **SW 1/4 Sec 15, T1N R22E**

Landform (hillslope, terrace, etc.): **wetland depression** Local relief (concave, convex, none): **concave**

Slope (%): **-** Lat: Long: Datum:

Soil Map Unit Name: **Aztalan loam (AzA), 0-2% slopes, hydric via inclusions** WWI Classification: **none**

Are climatic / hydrologic conditions on the site typical for this time of year? Yes **X** No (if no, explain in Remarks)

Are Vegetation **N** Soil **N** or Hydrology **N** significantly disturbed? Are "Normal Circumstances" present? Yes **X** No

Are Vegetation **N** Soil **N** or Hydrology **Y*** naturally problematic? (if needed, explain any answers in Remarks)

SUMMARY OF FINDINGS --- Attach site map showing sampling point locations, transects, important features, etc.

Hydrophytic Vegetation Present?	Yes **X**	No	Is the Sampled Area		
Hydric Soil Present?	Yes **X**	No	within a Wetland?	Yes **X**	No
Wetland Hydrology Present?	Yes **X**	No	If yes, optional wetland site ID:	**W-7**	

Remarks: **This is a fresh (wet) meadow. *This is a depressional area that recieves seasonal hydrology, thus making it naturally problematic. All three of the criteria are met.**

VEGETATION - Use scientific names for plants.

Sampling Point: **DP-12 (wtd)**

Tree Stratum (Plot size: **30'R**)	Absolute % Cover	Dominant Species	Indicator Status
1. ***Salix nigra***	**10%**	**Y**	**OBL**
2.			
3.			
4.			
5.			
6.			
7.			
	10% = Total Cover		

Sapling/Shrub Stratum (Plot size: **15'R**)			
1. ***Salix discolor***	**20%**	**Y**	**FAC**
2.			
3.			
4.			
5.			
6.			
7.			
	20% = Total Cover		

Herb Stratum (Plot size: **5'R**)			
1. ***Phalaris arundinacea***	**100%**	**Y**	**FACW**
2. ***Apocynum cannabinum***	**10%**	**N**	**FAC**
3. ***Asclepias syriaca***	**5%**	**N**	**FACU**
4.			
5.			
6.			
7.			
8.			
9.			
10.			
11.			
12.			
13.			
14.			
	115% = Total Cover		

Woody Vine Stratum (Plot size: **30'R**)			
1. **-**			
2.			
3.			
4.			
	0% = Total Cover		

Dominance Test Worksheet:

Number of Dominant Species That Are OBL, FACW, or FAC: **3** (A)

Total Number of Dominant Species Across All Strata: **3** (B)

Percent of Dominant Species That Are OBL, FACW, or FAC: **100%** (A/B)

Prevalence Index Worksheet:

Total % Cover of:		Multiply by:	
OBL species		x 1 =	
FACW species		x 2 =	
FAC species		x 3 =	
FACU species		x 4 =	
UPL species		x 5 =	
Column Totals:	(A)		(B)

Prevalence Index B/A =

Hydrophytic Vegetation Indicators:

- Rapid Test for Hydrophitic Vegetation
- **X** Dominance Test is >50%
- Prevalence Index is ≤ 3.0[1]
- Morphological Adaptations[1] (Provide supporting data in Remarks or on separate sheet)
- Problematic Hydrophytic Vegetation[1] (Explain)

[1] Indicators of hydric soil and wetland hydrology must be present, unless disturbed or problematic.

Hydrophytic Vegetation Present? Yes **X** No

Remarks: **This is a fresh (wet) meadow. The hydrophytic vegetation criterion is met.**

SOIL Sampling Point: **DP-12 (wtd)**

Profile Description: (Describe to the depth needed to document the indicator or confirm the absence of indicators.)

Depth (inches)	Matrix Color (moist)	%	Redox Features Color (moist)	%	Type[1]	Loc[2]	Texture	Remarks
0-12	10YR 2/1	100	-	-			silty clay loam	
12-20+	10YR 5/2	80	10YR 5/6	20%	C	M	silty clay loam	

[1] Type: C=Concentration, D=Depletion, RM=Reduced Matrix, CS=Covered or Coated Sand Grains. [2] Location: PL=Pore Lining, M=Matrix

Hydric Soil Indicators:

- ___ Histosol (A1)
- ___ Histic Epipedon (A2)
- ___ Black Histic (A3)
- ___ Hydrogen Sulfide (A4)
- ___ Stratified Layers (A5)
- ___ 2 cm Much (A10)
- X Depleted Below Dark Surface (A11)
- ___ Thick Dark Surface (A12)
- ___ Sandy Mucky Mineral (S1)
- ___ Sandy Gleyed Matrix (S4)
- ___ Sandy Redox (S5)
- ___ Stripped Matrix (S6)
- ___ Loamy Mucky Mineral (F1)
- ___ Loamy Gleyed Matrix (F2)
- ___ Depleted Matrix (F3)
- ___ Redox Dark Surface (F6)
- ___ Depleted Dark Surface (F7)
- ___ Redox Depressions (F8)

Indicators for Problematic Hydric Soils[3]:

- ___ Coast Prairie Redox (A16) **(LRR,K,L,R)**
- ___ Dark Surface (S7) **(LRR,K,L)**
- ___ 5 cm mucky peat or peat (S3) **(LRR,K,L)**
- ___ Iron-Manganese Masses (F12) **(LRR,K,L,R)**
- ___ Very Shallow Dark Surface (TF12)
- ___ Other (Explain in Remarks)

[3] Indicators of hydrophytic evegetation and wetland hydrology must be present, unless disturbed or problematic.

Restrictive Layer (if observed):

Type: **n/a**

Depth (inches): **n/a**

Hydric Soil Present? **Yes** X **No** ___

Remarks: **The hydric soil criterion is met.**

HYDROLOGY

Wetland Hydrology Indicators:

Primary Indicators (minimum of one is required; check all that apply)

- ___ Surface Water (A1)
- X High Water Table (A2)
- X Saturation (A3)
- ___ Water Marks (B1)
- ___ Sediment Deposits (B2)
- ___ Drift Deposits (B3)
- ___ Algal Mat or Crust (B4)
- ___ Iron Deposits (B5)
- ___ Inundation Visible on Aerial Imagery (B7)
- ___ Sparsely Vegetated Concave Surface (B8)
- ___ Water-Stained Leaves (B9)
- ___ Aquatic Fauna (B13)
- ___ True Aquatic Plants (B14)
- ___ Hydrogen Sulfide Odor (C1)
- ___ Oxidized Rhizospheres on Living Roots (C3)
- ___ Presence of Reduced Iron (C4)
- ___ Recent Iron Reduction in Tilled Soils (C6)
- ___ Thin Muck Surface (C7)
- ___ Gauge or Well Data (D9)
- ___ Other (Explain in Remarks)

Secondary Indicators (minimum of two required)

- ___ Surface Soil Cracks (B6)
- ___ Drainage Patterns (B10)
- ___ Dry-Season Water Table (C2)
- ___ Crayfish Burrows (C8)
- ___ Saturation Visible on Aerial Imagery (C9)
- ___ Stunted or Stressed Plants (D1)
- X Geomorphic Position (D2)
- X FAC-Neutral Test (D5)

Field Observations:

Surface Water Present?	Yes	___	No	X	Depth (inches): ___
Water Table Present?	Yes	X	No	___	Depth (inches): 12
Saturation Present? (includes capillary fringe)	Yes	X	No	___	Depth (inches): 10

Wetland Hydrology Present? **Yes** X **No** ___

Describe Recorded Data (stream gauge, monitoring well, aerial photos, previous inspections), if available:

Local WETS table, NOAA's AHPS map, NRCS Soils Map, recent aerial photo

Remarks: **The water table is present at 12" with saturation at 10". Multiple secondary hydrology indicators are present as well. The criterion is met.**

WETLAND DETERMINATION DATA FORM - Midwest Region

Project/Site: **Creekside Crossing** City/County: **Pleasant Prairie / Kenosha** Sampling Date: **Oct 20th, 2014**

Applicant/Owner: **Bear Development, LLC** State: **WI** Sampling Point: **DP-13 (upl)**

Investigator(s): **Heather Patti, Nancy Wilson** Section, Township, Range: **SW 1/4 Sec 15, T1N R22E**

Landform (hillslope, terrace, etc.): **hillslope** Local relief (concave, convex, none): **convex**

Slope (%): **10** Lat: Long: Datum:

Soil Map Unit Name: **Morley silt loam (MzdB), 2-6% slopes, non-hydric** WWI Classification: **none**

Are climatic / hydrologic conditions on the site typical for this time of year? Yes **X** No (if no, explain in Remarks)

Are Vegetation **N** Soil **N** or Hydrology **N** significantly disturbed? Are "Normal Circumstances" present? Yes **X** No

Are Vegetation **N** Soil **N** or Hydrology **N** naturally problematic? (if needed, explain any answers in Remarks)

SUMMARY OF FINDINGS --- Attach site map showing sampling point locations, transects, important features, etc.

Hydrophytic Vegetation Present?	Yes **X**	No	Is the Sampled Area		
Hydric Soil Present?	Yes	No **X**	within a Wetland?	Yes	No **X**
Wetland Hydrology Present?	Yes	No **X**	If yes, optional wetland site ID:		

Remarks: **This is an old field. The hydrophytic vegetation criterion is met, but the soils and lack of hydrology indicate that this is an upland.**

VEGETATION - Use scientific names for plants.

Sampling Point: **DP-13 (upl)**

Tree Stratum (Plot size: **30'R**)	Absolute % Cover	Dominant Species	Indicator Status
1. **-**			
2.			
3.			
4.			
5.			
6.			
7.			
	0%	= Total Cover	

Sapling/Shrub Stratum (Plot size: **15'R**)			
1. ***Cornus alba***	**10%**	**Y**	**FACW**
2. ***Rhamnus cathartica***	**5%**	**Y**	**FAC**
3.			
4.			
5.			
6.			
7.			
	15%	= Total Cover	

Herb Stratum (Plot size: **5'R**)			
1. ***Poa pratensis***	**80%**	**Y**	**FAC**
2. ***Melilotus albus***	**40%**	**Y**	**FACU**
3. ***Solidago canadensis***	**25%**	**N**	**FACU**
4. ***Aster pilosus***	**10%**	**N**	**FACU**
5.			
6.			
7.			
8.			
9.			
10.			
11.			
12.			
13.			
14.			
	155%	= Total Cover	

Woody Vine Stratum (Plot size: **30'R)**)			
1. **-**			
2.			
3.			
4.			
	0%	= Total Cover	

Dominance Test Worksheet:

Number of Dominant Species That Are OBL, FACW, or FAC: **3** (A)

Total Number of Dominant Species Across All Strata: **4** (B)

Percent of Dominant Species That Are OBL, FACW, or FAC: **75%** (A/B)

Prevalence Index Worksheet:

Total % Cover of:		Multiply by:	
OBL species		x 1 =	
FACW species		x 2 =	
FAC species		x 3 =	
FACU species		x 4 =	
UPL species		x 5 =	
Column Totals:	(A)		(B)

Prevalence Index B/A =

Hydrophytic Vegetation Indicators:

- Rapid Test for Hydrophitic Vegetation
- **X** Dominance Test is >50%
- Prevalence Index is ≤ 3.0[1]
- Morphological Adaptations[1] (Provide supporting data in Remarks or on separate sheet)
- Problematic Hydrophytic Vegetation[1] (Explain)

[1] Indicators of hydric soil and wetland hydrology must be present, unless disturbed or problematic.

Hydrophytic Vegetation Present? Yes **X** No

Remarks: **This is an old field, but the hydrophytic vegetation criterion is met due to a dominance of Kentucky blue grass. Te soils and lack of hydrology indicate that this is an upland area.**

SOIL Sampling Point: **DP-13 (upl)**

Profile Description: (Describe to the depth needed to document the indicator or confirm the absence of indicators.)

Depth	Matrix		Redox Features					
(inches)	Color (moist)	%	Color (moist)	%	Type[1]	Loc[2]	Texture	Remarks
0-10	**10YR 3/2**	**100**	**-**	**-**			**silty clay loam**	
10-12	**10YR 3/2**	**95**	**10YR 5/6**	**5**	**C**	**M**	**silty clay loam**	
12-20+	**7.5YR 4/3**	**95**	**10YR 5/6**	**5**	**C**	**M**	**silty clay loam**	

[1] Type: C=Concentration, D=Depletion, RM=Reduced Matrix, CS=Covered or Coated Sand Grains. [2] Location: PL=Pore Lining, M=Matrix

Hydric Soil Indicators:

- ___ Histosol (A1)
- ___ Histic Epipedon (A2)
- ___ Black Histic (A3)
- ___ Hydrogen Sulfide (A4)
- ___ Stratified Layers (A5)
- ___ 2 cm Much (A10)
- ___ Depleted Below Dark Surface (A11)
- ___ Thick Dark Surface (A12)
- ___ Sandy Mucky Mineral (S1)
- ___ Sandy Gleyed Matrix (S4)
- ___ Sandy Redox (S5)
- ___ Stripped Matrix (S6)
- ___ Loamy Mucky Mineral (F1)
- ___ Loamy Gleyed Matrix (F2)
- ___ Depleted Matrix (F3)
- ___ Redox Dark Surface (F6)
- ___ Depleted Dark Surface (F7)
- ___ Redox Depressions (F8)

Indicators for Problematic Hydric Soils[3]:

- ___ Coast Prairie Redox (A16) **(LRR,K,L,R)**
- ___ Dark Surface (S7) **(LRR,K,L)**
- ___ 5 cm mucky peat or peat (S3) **(LRR,K,L)**
- ___ Iron-Manganese Masses (F12) **(LRR,K,L,R)**
- ___ Very Shallow Dark Surface (TF12)
- ___ Other (Explain in Remarks)

[3] Indicators of hydrophytic evegetation and wetland hydrology must be present, unless disturbed or problematic.

Restrictive Layer (if observed):

Type: **n/a**

Depth (inches): **n/a**

Hydric Soil Present? **Yes** ___ **No** **X**

Remarks: **The hydric soil criterion is not met.**

HYDROLOGY

Wetland Hydrology Indicators:

Primary Indicators (minimum of one is required; check all that apply)

- ___ Surface Water (A1)
- ___ High Water Table (A2)
- ___ Saturation (A3)
- ___ Water Marks (B1)
- ___ Sediment Deposits (B2)
- ___ Drift Deposits (B3)
- ___ Algal Mat or Crust (B4)
- ___ Iron Deposits (B5)
- ___ Inundation Visible on Aerial Imagery (B7)
- ___ Sparsely Vegetated Concave Surface (B8)
- ___ Water-Stained Leaves (B9)
- ___ Aquatic Fauna (B13)
- ___ True Aquatic Plants (B14)
- ___ Hydrogen Sulfide Odor (C1)
- ___ Oxidized Rhizospheres on Living Roots (C3)
- ___ Presence of Reduced Iron (C4)
- ___ Recent Iron Reduction in Tilled Soils (C6)
- ___ Thin Muck Surface (C7)
- ___ Gauge or Well Data (D9)
- ___ Other (Explain in Remarks)

Secondary Indicators (minimum of two required)

- ___ Surface Soil Cracks (B6)
- ___ Drainage Patterns (B10)
- ___ Dry-Season Water Table (C2)
- ___ Crayfish Burrows (C8)
- ___ Saturation Visible on Aerial Imagery (C9)
- ___ Stunted or Stressed Plants (D1)
- ___ Geomorphic Position (D2)
- ___ FAC-Neutral Test (D5)

Field Observations:

Surface Water Present? Yes ___ No **X** Depth (inches): ___

Water Table Present? Yes ___ No **X** Depth (inches): ___

Saturation Present? (includes capillary fringe) Yes ___ No **X** Depth (inches): ___

Wetland Hydrology Present? **Yes** ___ **No** **X**

Describe Recorded Data (stream gauge, monitoring well, aerial photos, previous inspections), if available:

Local WETS table, NOAA's AHPS map, NRCS Soils Map, recent aerial photos

Remarks: **There is no hydrology in this area. The criterion is not met.**

WETLAND DETERMINATION DATA FORM - Midwest Region

Project/Site: **Creekside Crossing** City/County: **Pleasant Prairie / Kenosha** Sampling Date: **Oct 20th, 2014**

Applicant/Owner: **Bear Development, LLC** State: **WI** Sampling Point: **DP-14 (wtd)**

Investigator(s): **Heather Patti, Nancy Wilson** Section, Township, Range: **SW 1/4 Sec 15, T1N R22E**

Landform (hillslope, terrace, etc.): **wetland depression** Local relief (concave, convex, none): **concave**

Slope (%): **-** Lat: Long: Datum:

Soil Map Unit Name: **Ashkum silty clay loam (AtA), 0-2% slopes, hydric** WWI Classification: **none**

Are climatic / hydrologic conditions on the site typical for this time of year? Yes **X** No (if no, explain in Remarks)

Are Vegetation **N** Soil **N** or Hydrology **N** significantly disturbed? Are "Normal Circumstances" present? Yes **X** No

Are Vegetation **N** Soil **N** or Hydrology **Y*** naturally problematic? (if needed, explain any answers in Remarks)

SUMMARY OF FINDINGS --- Attach site map showing sampling point locations, transects, important features, etc.

Hydrophytic Vegetation Present?	Yes **X**	No	Is the Sampled Area		
Hydric Soil Present?	Yes **X**	No	within a Wetland?	Yes **X**	No
Wetland Hydrology Present?	Yes **X**	No	If yes, optional wetland site ID:	**W-8**	

Remarks: **This is a fresh (wet) meadow that was likely formed due to previous grading activities. It is connected to the W-2 to the east by a narrow channel. *This area is depressional and recieves seasonal hydrology, thus making it naturally problematic.**

VEGETATION - Use scientific names for plants.

Sampling Point: **DP-14 (wtd)**

Tree Stratum (Plot size: **30'R**)	Absolute % Cover	Dominant Species	Indicator Status
1. **-**			
2.			
3.			
4.			
5.			
6.			
7.			
	0%	= Total Cover	

Sapling/Shrub Stratum (Plot size: **15'R**)			
1. ***Populus deltoides***	**5%**	**Y**	**FAC**
2.			
3.			
4.			
5.			
6.			
7.			
	5%	= Total Cover	

Herb Stratum (Plot size: **5'R**)			
1. ***Phalaris arundinacea***	**85%**	**Y**	**FACW**
2. ***Phragmites australis***	**5%**	**N**	**FACW**
3. ***Alisma subcordatum***	**5%**	**N**	**OBL**
4. ***Agrostis gigantea***	**5%**	**N**	**FACW**
5. ***Juncus torreyi***	**5%**	**N**	**FACW**
6. ***Aster puniceus***	**5%**	**N**	**OBL**
7.			
8.			
9.			
10.			
11.			
12.			
13.			
14.			
	110%	= Total Cover	

Woody Vine Stratum (Plot size: **30'R**)			
1. **-**			
2.			
3.			
4.			
	0%	= Total Cover	

Dominance Test Worksheet:

Number of Dominant Species That Are OBL, FACW, or FAC: **2** (A)

Total Number of Dominant Species Across All Strata: **2** (B)

Percent of Dominant Species That Are OBL, FACW, or FAC: **100%** (A/B)

Prevalence Index Worksheet:

Total % Cover of:		Multiply by:	
OBL species		x 1 =	
FACW species		x 2 =	
FAC species		x 3 =	
FACU species		x 4 =	
UPL species		x 5 =	
Column Totals:	(A)		(B)

Prevalence Index B/A =

Hydrophytic Vegetation Indicators:

- Rapid Test for Hydrophitic Vegetation
- **X** Dominance Test is >50%
- Prevalence Index is ≤ 3.0[1]
- Morphological Adaptations[1] (Provide supporting data in Remarks or on separate sheet)
- Problematic Hydrophytic Vegetation[1] (Explain)

[1] Indicators of hydric soil and wetland hydrology must be present, unless disturbed or problematic.

Hydrophytic Vegetation Present? Yes **X** No

Remarks: **This is a fresh (wet) meadow that was likely formed due to previous grading activities. The hydrophytic vegetation criterion is met.**

SOIL Sampling Point: **DP-14 (wtd)**

Profile Description: (Describe to the depth needed to document the indicator or confirm the absence of indicators.)

Depth	Matrix		Redox Features					
(inches)	Color (moist)	%	Color (moist)	%	Type[1]	Loc[2]	Texture	Remarks
0-5	**10YR 3/2**	**90**	**10YR 5/6**	**10**	**C**	**M**	**silty clay**	***small gravel fill is present**
5-12+*	**10YR 5/3**	**75**	**10YR 5/6**	**25**	**C**	**M**	**clay**	**throughout the profile**

[1] Type: C=Concentration, D=Depletion, RM=Reduced Matrix, CS=Covered or Coated Sand Grains. [2] Location: PL=Pore Lining, M=Matrix

Hydric Soil Indicators:

- ___ Histosol (A1)
- ___ Histic Epipedon (A2)
- ___ Black Histic (A3)
- ___ Hydrogen Sulfide (A4)
- ___ Stratified Layers (A5)
- ___ 2 cm Much (A10)
- ___ Depleted Below Dark Surface (A11)
- ___ Thick Dark Surface (A12)
- ___ Sandy Mucky Mineral (S1)
- ___ Sandy Gleyed Matrix (S4)
- ___ Sandy Redox (S5)
- ___ Stripped Matrix (S6)
- ___ Loamy Mucky Mineral (F1)
- ___ Loamy Gleyed Matrix (F2)
- ___ Depleted Matrix (F3)
- **X** Redox Dark Surface (F6)
- ___ Depleted Dark Surface (F7)
- ___ Redox Depressions (F8)

Indicators for Problematic Hydric Soils[3]:

- ___ Coast Prairie Redox (A16) **(LRR,K,L,R)**
- ___ Dark Surface (S7) **(LRR,K,L)**
- ___ 5 cm mucky peat or peat (S3) **(LRR,K,L)**
- ___ Iron-Manganese Masses (F12) **(LRR,K,L,R)**
- ___ Very Shallow Dark Surface (TF12)
- ___ Other (Explain in Remarks)

[3] Indicators of hydrophytic evegetation and wetland hydrology must be present, unless disturbed or problematic.

Restrictive Layer (if observed):

Type: **gravel fill**

Depth (inches): **12**

Hydric Soil Present? **Yes** **X** **No** ___

Remarks: **There is gravel fill at 12" preventing observations of the soil profile past that point. The hydric soil criterion is met, however.**

HYDROLOGY

Wetland Hydrology Indicators:

Primary Indicators (minimum of one is required; check all that apply)

- **X** Surface Water (A1)
- **X** High Water Table (A2)
- **X** Saturation (A3)
- ___ Water Marks (B1)
- ___ Sediment Deposits (B2)
- ___ Drift Deposits (B3)
- ___ Algal Mat or Crust (B4)
- ___ Iron Deposits (B5)
- ___ Inundation Visible on Aerial Imagery (B7)
- ___ Sparsely Vegetated Concave Surface (B8)
- ___ Water-Stained Leaves (B9)
- ___ Aquatic Fauna (B13)
- ___ True Aquatic Plants (B14)
- ___ Hydrogen Sulfide Odor (C1)
- ___ Oxidized Rhizospheres on Living Roots (C3)
- ___ Presence of Reduced Iron (C4)
- ___ Recent Iron Reduction in Tilled Soils (C6)
- ___ Thin Muck Surface (C7)
- ___ Gauge or Well Data (D9)
- ___ Other (Explain in Remarks)

Secondary Indicators (minimum of two required)

- ___ Surface Soil Cracks (B6)
- ___ Drainage Patterns (B10)
- ___ Dry-Season Water Table (C2)
- **X** Crayfish Burrows (C8)
- ___ Saturation Visible on Aerial Imagery (C9)
- ___ Stunted or Stressed Plants (D1)
- **X** Geomorphic Position (D2)
- **X** FAC-Neutral Test (D5)

Field Observations:

Surface Water Present?	Yes	**X**	No ___	Depth (inches):	**1**
Water Table Present?	Yes	**X**	No ___	Depth (inches):	**0**
Saturation Present? (includes capillary fringe)	Yes	**X**	No ___	Depth (inches):	**0**

Wetland Hydrology Present? **Yes** **X** **No** ___

Describe Recorded Data (stream gauge, monitoring well, aerial photos, previous inspections), if available:

Local WETS table, NOAA's AHPS map, NRCS Soils Map, recent aerial photos, FSA crop slides

Remarks: **There is 1" of surface water perched on the clay. Multiple secondary, hydrology indicators are present as well.**

WETLAND DETERMINATION DATA FORM - Midwest Region

Project/Site: **Creekside Crossing** City/County: **Pleasant Prairie / Kenosha** Sampling Date: **Oct 20th, 2014**

Applicant/Owner: **Bear Development, LLC** State: **WI** Sampling Point: **DP-15 (upl)**

Investigator(s): **Heather Patti, Nancy Wilson** Section, Township, Range: **SW 1/4 Sec 15, T1N R22E**

Landform (hillslope, terrace, etc.): **terrace** Local relief (concave, convex, none): **none**

Slope (%): **-** Lat: Long: Datum:

Soil Map Unit Name: **Sebewa silt loam (So), clayey substratum, hydric soil** WWI Classification: **none**

Are climatic / hydrologic conditions on the site typical for this time of year? Yes **X** No (if no, explain in Remarks)

Are Vegetation **N** Soil **N** or Hydrology **N** significantly disturbed? Are "Normal Circumstances" present? Yes **X** No

Are Vegetation **N** Soil **N** or Hydrology **N** naturally problematic? (if needed, explain any answers in Remarks)

SUMMARY OF FINDINGS --- Attach site map showing sampling point locations, transects, important features, etc.

Hydrophytic Vegetation Present?	Yes		No	**X**	Is the Sampled Area
Hydric Soil Present?	Yes		No	**X**	within a Wetland? Yes No **X**
Wetland Hydrology Present?	Yes		No	**X**	If yes, optional wetland site ID:

Remarks: **This is an old field with some scattered reed canary grass and red osier dogwood. None of the three criteria are met, however.**

VEGETATION - Use scientific names for plants.

Sampling Point: **DP-15 (upl)**

Tree Stratum (Plot size: **30'R**)	Absolute % Cover	Dominant Species	Indicator Status
1. **-**			
2.			
3.			
4.			
5.			
6.			
7.			
	0%	= Total Cover	

Sapling/Shrub Stratum (Plot size: **15'R**)			
1. ***Juniperus virginiana***	**10%**	**Y**	**FACU**
2. ***Lonicera X bella***	**5%**	**Y**	**FACU**
3. ***Rhamnus cathartica***	**5%**	**Y**	**FAC**
4.			
5.			
6.			
7.			
	20%	= Total Cover	

Herb Stratum (Plot size: **5'R**)			
1. ***Daucus carota***	**60%**	**Y**	**UPL**
2. ***Cornus alba***	**40%**	**Y**	**FACW**
3. ***Melilotus albus***	**20%**	**N**	**FACU**
4. ***Aster pilosum***	**10%**	**N**	**FACU**
5. ***Phalaris arundinacea***	**10%**	**N**	**FACW**
6.			
7.			
8.			
9.			
10.			
11.			
12.			
13.			
14.			
	140%	= Total Cover	

Woody Vine Stratum (Plot size: **30'R)**)			
1. **-**			
2.			
3.			
4.			
	0%	= Total Cover	

Dominance Test Worksheet:

Number of Dominant Species That Are OBL, FACW, or FAC: **2** (A)

Total Number of Dominant Species Across All Strata: **5** (B)

Percent of Dominant Species That Are OBL, FACW, or FAC: **40%** (A/B)

Prevalence Index Worksheet:

Total % Cover of:		Multiply by:	
OBL species		x 1 =	
FACW species		x 2 =	
FAC species		x 3 =	
FACU species		x 4 =	
UPL species		x 5 =	
Column Totals:	(A)		(B)

Prevalence Index B/A =

Hydrophytic Vegetation Indicators:

- Rapid Test for Hydrophitic Vegetation
- Dominance Test is >50%
- Prevalence Index is ≤ 3.0[1]
- Morphological Adaptations[1] (Provide supporting data in Remarks or on separate sheet)
- Problematic Hydrophytic Vegetation[1] (Explain)

[1] Indicators of hydric soil and wetland hydrology must be present, unless disturbed or problematic.

Hydrophytic Vegetation Present? Yes No **X**

Remarks: **This is an old field with scattered reed canary grass and red osier. The hydrophytic vegetation criterion is not met, however.**

SOIL Sampling Point: **DP-15 (upl)**

Profile Description: (Describe to the depth needed to document the indicator or confirm the absence of indicators.)

Depth (inches)	Matrix Color (moist)	Matrix %	Redox Features Color (moist)	Redox Features %	Redox Features Type[1]	Redox Features Loc[2]	Texture	Remarks
0-11	**10YR 3/1**	**100**	**-**	**-**			**silt loam**	
11-20+	**10YR 4/3**	**90**	**10YR 5/6**	**10**	**C**	**M**	**silty clay loam**	

[1] Type: C=Concentration, D=Depletion, RM=Reduced Matrix, CS=Covered or Coated Sand Grains. [2] Location: PL=Pore Lining, M=Matrix

Hydric Soil Indicators:

- ___ Histosol (A1)
- ___ Histic Epipedon (A2)
- ___ Black Histic (A3)
- ___ Hydrogen Sulfide (A4)
- ___ Stratified Layers (A5)
- ___ 2 cm Much (A10)
- ___ Depleted Below Dark Surface (A11)
- ___ Thick Dark Surface (A12)
- ___ Sandy Mucky Mineral (S1)
- ___ Sandy Gleyed Matrix (S4)
- ___ Sandy Redox (S5)
- ___ Stripped Matrix (S6)
- ___ Loamy Mucky Mineral (F1)
- ___ Loamy Gleyed Matrix (F2)
- ___ Depleted Matrix (F3)
- ___ Redox Dark Surface (F6)
- ___ Depleted Dark Surface (F7)
- ___ Redox Depressions (F8)

Indicators for Problematic Hydric Soils[3]:

- ___ Coast Prairie Redox (A16) **(LRR,K,L,R)**
- ___ Dark Surface (S7) **(LRR,K,L)**
- ___ 5 cm mucky peat or peat (S3) **(LRR,K,L)**
- ___ Iron-Manganese Masses (F12) **(LRR,K,L,R)**
- ___ Very Shallow Dark Surface (TF12)
- ___ Other (Explain in Remarks)

[3] Indicators of hydrophytic evegetation and wetland hydrology must be present, unless disturbed or problematic.

Restrictive Layer (if observed):

Type: **n/a**

Depth (inches): **n/a**

Hydric Soil Present? **Yes** ___ **No** **X**

Remarks: **The hydric soil criterion is not met.**

HYDROLOGY

Wetland Hydrology Indicators:

Primary Indicators (minimum of one is required; check all that apply)

- ___ Surface Water (A1)
- ___ High Water Table (A2)
- ___ Saturation (A3)
- ___ Water Marks (B1)
- ___ Sediment Deposits (B2)
- ___ Drift Deposits (B3)
- ___ Algal Mat or Crust (B4)
- ___ Iron Deposits (B5)
- ___ Inundation Visible on Aerial Imagery (B7)
- ___ Sparsely Vegetated Concave Surface (B8)
- ___ Water-Stained Leaves (B9)
- ___ Aquatic Fauna (B13)
- ___ True Aquatic Plants (B14)
- ___ Hydrogen Sulfide Odor (C1)
- ___ Oxidized Rhizospheres on Living Roots (C3)
- ___ Presence of Reduced Iron (C4)
- ___ Recent Iron Reduction in Tilled Soils (C6)
- ___ Thin Muck Surface (C7)
- ___ Gauge or Well Data (D9)
- ___ Other (Explain in Remarks)

Secondary Indicators (minimum of two required)

- ___ Surface Soil Cracks (B6)
- ___ Drainage Patterns (B10)
- ___ Dry-Season Water Table (C2)
- ___ Crayfish Burrows (C8)
- ___ Saturation Visible on Aerial Imagery (C9)
- ___ Stunted or Stressed Plants (D1)
- ___ Geomorphic Position (D2)
- ___ FAC-Neutral Test (D5)

Field Observations:

Surface Water Present? Yes ___ No **X** Depth (inches): ___

Water Table Present? Yes ___ No **X** Depth (inches): ___

Saturation Present? (includes capillary fringe) Yes ___ No **X** Depth (inches): ___

Wetland Hydrology Present? **Yes** ___ **No** **X**

Describe Recorded Data (stream gauge, monitoring well, aerial photos, previous inspections), if available:

Local WETS table, NOAA's AHPS map, NRCS Soils Map, recent aerial photos.

Remarks: **There is no hydrology in this area. The criterion is not met.**

WETLAND DETERMINATION DATA FORM - Midwest Region

Project/Site: **Creekside Crossing** City/County: **Pleasant Prairie / Kenosha** Sampling Date: **Oct 20th, 2014**

Applicant/Owner: **Bear Development, LLC** State: **WI** Sampling Point: **DP-16 (wtd)**

Investigator(s): **Heather Patti, Nancy Wilson** Section, Township, Range: **SW 1/4 Sec 15, T1N R22E**

Landform (hillslope, terrace, etc.): **wetland depression** Local relief (concave, convex, none): **slightly concave**

Slope (%): **-** Lat: Long: Datum:

Soil Map Unit Name: **Sebewa silt loam (So), clayey substratum, hydric soil** WWI Classification: **none**

Are climatic / hydrologic conditions on the site typical for this time of year? Yes **X** No (if no, explain in Remarks)

Are Vegetation **N** Soil **N** or Hydrology **N** significantly disturbed? Are "Normal Circumstances" present? Yes **X** No

Are Vegetation **N** Soil **N** or Hydrology **Y*** naturally problematic? (if needed, explain any answers in Remarks)

SUMMARY OF FINDINGS --- Attach site map showing sampling point locations, transects, important features, etc.

Hydrophytic Vegetation Present?	Yes **X**	No	Is the Sampled Area		
Hydric Soil Present?	Yes **X**	No	within a Wetland?	Yes **X**	No
Wetland Hydrology Present?	Yes **X**	No	If yes, optional wetland site ID:	**W-10**	

Remarks: **This is a fresh (wet) meadow. *This area is depressional and recieves seasonal hydrology, thus making it naturally problematic. All three of the criteria are met.**

VEGETATION - Use scientific names for plants.

Sampling Point: **DP-16 (wtd)**

Tree Stratum (Plot size: **30'R**)	Absolute % Cover	Dominant Species	Indicator Status
1. ***Fraxinus pennsylvanica***	**5%**	**Y**	**FACW**
2.			
3.			
4.			
5.			
6.			
7.			
	5% = Total Cover		

Sapling/Shrub Stratum (Plot size: **15'R**)			
1. **-**			
2.			
3.			
4.			
5.			
6.			
7.			
	0% = Total Cover		

Herb Stratum (Plot size: **5'R**)			
1. ***Phalaris arundinacea***	**100%**	**Y**	**FACW**
2. ***Apocynum cannabinum***	**10%**	**N**	**FAC**
3.			
4.			
5.			
6.			
7.			
8.			
9.			
10.			
11.			
12.			
13.			
14.			
	110% = Total Cover		

Woody Vine Stratum (Plot size: **30'R**)			
1. **-**			
2.			
3.			
4.			
	0% = Total Cover		

Dominance Test Worksheet:

Number of Dominant Species That Are OBL, FACW, or FAC: **2** (A)

Total Number of Dominant Species Across All Strata: **2** (B)

Percent of Dominant Species That Are OBL, FACW, or FAC: **100%** (A/B)

Prevalence Index Worksheet:

Total % Cover of:		Multiply by:	
OBL species		x 1 =	
FACW species		x 2 =	
FAC species		x 3 =	
FACU species		x 4 =	
UPL species		x 5 =	
Column Totals:	(A)		(B)

Prevalence Index B/A =

Hydrophytic Vegetation Indicators:

X Rapid Test for Hydrophitic Vegetation

Dominance Test is >50%

Prevalence Index is ≤ 3.0[1]

Morphological Adaptations[1] (Provide supporting data in Remarks or on separate sheet)

Problematic Hydrophytic Vegetation[1] (Explain)

[1] Indicators of hydric soil and wetland hydrology must be present, unless disturbed or problematic.

Hydrophytic Vegetation Present? Yes **X** No

Remarks: **This is a fresh (wet) meadow. The hydrophytic vegetation criterion is met.**

SOIL Sampling Point: **DP-16 (wtd)**

Profile Description: (Describe to the depth needed to document the indicator or confirm the absence of indicators.)

Depth	Matrix		Redox Features					
(inches)	Color (moist)	%	Color (moist)	%	Type[1]	Loc[2]	Texture	Remarks
0-8	10YR 2/1	100	-	-			silty clay loam	
8-18+	10YR 2/1	95	10YR 4/6	5	C	M	silty clay loam	

[1] Type: C=Concentration, D=Depletion, RM=Reduced Matrix, CS=Covered or Coated Sand Grains. [2] Location: PL=Pore Lining, M=Matrix

Hydric Soil Indicators:

- ___ Histosol (A1)
- ___ Histic Epipedon (A2)
- ___ Black Histic (A3)
- ___ Hydrogen Sulfide (A4)
- ___ Stratified Layers (A5)
- ___ 2 cm Much (A10)
- ___ Depleted Below Dark Surface (A11)
- ___ Thick Dark Surface (A12)
- ___ Sandy Mucky Mineral (S1)
- ___ Sandy Gleyed Matrix (S4)
- ___ Sandy Redox (S5)
- ___ Stripped Matrix (S6)
- ___ Loamy Mucky Mineral (F1)
- ___ Loamy Gleyed Matrix (F2)
- ___ Depleted Matrix (F3)
- X Redox Dark Surface (F6)
- ___ Depleted Dark Surface (F7)
- ___ Redox Depressions (F8)

Indicators for Problematic Hydric Soils[3]:

- ___ Coast Prairie Redox (A16) **(LRR,K,L,R)**
- ___ Dark Surface (S7) **(LRR,K,L)**
- ___ 5 cm mucky peat or peat (S3) **(LRR,K,L)**
- ___ Iron-Manganese Masses (F12) **(LRR,K,L,R)**
- ___ Very Shallow Dark Surface (TF12)
- ___ Other (Explain in Remarks)

[3] Indicators of hydrophytic evegetation and wetland hydrology must be present, unless disturbed or problematic.

Restrictive Layer (if observed):
Type: **water**
Depth (inches): **12**

Hydric Soil Present? **Yes** X **No** ___

Remarks: **The water table is present at 12" preventing observations of the soil profile past this point. The hydric soil criterion is met, however.**

HYDROLOGY

Wetland Hydrology Indicators:

Primary Indicators (minimum of one is required; check all that apply)

- ___ Surface Water (A1)
- X High Water Table (A2)
- X Saturation (A3)
- ___ Water Marks (B1)
- ___ Sediment Deposits (B2)
- ___ Drift Deposits (B3)
- ___ Algal Mat or Crust (B4)
- ___ Iron Deposits (B5)
- ___ Inundation Visible on Aerial Imagery (B7)
- ___ Sparsely Vegetated Concave Surface (B8)
- ___ Water-Stained Leaves (B9)
- ___ Aquatic Fauna (B13)
- ___ True Aquatic Plants (B14)
- ___ Hydrogen Sulfide Odor (C1)
- ___ Oxidized Rhizospheres on Living Roots (C3)
- ___ Presence of Reduced Iron (C4)
- ___ Recent Iron Reduction in Tilled Soils (C6)
- ___ Thin Muck Surface (C7)
- ___ Gauge or Well Data (D9)
- ___ Other (Explain in Remarks)

Secondary Indicators (minimum of two required)

- ___ Surface Soil Cracks (B6)
- ___ Drainage Patterns (B10)
- ___ Dry-Season Water Table (C2)
- X Crayfish Burrows (C8)
- ___ Saturation Visible on Aerial Imagery (C9)
- ___ Stunted or Stressed Plants (D1)
- X Geomorphic Position (D2)
- X FAC-Neutral Test (D5)

Field Observations:

Surface Water Present?	Yes	___	No	X	Depth (inches): ___
Water Table Present?	Yes	X	No	___	Depth (inches): 12
Saturation Present? (includes capillary fringe)	Yes	X	No	___	Depth (inches): 9

Wetland Hydrology Present? **Yes** X **No** ___

Describe Recorded Data (stream gauge, monitoring well, aerial photos, previous inspections), if available:

Local WETS table, NOAA's AHPS map, NRCS Soils Map, recent aerial photos.

Remarks: **The water table is present at 12" with saturation at 9". Multiple secondary hydrology indicators are present as well. The criterion is met.**

WETLAND DETERMINATION DATA FORM - Midwest Region

Project/Site: **Creekside Crossing** City/County: **Pleasant Prairie / Kenosha** Sampling Date: **Oct 20th, 2014**

Applicant/Owner: **Bear Development, LLC** State: **WI** Sampling Point: **DP-17 (upl)**

Investigator(s): **Heather Patti, Nancy Wilson** Section, Township, Range: **SW 1/4 Sec 15, T1N R22E**

Landform (hillslope, terrace, etc.): **slight depression** Local relief (concave, convex, none): **slightly concave**

Slope (%): **-** Lat: Long: Datum:

Soil Map Unit Name: **Sebewa silt loam (So), clayey substratum, hydric soil** WWI Classification: **none**

Are climatic / hydrologic conditions on the site typical for this time of year? Yes **X** No (if no, explain in Remarks)

Are Vegetation **N** Soil **N** or Hydrology **N** significantly disturbed? Are "Normal Circumstances" present? Yes **X** No

Are Vegetation **N** Soil **N** or Hydrology **N** naturally problematic? (if needed, explain any answers in Remarks)

SUMMARY OF FINDINGS --- Attach site map showing sampling point locations, transects, important features, etc.

Hydrophytic Vegetation Present?	Yes **X**	No	Is the Sampled Area		
Hydric Soil Present?	Yes	No **X**	within a Wetland?	Yes	No **X**
Wetland Hydrology Present?	Yes	No **X**	If yes, optional wetland site ID:		

Remarks: **Reed canary grass dominates this area, but the soils and hydrology indicate that it is an upland area.**

VEGETATION - Use scientific names for plants.

Sampling Point: **DP-17 (upl)**

Tree Stratum (Plot size: **30'R**)	Absolute % Cover	Dominant Species	Indicator Status
1. ***Fraxinus pennsylvanica***	**60%**	**Y**	**FACW**
2.			
3.			
4.			
5.			
6.			
7.			
	60% = Total Cover		

Sapling/Shrub Stratum (Plot size: **15'R**)			
1. ***Rosa multiflora***	**10%**	**Y**	**FACU**
2. ***Cornus alba***	**5%**	**Y**	**FACW**
3.			
4.			
5.			
6.			
7.			
	15% = Total Cover		

Herb Stratum (Plot size: **5'R**)			
1. ***Phalaris arundinacea***	**90%**	**Y**	**FACW**
2. ***Solidago canadensis***	**10%**	**N**	**FACU**
3. ***Fragaria virginiana***	**5%**	**N**	**FACU**
4. ***Geum canadense***	**5%**	**N**	**FAC**
5.			
6.			
7.			
8.			
9.			
10.			
11.			
12.			
13.			
14.			
	110% = Total Cover		

Woody Vine Stratum (Plot size: **30'R)**)			
1. ***Rubus idaeus***	**3%**	**N**	**FACU**
2.			
3.			
4.			
	3% = Total Cover		

Dominance Test Worksheet:

Number of Dominant Species That Are OBL, FACW, or FAC: **3** (A)

Total Number of Dominant Species Across All Strata: **4** (B)

Percent of Dominant Species That Are OBL, FACW, or FAC: **75%** (A/B)

Prevalence Index Worksheet:

Total % Cover of:		Multiply by:	
OBL species		x 1 =	
FACW species		x 2 =	
FAC species		x 3 =	
FACU species		x 4 =	
UPL species		x 5 =	
Column Totals:	(A)		(B)

Prevalence Index B/A =

Hydrophytic Vegetation Indicators:

- Rapid Test for Hydrophitic Vegetation
- **X** Dominance Test is >50%
- Prevalence Index is ≤ 3.0[1]
- Morphological Adaptations[1] (Provide supporting data in Remarks or on separate sheet)
- Problematic Hydrophytic Vegetation[1] (Explain)

[1] Indicators of hydric soil and wetland hydrology must be present, unless disturbed or problematic.

Hydrophytic Vegetation Present? Yes **X** No

Remarks: **Reed canary grass dominates this area. The hydrophytic vegetation criterion is met, but the soils and hydrology indicate that it is an upland area.**

SOIL Sampling Point: **DP-17 (upl)**

Profile Description: (Describe to the depth needed to document the indicator or confirm the absence of indicators.)

Depth (inches)	Matrix Color (moist)	%	Redox Features Color (moist)	%	Type[1]	Loc[2]	Texture	Remarks
0-13	**10YR 3/1**	**100**	**-**	**-**			**silty clay loam**	
13-20+	**10YR 4/3**	**85**	**10YR 5/6**	**15**	**C**	**M**	**silty clay**	

[1] Type: C=Concentration, D=Depletion, RM=Reduced Matrix, CS=Covered or Coated Sand Grains. [2] Location: PL=Pore Lining, M=Matrix

Hydric Soil Indicators:

- ___ Histosol (A1)
- ___ Histic Epipedon (A2)
- ___ Black Histic (A3)
- ___ Hydrogen Sulfide (A4)
- ___ Stratified Layers (A5)
- ___ 2 cm Much (A10)
- ___ Depleted Below Dark Surface (A11)
- ___ Thick Dark Surface (A12)
- ___ Sandy Mucky Mineral (S1)
- ___ Sandy Gleyed Matrix (S4)
- ___ Sandy Redox (S5)
- ___ Stripped Matrix (S6)
- ___ Loamy Mucky Mineral (F1)
- ___ Loamy Gleyed Matrix (F2)
- ___ Depleted Matrix (F3)
- ___ Redox Dark Surface (F6)
- ___ Depleted Dark Surface (F7)
- ___ Redox Depressions (F8)

Indicators for Problematic Hydric Soils[3]:

- ___ Coast Prairie Redox (A16) **(LRR,K,L,R)**
- ___ Dark Surface (S7) **(LRR,K,L)**
- ___ 5 cm mucky peat or peat (S3) **(LRR,K,L)**
- ___ Iron-Manganese Masses (F12) **(LRR,K,L,R)**
- ___ Very Shallow Dark Surface (TF12)
- ___ Other (Explain in Remarks)

[3] Indicators of hydrophytic evegetation and wetland hydrology must be present, unless disturbed or problematic.

Restrictive Layer (if observed):

Type: **n/a**

Depth (inches): **n/a**

Hydric Soil Present? **Yes** ___ **No** **X**

Remarks: **The hydric soil criterion is not met.**

HYDROLOGY

Wetland Hydrology Indicators:

Primary Indicators (minimum of one is required; check all that apply)

- ___ Surface Water (A1)
- ___ High Water Table (A2)
- ___ Saturation (A3)
- ___ Water Marks (B1)
- ___ Sediment Deposits (B2)
- ___ Drift Deposits (B3)
- ___ Algal Mat or Crust (B4)
- ___ Iron Deposits (B5)
- ___ Inundation Visible on Aerial Imagery (B7)
- ___ Sparsely Vegetated Concave Surface (B8)
- ___ Water-Stained Leaves (B9)
- ___ Aquatic Fauna (B13)
- ___ True Aquatic Plants (B14)
- ___ Hydrogen Sulfide Odor (C1)
- ___ Oxidized Rhizospheres on Living Roots (C3)
- ___ Presence of Reduced Iron (C4)
- ___ Recent Iron Reduction in Tilled Soils (C6)
- ___ Thin Muck Surface (C7)
- ___ Gauge or Well Data (D9)
- ___ Other (Explain in Remarks)

Secondary Indicators (minimum of two required)

- ___ Surface Soil Cracks (B6)
- ___ Drainage Patterns (B10)
- ___ Dry-Season Water Table (C2)
- ___ Crayfish Burrows (C8)
- ___ Saturation Visible on Aerial Imagery (C9)
- ___ Stunted or Stressed Plants (D1)
- ___ Geomorphic Position (D2)
- ___ FAC-Neutral Test (D5)

Field Observations:

Surface Water Present? Yes ___ No **X** Depth (inches): ___

Water Table Present? Yes ___ No **X** Depth (inches): ___

Saturation Present? (includes capillary fringe) Yes ___ No **X** Depth (inches): ___

Wetland Hydrology Present? **Yes** ___ **No** **X**

Describe Recorded Data (stream gauge, monitoring well, aerial photos, previous inspections), if available:

Local WETS table, NOAA's AHPS map, NRCS Soils Map, recent aerial photos

Remarks: **There is no hydrology in this area. The criterion is not met.**

WETLAND DETERMINATION DATA FORM - Midwest Region

Project/Site: **Creekside Crossing** City/County: **Pleasant Prairie / Kenosha** Sampling Date: **Oct 23rd, 2014**

Applicant/Owner: **Bear Development, LLC** State: **WI** Sampling Point: **DP-18 (upl)**

Investigator(s): **Heather Patti, Mike Al-wathiqui** Section, Township, Range: **SW 1/4 Sec 15, T1N R22E**

Landform (hillslope, terrace, etc.): **slight backslope** Local relief (concave, convex, none): **convex**

Slope (%): **5%** Lat: Long: Datum:

Soil Map Unit Name: **Beecher silt loam (BcA), 1-3% slopes , hydric via inclusions** WWI Classification: **none**

Are climatic / hydrologic conditions on the site typical for this time of year? Yes **X** No (if no, explain in Remarks)

Are Vegetation **N** Soil **N** or Hydrology **N** significantly disturbed? Are "Normal Circumstances" present? Yes **X** No

Are Vegetation **N** Soil **N** or Hydrology **N** naturally problematic? (if needed, explain any answers in Remarks)

SUMMARY OF FINDINGS --- Attach site map showing sampling point locations, transects, important features, etc.

Hydrophytic Vegetation Present?	Yes **X**	No	Is the Sampled Area		
Hydric Soil Present?	Yes **X**	No	within a Wetland?	Yes	No **X**
Wetland Hydrology Present?	Yes	No **X**	If yes, optional wetland site ID:		

Remarks: **The vegetation is met due to Kentucky blue grass and the soils are also met. However, it is in the best professional judgment of the delineator that this is an upland based on the geomorphic positition, lack of hydrology and the borderline hydrophytic vegetation.**

VEGETATION - Use scientific names for plants.

Sampling Point: **DP-18 (upl)**

Tree Stratum (Plot size: **30'R**)	Absolute % Cover	Dominant Species	Indicator Status
1. **-**			
2.			
3.			
4.			
5.			
6.			
7.			
	0%	= Total Cover	

Sapling/Shrub Stratum (Plot size: **15'R**)			
1. **-**			
2.			
3.			
4.			
5.			
6.			
7.			
	0%	= Total Cover	

Herb Stratum (Plot size: **5'R**)			
1. ***Poa pratensis***	**90%**	**Y**	**FAC**
2. ***Phalaris arundinacea***	**20%**	**N**	**FACW**
3. ***Dactylis glomerata***	**20%**	**N**	**FACU**
4. ***Cirsium arvense***	**5%**	**N**	**FACU**
5.			
6.			
7.			
8.			
9.			
10.			
11.			
12.			
13.			
14.			
	135%	= Total Cover	

Woody Vine Stratum (Plot size: **30'R**)			
1. **-**			
2.			
3.			
4.			
	0%	= Total Cover	

Dominance Test Worksheet:

Number of Dominant Species That Are OBL, FACW, or FAC: **1** (A)

Total Number of Dominant Species Across All Strata: **1** (B)

Percent of Dominant Species That Are OBL, FACW, or FAC: **100%** (A/B)

Prevalence Index Worksheet:

Total % Cover of:		Multiply by:	
OBL species		x 1 =	
FACW species		x 2 =	
FAC species		x 3 =	
FACU species		x 4 =	
UPL species		x 5 =	
Column Totals:	(A)		(B)

Prevalence Index B/A =

Hydrophytic Vegetation Indicators:

- Rapid Test for Hydrophitic Vegetation
- **X** Dominance Test is >50%
- Prevalence Index is ≤ 3.0[1]
- Morphological Adaptations[1] (Provide supporting data in Remarks or on separate sheet)
- Problematic Hydrophytic Vegetation[1] (Explain)

[1] Indicators of hydric soil and wetland hydrology must be present, unless disturbed or problematic.

Hydrophytic Vegetation Present? Yes **X** No

Remarks: **The hydrophytic vegetation criterion is met due to a dominance of Kentucky blue grass.**

SOIL Sampling Point: **DP-18 (upl)**

Profile Description: (Describe to the depth needed to document the indicator or confirm the absence of indicators.)

Depth	Matrix		Redox Features					
(inches)	Color (moist)	%	Color (moist)	%	Type[1]	Loc[2]	Texture	Remarks
0-8	**10YR 3/1**	**80**	**-**	**-**			**silty clay loam**	
	10YR 5/3	**20**	**-**	**-**				
8-24+	**10YR 3/1**	**80**	**10YR 5/6**	**10**	**C**	**M**	**silty clay loam**	
	10YR 5/3	**10**						

[1] Type: C=Concentration, D=Depletion, RM=Reduced Matrix, CS=Covered or Coated Sand Grains. [2] Location: PL=Pore Lining, M=Matrix

Hydric Soil Indicators:

- ___ Histosol (A1)
- ___ Histic Epipedon (A2)
- ___ Black Histic (A3)
- ___ Hydrogen Sulfide (A4)
- ___ Stratified Layers (A5)
- ___ 2 cm Much (A10)
- ___ Depleted Below Dark Surface (A11)
- ___ Thick Dark Surface (A12)
- ___ Sandy Mucky Mineral (S1)
- ___ Sandy Gleyed Matrix (S4)
- ___ Sandy Redox (S5)
- ___ Stripped Matrix (S6)
- ___ Loamy Mucky Mineral (F1)
- ___ Loamy Gleyed Matrix (F2)
- ___ Depleted Matrix (F3)
- **X** Redox Dark Surface (F6)
- ___ Depleted Dark Surface (F7)
- ___ Redox Depressions (F8)

Indicators for Problematic Hydric Soils[3]:

- ___ Coast Prairie Redox (A16) **(LRR,K,L,R)**
- ___ Dark Surface (S7) **(LRR,K,L)**
- ___ 5 cm mucky peat or peat (S3) **(LRR,K,L)**
- ___ Iron-Manganese Masses (F12) **(LRR,K,L,R)**
- ___ Very Shallow Dark Surface (TF12)
- ___ Other (Explain in Remarks)

[3] Indicators of hydrophytic evegetation and wetland hydrology must be present, unless disturbed or problematic.

Restrictive Layer (if observed):

Type: **n/a**

Depth (inches): **n/a**

Hydric Soil Present? **Yes** **X** **No** ___

Remarks: **The soil criterion is met, but the geomorphic position and lack of hydrology indicate that this is an upland.**

HYDROLOGY

Wetland Hydrology Indicators:

Primary Indicators (minimum of one is required; check all that apply)

- ___ Surface Water (A1)
- ___ High Water Table (A2)
- ___ Saturation (A3)
- ___ Water Marks (B1)
- ___ Sediment Deposits (B2)
- ___ Drift Deposits (B3)
- ___ Algal Mat or Crust (B4)
- ___ Iron Deposits (B5)
- ___ Inundation Visible on Aerial Imagery (B7)
- ___ Sparsely Vegetated Concave Surface (B8)
- ___ Water-Stained Leaves (B9)
- ___ Aquatic Fauna (B13)
- ___ True Aquatic Plants (B14)
- ___ Hydrogen Sulfide Odor (C1)
- ___ Oxidized Rhizospheres on Living Roots (C3)
- ___ Presence of Reduced Iron (C4)
- ___ Recent Iron Reduction in Tilled Soils (C6)
- ___ Thin Muck Surface (C7)
- ___ Gauge or Well Data (D9)
- ___ Other (Explain in Remarks)

Secondary Indicators (minimum of two required)

- ___ Surface Soil Cracks (B6)
- ___ Drainage Patterns (B10)
- ___ Dry-Season Water Table (C2)
- ___ Crayfish Burrows (C8)
- ___ Saturation Visible on Aerial Imagery (C9)
- ___ Stunted or Stressed Plants (D1)
- ___ Geomorphic Position (D2)
- ___ FAC-Neutral Test (D5)

Field Observations:

Surface Water Present?	Yes ___	No **X**	Depth (inches): ___
Water Table Present?	Yes ___	No **X**	Depth (inches): ___
Saturation Present? (includes capillary fringe)	Yes ___	No **X**	Depth (inches): ___

Wetland Hydrology Present? **Yes** ___ **No** **X**

Describe Recorded Data (stream gauge, monitoring well, aerial photos, previous inspections), if available:

Local WETS table, NOAA's AHPS map, NRCS Soils Map, recent aerial photos, FSA crop slides

Remarks: **There is no hydrology in this area. The criterion is not met.**

WETLAND DETERMINATION DATA FORM - Midwest Region

Project/Site: **Creekside Crossing** City/County: **Pleasant Prairie / Kenosha** Sampling Date: **Oct 23rd, 2014**

Applicant/Owner: **Bear Development, LLC** State: **WI** Sampling Point: **DP-19 (wtd)**

Investigator(s): **Heather Patti, Mike Al-wathiqui** Section, Township, Range: **SW 1/4 Sec 15, T1N R22E**

Landform (hillslope, terrace, etc.): **wetland depression** Local relief (concave, convex, none): **slightly concave**

Slope (%): **-** Lat: Long: Datum:

Soil Map Unit Name: **Beecher silt loam (BcA), 1-3% slopes, hydric via inclusions** WWI Classification: **none**

Are climatic / hydrologic conditions on the site typical for this time of year? Yes **X** No (if no, explain in Remarks)

Are Vegetation **Y*** Soil **N** or Hydrology **N** significantly disturbed? Are "Normal Circumstances" present? Yes No **X**

Are Vegetation **N** Soil **N** or Hydrology **Y**** naturally problematic? (if needed, explain any answers in Remarks)

SUMMARY OF FINDINGS --- Attach site map showing sampling point locations, transects, important features, etc.

Hydrophytic Vegetation Present?	Yes **X**	No	Is the Sampled Area		
Hydric Soil Present?	Yes **X**	No	within a Wetland?	Yes **X**	No
Wetland Hydrology Present?	Yes **X**	No	If yes, optional wetland site ID:	**W-12**	

Remarks: **This is a fresh (wet) meadow that was likely created by grading activities. *The vegetation is occasionally mowed. **This is a depressional area that recieves seasonal hydrology, thus making it naturally problematic. All three of the criteria are met.**

VEGETATION - Use scientific names for plants.

Sampling Point: **DP-19 (wtd)**

Tree Stratum (Plot size: **30'R**)	Absolute % Cover	Dominant Species	Indicator Status
1. **-**			
2.			
3.			
4.			
5.			
6.			
7.			
	0%	= Total Cover	

Sapling/Shrub Stratum (Plot size: **15'R**)			
1. **-**			
2.			
3.			
4.			
5.			
6.			
7.			
	0%	= Total Cover	

Herb Stratum (Plot size: **5'R**)			
1. ***Poa pratensis***	**40%**	**Y**	**FAC**
2. ***Agrostis gigantea***	**15%**	**N**	**FACW**
3. ***Phalaris arundinacea***	**15%**	**N**	**FACW**
4. ***Echinochloa crus-galli***	**10%**	**N**	**FACW**
5.			
6.			
7.			
8.			
9.			
10.			
11.			
12.			
13.			
14.			
	80%	= Total Cover	

Woody Vine Stratum (Plot size: **30'R)**)			
1. **-**			
2.			
3.			
4.			
	0%	= Total Cover	

Dominance Test Worksheet:

Number of Dominant Species That Are OBL, FACW, or FAC: **1** (A)

Total Number of Dominant Species Across All Strata: **1** (B)

Percent of Dominant Species That Are OBL, FACW, or FAC: **100%** (A/B)

Prevalence Index Worksheet:

Total % Cover of:		Multiply by:	
OBL species		x 1 =	
FACW species		x 2 =	
FAC species		x 3 =	
FACU species		x 4 =	
UPL species		x 5 =	
Column Totals:	(A)		(B)

Prevalence Index B/A =

Hydrophytic Vegetation Indicators:

- Rapid Test for Hydrophitic Vegetation
- **X** Dominance Test is >50%
- Prevalence Index is ≤ 3.0[1]
- Morphological Adaptations[1] (Provide supporting data in Remarks or on separate sheet)
- Problematic Hydrophytic Vegetation[1] (Explain)

[1] Indicators of hydric soil and wetland hydrology must be present, unless disturbed or problematic.

Hydrophytic Vegetation Present? **Yes X** **No**

Remarks: **This is a fresh (wet) meadow that was likely created by grading activities. It is occasionally mowed. The hydrophytic vegetation criterion is met.**

SOIL Sampling Point: **DP-19 (wtd)**

Profile Description: (Describe to the depth needed to document the indicator or confirm the absence of indicators.)

Depth (inches)	Matrix Color (moist)	%	Redox Features Color (moist)	%	Type[1]	Loc[2]	Texture	Remarks
0-4	10YR 3/1	100	-	-			silty clay loam	
4-14	10YR 3/1	80	7.5YR 4/6	20	C	M	silty clay loam	
14-20	10YR 5/3	80	10YR 5/6	20	C	M	silty clay	

[1] Type: C=Concentration, D=Depletion, RM=Reduced Matrix, CS=Covered or Coated Sand Grains. [2] Location: PL=Pore Lining, M=Matrix

Hydric Soil Indicators:

- ___ Histosol (A1)
- ___ Histic Epipedon (A2)
- ___ Black Histic (A3)
- ___ Hydrogen Sulfide (A4)
- ___ Stratified Layers (A5)
- ___ 2 cm Much (A10)
- ___ Depleted Below Dark Surface (A11)
- ___ Thick Dark Surface (A12)
- ___ Sandy Mucky Mineral (S1)
- ___ Sandy Gleyed Matrix (S4)
- ___ Sandy Redox (S5)
- ___ Stripped Matrix (S6)
- ___ Loamy Mucky Mineral (F1)
- ___ Loamy Gleyed Matrix (F2)
- ___ Depleted Matrix (F3)
- X Redox Dark Surface (F6)
- ___ Depleted Dark Surface (F7)
- ___ Redox Depressions (F8)

Indicators for Problematic Hydric Soils[3]:

- ___ Coast Prairie Redox (A16) **(LRR,K,L,R)**
- ___ Dark Surface (S7) **(LRR,K,L)**
- ___ 5 cm mucky peat or peat (S3) **(LRR,K,L)**
- ___ Iron-Manganese Masses (F12) **(LRR,K,L,R)**
- ___ Very Shallow Dark Surface (TF12)
- ___ Other (Explain in Remarks)

[3] Indicators of hydrophytic evegetation and wetland hydrology must be present, unless disturbed or problematic.

Restrictive Layer (if observed):

Type: **n/a**

Depth (inches): **n/a**

Hydric Soil Present? **Yes** X **No** ___

Remarks: **The hydric soil criterion is met.**

HYDROLOGY

Wetland Hydrology Indicators:

Primary Indicators (minimum of one is required; check all that apply)

- ___ Surface Water (A1)
- ___ High Water Table (A2)
- X Saturation (A3)
- ___ Water Marks (B1)
- ___ Sediment Deposits (B2)
- ___ Drift Deposits (B3)
- ___ Algal Mat or Crust (B4)
- ___ Iron Deposits (B5)
- ___ Inundation Visible on Aerial Imagery (B7)
- ___ Sparsely Vegetated Concave Surface (B8)
- ___ Water-Stained Leaves (B9)
- ___ Aquatic Fauna (B13)
- ___ True Aquatic Plants (B14)
- ___ Hydrogen Sulfide Odor (C1)
- ___ Oxidized Rhizospheres on Living Roots (C3)
- ___ Presence of Reduced Iron (C4)
- ___ Recent Iron Reduction in Tilled Soils (C6)
- ___ Thin Muck Surface (C7)
- ___ Gauge or Well Data (D9)
- ___ Other (Explain in Remarks)

Secondary Indicators (minimum of two required)

- ___ Surface Soil Cracks (B6)
- ___ Drainage Patterns (B10)
- ___ Dry-Season Water Table (C2)
- ___ Crayfish Burrows (C8)
- ___ Saturation Visible on Aerial Imagery (C9)
- ___ Stunted or Stressed Plants (D1)
- X Geomorphic Position (D2)
- X FAC-Neutral Test (D5)

Field Observations:

Surface Water Present?	Yes	___	No	X	Depth (inches): ___
Water Table Present?	Yes	___	No	X	Depth (inches): ___
Saturation Present? (includes capillary fringe)	Yes	X	No	___	Depth (inches): 11

Wetland Hydrology Present? **Yes** X **No** ___

Describe Recorded Data (stream gauge, monitoring well, aerial photos, previous inspections), if available:

Local WETS table, NOAA's AHPS map, NRCS Soils Map, recent aerial photos

Remarks: **Saturation is present at 11". Multiple secondary hydrology indicators are present as well. The criterion is met.**

WETLAND DETERMINATION DATA FORM - Midwest Region

Project/Site: **Creekside Crossing** City/County: **Pleasant Prairie / Kenosha** Sampling Date: **Oct 20th, 2014**

Applicant/Owner: **Bear Development, LLC** State: **WI** Sampling Point: **DP-20 (upl)**

Investigator(s): **Heather Patti, Mike Al-wathiqui** Section, Township, Range: **SW 1/4 Sec 15, T1N R22E**

Landform (hillslope, terrace, etc.): **terrace** Local relief (concave, convex, none): **none**

Slope (%): **-** Lat: Long: Datum:

Soil Map Unit Name: **Hebron loam (HeB2), 2-6% slopes, eroded, non-hydric** WWI Classification: **none**

Are climatic / hydrologic conditions on the site typical for this time of year? Yes **X** No (if no, explain in Remarks)

Are Vegetation **N** Soil **N** or Hydrology **N** significantly disturbed? Are "Normal Circumstances" present? Yes **X** No

Are Vegetation **N** Soil **N** or Hydrology **N** naturally problematic? (if needed, explain any answers in Remarks)

SUMMARY OF FINDINGS --- Attach site map showing sampling point locations, transects, important features, etc.

Hydrophytic Vegetation Present?	Yes **X**	No	Is the Sampled Area		
Hydric Soil Present?	Yes	No **X**	within a Wetland?	Yes	No **X**
Wetland Hydrology Present?	Yes	No **X**	If yes, optional wetland site ID:		

Remarks: **This is a young hardwood forest dominated by young green ash and box elder. The hydrophytic vegetation criterion is met, but the soils and lack of hydrology indicate that this is an upland.**

VEGETATION - Use scientific names for plants.

Sampling Point: **DP-20 (upl)**

Tree Stratum (Plot size: **30'R**)	Absolute % Cover	Dominant Species	Indicator Status
1. ***Acer negundo***	**60%**	**Y**	**FAC**
2. ***Fraxinus pennsylvanica***	**40%**	**Y**	**FACW**
3.			
4.			
5.			
6.			
7.			
	100%	= Total Cover	

Sapling/Shrub Stratum (Plot size: **15'R**)			
1. ***Lonicera X bella***	**5%**	**Y**	**FACU**
2.			
3.			
4.			
5.			
6.			
7.			
	5%	= Total Cover	

Herb Stratum (Plot size: **5'R**)			
1. ***Rhamnus cathartica***	**10%**	**Y**	**FAC**
2. ***Hackelia virginiana***	**10%**	**Y**	**FACU**
3. ***Alliaria petiolata***	**10%**	**Y**	**FAC**
4. ***Nepeta cataria***	**5%**	**N**	**FACU**
5.			
6.			
7.			
8.			
9.			
10.			
11.			
12.			
13.			
14.			
	35%	= Total Cover	

Woody Vine Stratum (Plot size: **30'R**)			
1. **-**			
2.			
3.			
4.			
	0%	= Total Cover	

Dominance Test Worksheet:

Number of Dominant Species That Are OBL, FACW, or FAC: **4** (A)

Total Number of Dominant Species Across All Strata: **6** (B)

Percent of Dominant Species That Are OBL, FACW, or FAC: **67%** (A/B)

Prevalence Index Worksheet:

Total % Cover of:		Multiply by:	
OBL species		x 1 =	
FACW species		x 2 =	
FAC species		x 3 =	
FACU species		x 4 =	
UPL species		x 5 =	
Column Totals:	(A)		(B)

Prevalence Index B/A =

Hydrophytic Vegetation Indicators:

- Rapid Test for Hydrophitic Vegetation
- **X** Dominance Test is >50%
- Prevalence Index is ≤ 3.0[1]
- Morphological Adaptations[1] (Provide supporting data in Remarks or on separate sheet)
- Problematic Hydrophytic Vegetation[1] (Explain)

[1] Indicators of hydric soil and wetland hydrology must be present, unless disturbed or problematic.

Hydrophytic Vegetation Present? Yes **X** No

Remarks: **This is a mixed hardwood forest. The hydrophytic vegetation criterion is met, but the soils and lack of hydrology indicate that this is an upland area.**

SOIL Sampling Point: **DP-20 (upl)**

Profile Description: (Describe to the depth needed to document the indicator or confirm the absence of indicators.)

Depth	Matrix		Redox Features					
(inches)	Color (moist)	%	Color (moist)	%	Type[1]	Loc[2]	Texture	Remarks
0-22	**10YR 3/1**	**-**	**-**				**silt loam**	
22-24+	**10YR 3/1**	**95**	**7.5YR 4/6**	**5**	**C**	**M**	**silt loam**	

[1] Type: C=Concentration, D=Depletion, RM=Reduced Matrix, CS=Covered or Coated Sand Grains. [2] Location: PL=Pore Lining, M=Matrix

Hydric Soil Indicators:

- ___ Histosol (A1)
- ___ Histic Epipedon (A2)
- ___ Black Histic (A3)
- ___ Hydrogen Sulfide (A4)
- ___ Stratified Layers (A5)
- ___ 2 cm Much (A10)
- ___ Depleted Below Dark Surface (A11)
- ___ Thick Dark Surface (A12)
- ___ Sandy Mucky Mineral (S1)
- ___ Sandy Gleyed Matrix (S4)
- ___ Sandy Redox (S5)
- ___ Stripped Matrix (S6)
- ___ Loamy Mucky Mineral (F1)
- ___ Loamy Gleyed Matrix (F2)
- ___ Depleted Matrix (F3)
- ___ Redox Dark Surface (F6)
- ___ Depleted Dark Surface (F7)
- ___ Redox Depressions (F8)

Indicators for Problematic Hydric Soils[3]:

- ___ Coast Prairie Redox (A16) **(LRR,K,L,R)**
- ___ Dark Surface (S7) **(LRR,K,L)**
- ___ 5 cm mucky peat or peat (S3) **(LRR,K,L)**
- ___ Iron-Manganese Masses (F12) **(LRR,K,L,R)**
- ___ Very Shallow Dark Surface (TF12)
- ___ Other (Explain in Remarks)

[3] Indicators of hydrophytic evegetation and wetland hydrology must be present, unless disturbed or problematic.

Restrictive Layer (if observed):

Type: **n/a**

Depth (inches): **n/a**

Hydric Soil Present? **Yes** ___ **No** **X**

Remarks: **There is a thick, dark horizon with no redox present in the soil profile until 22". The channelization of the creek may be helping to keep this wooded area dry.**

HYDROLOGY

Wetland Hydrology Indicators:

Primary Indicators (minimum of one is required; check all that apply)

- ___ Surface Water (A1)
- ___ High Water Table (A2)
- ___ Saturation (A3)
- ___ Water Marks (B1)
- ___ Sediment Deposits (B2)
- ___ Drift Deposits (B3)
- ___ Algal Mat or Crust (B4)
- ___ Iron Deposits (B5)
- ___ Inundation Visible on Aerial Imagery (B7)
- ___ Sparsely Vegetated Concave Surface (B8)
- ___ Water-Stained Leaves (B9)
- ___ Aquatic Fauna (B13)
- ___ True Aquatic Plants (B14)
- ___ Hydrogen Sulfide Odor (C1)
- ___ Oxidized Rhizospheres on Living Roots (C3)
- ___ Presence of Reduced Iron (C4)
- ___ Recent Iron Reduction in Tilled Soils (C6)
- ___ Thin Muck Surface (C7)
- ___ Gauge or Well Data (D9)
- ___ Other (Explain in Remarks)

Secondary Indicators (minimum of two required)

- ___ Surface Soil Cracks (B6)
- ___ Drainage Patterns (B10)
- ___ Dry-Season Water Table (C2)
- ___ Crayfish Burrows (C8)
- ___ Saturation Visible on Aerial Imagery (C9)
- ___ Stunted or Stressed Plants (D1)
- ___ Geomorphic Position (D2)
- ___ FAC-Neutral Test (D5)

Field Observations:

Surface Water Present? Yes ___ No **X** Depth (inches): ___

Water Table Present? Yes ___ No **X** Depth (inches): ___

Saturation Present? (includes capillary fringe) Yes ___ No **X** Depth (inches): ___

Wetland Hydrology Present? **Yes** ___ **No** **X**

Describe Recorded Data (stream gauge, monitoring well, aerial photos, previous inspections), if available:

Local WETS table, NOAA's AHPS map, NRCS Soils Map, recent aerial photos

Remarks: **There is no hydrology in this area. The criterion is not met.**

WETLAND DETERMINATION DATA FORM - Midwest Region

Project/Site: **Creekside Crossing** City/County: **Pleasant Prairie / Kenosha** Sampling Date: **Oct 23rd, 2014**

Applicant/Owner: **Bear Development, LLC** State: **WI** Sampling Point: **DP-21 (wtd)**

Investigator(s): **Heather Patti, Mike Al-wathiqui** Section, Township, Range: **SW 1/4 Sec 15, T1N R22E**

Landform (hillslope, terrace, etc.): **stream terrace** Local relief (concave, convex, none): **slightly concave**

Slope (%): **-** Lat: Long: Datum:

Soil Map Unit Name: **Sebewa silt loam (So), clayey substratum, hydric soil** WWI Classification: **T3/E2K**

Are climatic / hydrologic conditions on the site typical for this time of year? Yes **X** No (if no, explain in Remarks)

Are Vegetation **N** Soil **N** or Hydrology **N** significantly disturbed? Are "Normal Circumstances" present? Yes **X** No

Are Vegetation **N** Soil **N** or Hydrology **N** naturally problematic? (if needed, explain any answers in Remarks)

SUMMARY OF FINDINGS --- Attach site map showing sampling point locations, transects, important features, etc.

Hydrophytic Vegetation Present?	Yes **X**	No	Is the Sampled Area	
Hydric Soil Present?	Yes **X**	No	within a Wetland?	Yes **X** No
Wetland Hydrology Present?	Yes **X**	No	If yes, optional wetland site ID:	**W-6**

Remarks: **This is a fresh (wet) meadow fringe on the stream terrace of the unnamed tributary of Jerome Creek. All three of the criteria are met.**

VEGETATION - Use scientific names for plants.

Sampling Point: **DP-21 (wtd)**

Tree Stratum (Plot size: **30'R**)	Absolute % Cover	Dominant Species	Indicator Status
1. ***Fraxinus pennsylvanica***	**20%**	**Y**	**FACW**
2. ***Acer negundo***	**10%**	**Y**	**FAC**
3.			
4.			
5.			
6.			
7.			
	30%	= Total Cover	

Sapling/Shrub Stratum (Plot size: **15'R**)			
1. ***Sambucus canadensis***	**15%**	**Y**	**FACW**
2. ***Rhamnus cathartica***	**5%**	**Y**	**FAC**
3.			
4.			
5.			
6.			
7.			
	20%	= Total Cover	

Herb Stratum (Plot size: **5'R**)			
1. ***Phalaris arundinacea***	**80%**	**Y**	**FACW**
2. ***Alliaria petiolata***	**20%**	**N**	**FAC**
3. ***Persicaria amphibia***	**10%**	**N**	**OBL**
4.			
5.			
6.			
7.			
8.			
9.			
10.			
11.			
12.			
13.			
14.			
	110%	= Total Cover	

Woody Vine Stratum (Plot size: **30'R**)			
1. **-**			
2.			
3.			
4.			
	0%	= Total Cover	

Dominance Test Worksheet:

Number of Dominant Species That Are OBL, FACW, or FAC: **5** (A)

Total Number of Dominant Species Across All Strata: **5** (B)

Percent of Dominant Species That Are OBL, FACW, or FAC: **100%** (A/B)

Prevalence Index Worksheet:

Total % Cover of:		Multiply by:	
OBL species		x 1 =	
FACW species		x 2 =	
FAC species		x 3 =	
FACU species		x 4 =	
UPL species		x 5 =	
Column Totals:	(A)		(B)

Prevalence Index B/A =

Hydrophytic Vegetation Indicators:

- Rapid Test for Hydrophitic Vegetation
- **X** Dominance Test is >50%
- Prevalence Index is ≤ 3.0[1]
- Morphological Adaptations[1] (Provide supporting data in Remarks or on separate sheet)
- Problematic Hydrophytic Vegetation[1] (Explain)

[1] Indicators of hydric soil and wetland hydrology must be present, unless disturbed or problematic.

Hydrophytic Vegetation Present? Yes **X** No

Remarks: **This is a fresh (wet) meadow on the stream terrace of the unnamed tributary of Jerome Creek. The hydrophytic vegetation criterion is met.**

SOIL Sampling Point: **DP-21 (wtd)**

Profile Description: (Describe to the depth needed to document the indicator or confirm the absence of indicators.)

Depth	Matrix		Redox Features					
(inches)	Color (moist)	%	Color (moist)	%	Type[1]	Loc[2]	Texture	Remarks
0-22	10YR 2/1	100	-	-			silt loam	
22-24	10YR 5/2	90	10YR 5/6	10	C	M	silty clay loam	

[1] Type: C=Concentration, D=Depletion, RM=Reduced Matrix, CS=Covered or Coated Sand Grains. [2] Location: PL=Pore Lining, M=Matrix

Hydric Soil Indicators:

- ___ Histosol (A1)
- ___ Histic Epipedon (A2)
- ___ Black Histic (A3)
- ___ Hydrogen Sulfide (A4)
- ___ Stratified Layers (A5)
- ___ 2 cm Much (A10)
- X Depleted Below Dark Surface (A11)
- ___ Thick Dark Surface (A12)
- ___ Sandy Mucky Mineral (S1)
- ___ Sandy Gleyed Matrix (S4)
- ___ Sandy Redox (S5)
- ___ Stripped Matrix (S6)
- ___ Loamy Mucky Mineral (F1)
- ___ Loamy Gleyed Matrix (F2)
- ___ Depleted Matrix (F3)
- ___ Redox Dark Surface (F6)
- ___ Depleted Dark Surface (F7)
- ___ Redox Depressions (F8)

Indicators for Problematic Hydric Soils[3]:

- ___ Coast Prairie Redox (A16) **(LRR,K,L,R)**
- ___ Dark Surface (S7) **(LRR,K,L)**
- ___ 5 cm mucky peat or peat (S3) **(LRR,K,L)**
- ___ Iron-Manganese Masses (F12) **(LRR,K,L,R)**
- ___ Very Shallow Dark Surface (TF12)
- ___ Other (Explain in Remarks)

[3] Indicators of hydrophytic evegetation and wetland hydrology must be present, unless disturbed or problematic.

Restrictive Layer (if observed):

Type: **n/a**

Depth (inches): **n/a**

Hydric Soil Present? Yes **X** No ___

Remarks: **The hydric soil criterion is met.**

HYDROLOGY

Wetland Hydrology Indicators:

Primary Indicators (minimum of one is required; check all that apply)

- ___ Surface Water (A1)
- ___ High Water Table (A2)
- ___ Saturation (A3)
- ___ Water Marks (B1)
- ___ Sediment Deposits (B2)
- ___ Drift Deposits (B3)
- ___ Algal Mat or Crust (B4)
- ___ Iron Deposits (B5)
- ___ Inundation Visible on Aerial Imagery (B7)
- ___ Sparsely Vegetated Concave Surface (B8)
- ___ Water-Stained Leaves (B9)
- ___ Aquatic Fauna (B13)
- ___ True Aquatic Plants (B14)
- ___ Hydrogen Sulfide Odor (C1)
- ___ Oxidized Rhizospheres on Living Roots (C3)
- ___ Presence of Reduced Iron (C4)
- ___ Recent Iron Reduction in Tilled Soils (C6)
- ___ Thin Muck Surface (C7)
- ___ Gauge or Well Data (D9)
- ___ Other (Explain in Remarks)

Secondary Indicators (minimum of two required)

- ___ Surface Soil Cracks (B6)
- X Drainage Patterns (B10)
- X Dry-Season Water Table (C2)
- X Crayfish Burrows (C8)
- ___ Saturation Visible on Aerial Imagery (C9)
- ___ Stunted or Stressed Plants (D1)
- X Geomorphic Position (D2)
- X FAC-Neutral Test (D5)

Field Observations:

Surface Water Present?	Yes ___	No **X**	Depth (inches):	
Water Table Present?	Yes **X**	No ___	Depth (inches):	**19**
Saturation Present? (includes capillary fringe)	Yes **X**	No ___	Depth (inches):	**6**

Wetland Hydrology Present? Yes **X** No ___

Describe Recorded Data (stream gauge, monitoring well, aerial photos, previous inspections), if available:

Local WETS table, NOAA's AHPS map, NRCS Soils Map, recent aerial photos

Remarks: **The water table is present at 19" with saturation at 6". Multiple secondary hydrology indicators are present as well.**

WETLAND DETERMINATION DATA FORM - Midwest Region

Project/Site: **Creekside Crossing** City/County: **Pleasant Prairie / Kenosha** Sampling Date: **Oct 23rd, 2014**

Applicant/Owner: **Bear Development, LLC** State: **WI** Sampling Point: **DP-22 (upl)**

Investigator(s): **Heather Patti, Mike Al-wathiqui** Section, Township, Range: **SW 1/4 Sec 15, T1N R22E**

Landform (hillslope, terrace, etc.): **backslope** Local relief (concave, convex, none): **slightly convex**

Slope (%): **5%** Lat: Long: Datum:

Soil Map Unit Name: **Hebron loam (HeB2), 2-6% slopes, eroded, non-hydric** WWI Classification: **none**

Are climatic / hydrologic conditions on the site typical for this time of year? Yes **X** No (if no, explain in Remarks)

Are Vegetation **Y*** Soil **N** or Hydrology **N** significantly disturbed? Are "Normal Circumstances" present? Yes **X** No

Are Vegetation **N** Soil **N** or Hydrology **N** naturally problematic? (if needed, explain any answers in Remarks)

SUMMARY OF FINDINGS --- Attach site map showing sampling point locations, transects, important features, etc.

Hydrophytic Vegetation Present?	Yes **X**	No	Is the Sampled Area		
Hydric Soil Present?	Yes	No **X**	within a Wetland?	Yes	No **X**
Wetland Hydrology Present?	Yes	No **X**	If yes, optional wetland site ID:		

Remarks: ***This is an old field which is occasionally mowed. There is some reed canary grass growing upslope. The hydrophytic vegetation criterion is met, but the soils and lack of hydrology indicate that this is an upland.**

VEGETATION - Use scientific names for plants.

Sampling Point: **DP-22 (upl)**

Tree Stratum (Plot size: **30'R**)	Absolute % Cover	Dominant Species	Indicator Status
1. **-**			
2.			
3.			
4.			
5.			
6.			
7.			
	0%	= Total Cover	

Sapling/Shrub Stratum (Plot size: **15'R**)			
1. **-**			
2.			
3.			
4.			
5.			
6.			
7.			
	0%	= Total Cover	

Herb Stratum (Plot size: **5'R**)			
1. ***Poa pratensis***	**60%**	**Y**	**FAC**
2. ***Phalaris arundinacea***	**30%**	**Y**	**FACW**
3. ***Dipsacus fullonum***	**30%**	**Y**	**FACU**
4. ***Medicago sativa***	**5%**	**N**	**FACU**
5.			
6.			
7.			
8.			
9.			
10.			
11.			
12.			
13.			
14.			
	125%	= Total Cover	

Woody Vine Stratum (Plot size: **30'R**)			
1. **-**			
2.			
3.			
4.			
	0%	= Total Cover	

Dominance Test Worksheet:

Number of Dominant Species That Are OBL, FACW, or FAC: **2** (A)

Total Number of Dominant Species Across All Strata: **3** (B)

Percent of Dominant Species That Are OBL, FACW, or FAC: **67%** (A/B)

Prevalence Index Worksheet:

Total % Cover of:		Multiply by:	
OBL species		x 1 =	
FACW species		x 2 =	
FAC species		x 3 =	
FACU species		x 4 =	
UPL species		x 5 =	
Column Totals:	(A)		(B)

Prevalence Index B/A =

Hydrophytic Vegetation Indicators:

- Rapid Test for Hydrophitic Vegetation
- **X** Dominance Test is >50%
- Prevalence Index is ≤ 3.0[1]
- Morphological Adaptations[1] (Provide supporting data in Remarks or on separate sheet)
- Problematic Hydrophytic Vegetation[1] (Explain)

[1] Indicators of hydric soil and wetland hydrology must be present, unless disturbed or problematic.

Hydrophytic Vegetation Present? Yes **X** No

Remarks: **This is an old field with reed canary grass gowing uplsope. The hydrophytic vegetation criterion is met, but the soils and lack of hydrology indicate that this is an upland.**

SOIL Sampling Point: **DP-22 (upl)**

Profile Description: (Describe to the depth needed to document the indicator or confirm the absence of indicators.)

Depth (inches)	Matrix Color (moist)	%	Redox Features Color (moist)	%	Type[1]	Loc[2]	Texture	Remarks
0-16	**10YR 3/1**	**100**	**-**	**-**			**silty clay loam**	
16-20+	**10YR 4/3**	**80**	**10YR 5/6**	**20**	**C**	**M**	**silty clay**	

[1] Type: C=Concentration, D=Depletion, RM=Reduced Matrix, CS=Covered or Coated Sand Grains. [2] Location: PL=Pore Lining, M=Matrix

Hydric Soil Indicators:

- ___ Histosol (A1)
- ___ Histic Epipedon (A2)
- ___ Black Histic (A3)
- ___ Hydrogen Sulfide (A4)
- ___ Stratified Layers (A5)
- ___ 2 cm Much (A10)
- ___ Depleted Below Dark Surface (A11)
- ___ Thick Dark Surface (A12)
- ___ Sandy Mucky Mineral (S1)
- ___ Sandy Gleyed Matrix (S4)
- ___ Sandy Redox (S5)
- ___ Stripped Matrix (S6)
- ___ Loamy Mucky Mineral (F1)
- ___ Loamy Gleyed Matrix (F2)
- ___ Depleted Matrix (F3)
- ___ Redox Dark Surface (F6)
- ___ Depleted Dark Surface (F7)
- ___ Redox Depressions (F8)

Indicators for Problematic Hydric Soils[3]:

- ___ Coast Prairie Redox (A16) **(LRR,K,L,R)**
- ___ Dark Surface (S7) **(LRR,K,L)**
- ___ 5 cm mucky peat or peat (S3) **(LRR,K,L)**
- ___ Iron-Manganese Masses (F12) **(LRR,K,L,R)**
- ___ Very Shallow Dark Surface (TF12)
- ___ Other (Explain in Remarks)

[3] Indicators of hydrophytic evegetation and wetland hydrology must be present, unless disturbed or problematic.

Restrictive Layer (if observed):

Type: **n/a**

Depth (inches): **n/a**

Hydric Soil Present? **Yes** ___ **No** **X**

Remarks: **The hydric soil criterion is not met.**

HYDROLOGY

Wetland Hydrology Indicators:

Primary Indicators (minimum of one is required; check all that apply)

- ___ Surface Water (A1)
- ___ High Water Table (A2)
- ___ Saturation (A3)
- ___ Water Marks (B1)
- ___ Sediment Deposits (B2)
- ___ Drift Deposits (B3)
- ___ Algal Mat or Crust (B4)
- ___ Iron Deposits (B5)
- ___ Inundation Visible on Aerial Imagery (B7)
- ___ Sparsely Vegetated Concave Surface (B8)
- ___ Water-Stained Leaves (B9)
- ___ Aquatic Fauna (B13)
- ___ True Aquatic Plants (B14)
- ___ Hydrogen Sulfide Odor (C1)
- ___ Oxidized Rhizospheres on Living Roots (C3)
- ___ Presence of Reduced Iron (C4)
- ___ Recent Iron Reduction in Tilled Soils (C6)
- ___ Thin Muck Surface (C7)
- ___ Gauge or Well Data (D9)
- ___ Other (Explain in Remarks)

Secondary Indicators (minimum of two required)

- ___ Surface Soil Cracks (B6)
- ___ Drainage Patterns (B10)
- ___ Dry-Season Water Table (C2)
- ___ Crayfish Burrows (C8)
- ___ Saturation Visible on Aerial Imagery (C9)
- ___ Stunted or Stressed Plants (D1)
- ___ Geomorphic Position (D2)
- ___ FAC-Neutral Test (D5)

Field Observations:

Surface Water Present? Yes ___ No **X** Depth (inches): ___

Water Table Present? Yes ___ No **X** Depth (inches): ___

Saturation Present? (includes capillary fringe) Yes ___ No **X** Depth (inches): ___

Wetland Hydrology Present? **Yes** ___ **No** **X**

Describe Recorded Data (stream gauge, monitoring well, aerial photos, previous inspections), if available:

Local WETS table, NOAA's AHPS map, NRCS Soils Map, recent aerial photos

Remarks: **There is no hydrology in this area. The criterion is not met.**

WETLAND DETERMINATION DATA FORM - Midwest Region

Project/Site: **Creekside Crossing** City/County: **Pleasant Prairie / Kenosha** Sampling Date: **Oct 23rd, 2014**

Applicant/Owner: **Bear Development, LLC** State: **WI** Sampling Point: **DP-23 (wtd)**

Investigator(s): **Heather Patti, Mike Al-wathqiui** Section, Township, Range: **SW 1/4 Sec 15, T1N R22E**

Landform (hillslope, terrace, etc.): **wetland depression** Local relief (concave, convex, none): **slightly concave**

Slope (%): **-** Lat: Long: Datum:

Soil Map Unit Name: **Hebron loam (HeB2), 2-6% slopes, eroded, non-hydric** WWI Classification: **T3/E2K**

Are climatic / hydrologic conditions on the site typical for this time of year? Yes **X** No (if no, explain in Remarks)

Are Vegetation **N** Soil **N** or Hydrology **N** significantly disturbed? Are "Normal Circumstances" present? Yes **X** No

Are Vegetation **N** Soil **N** or Hydrology **Y*** naturally problematic? (if needed, explain any answers in Remarks)

SUMMARY OF FINDINGS --- Attach site map showing sampling point locations, transects, important features, etc.

Hydrophytic Vegetation Present?	Yes **X**	No	Is the Sampled Area		
Hydric Soil Present?	Yes **X**	No	within a Wetland?	Yes **X**	No
Wetland Hydrology Present?	Yes **X**	No	If yes, optional wetland site ID:	**W-6**	

Remarks: **This is a fresh (wet) meadow that grades into a shallow marsh to the north. *This is a depressional area that recieves seasonal hydrology, thus making it naturally problematic. All three of the criteria are met.**

VEGETATION - Use scientific names for plants.

Sampling Point: **DP-23 (wtd)**

Tree Stratum (Plot size: **30'R**)	Absolute % Cover	Dominant Species	Indicator Status
1. ***Fraxinus pennsylvanica***	**10%**	**Y**	**FACW**
2.			
3.			
4.			
5.			
6.			
7.			
	10% = Total Cover		

Sapling/Shrub Stratum (Plot size: **15'R**)			
1. ***Rhamnus cathartica***	**20%**	**Y**	**FAC**
2. ***Cornus alba***	**5%**	**N**	**FACW**
3.			
4.			
5.			
6.			
7.			
	25% = Total Cover		

Herb Stratum (Plot size: **5'R**)			
1. ***Phalaris arundinacea***	**100%**	**Y**	**FACW**
2. ***Fraxinus pennsylvanica***	**10%**	**N**	**FACW**
3. ***Dipsacus fullonum***	**10%**	**N**	**FACU**
4.			
5.			
6.			
7.			
8.			
9.			
10.			
11.			
12.			
13.			
14.			
	120% = Total Cover		

Woody Vine Stratum (Plot size: **30'R)**)			
1. **-**			
2.			
3.			
4.			
	0% = Total Cover		

Dominance Test Worksheet:

Number of Dominant Species That Are OBL, FACW, or FAC: **3** (A)

Total Number of Dominant Species Across All Strata: **3** (B)

Percent of Dominant Species That Are OBL, FACW, or FAC: **100%** (A/B)

Prevalence Index Worksheet:

Total % Cover of:		Multiply by:	
OBL species		x 1 =	
FACW species		x 2 =	
FAC species		x 3 =	
FACU species		x 4 =	
UPL species		x 5 =	
Column Totals:	(A)		(B)

Prevalence Index B/A =

Hydrophytic Vegetation Indicators:

- Rapid Test for Hydrophitic Vegetation
- **X** Dominance Test is >50%
- Prevalence Index is ≤ 3.0[1]
- Morphological Adaptations[1] (Provide supporting data in Remarks or on separate sheet)
- Problematic Hydrophytic Vegetation[1] (Explain)

[1] Indicators of hydric soil and wetland hydrology must be present, unless disturbed or problematic.

Hydrophytic Vegetation Present? Yes **X** No

Remarks: **This is a fresh (wet) meadow. The hydrophytic vegetation criterion is met.**

SOIL Sampling Point: **DP-23 (wtd)**

Profile Description: (Describe to the depth needed to document the indicator or confirm the absence of indicators.)

Depth	Matrix		Redox Features					
(inches)	Color (moist)	%	Color (moist)	%	Type[1]	Loc[2]	Texture	Remarks
0-18	**10YR 2/1**	**100**	**-**	**-**			**silt loam**	
18-20+	**10YR 5/2**	**80**	**10YR 5/6**	**20**	**C**	**M**	**silty clay loam**	

[1] Type: C=Concentration, D=Depletion, RM=Reduced Matrix, CS=Covered or Coated Sand Grains. [2] Location: PL=Pore Lining, M=Matrix

Hydric Soil Indicators:

- ___ Histosol (A1)
- ___ Histic Epipedon (A2)
- ___ Black Histic (A3)
- ___ Hydrogen Sulfide (A4)
- ___ Stratified Layers (A5)
- ___ 2 cm Much (A10)
- ___ Depleted Below Dark Surface (A11)
- X Thick Dark Surface (A12)
- ___ Sandy Mucky Mineral (S1)
- ___ Sandy Gleyed Matrix (S4)
- ___ Sandy Redox (S5)
- ___ Stripped Matrix (S6)
- ___ Loamy Mucky Mineral (F1)
- ___ Loamy Gleyed Matrix (F2)
- ___ Depleted Matrix (F3)
- ___ Redox Dark Surface (F6)
- ___ Depleted Dark Surface (F7)
- ___ Redox Depressions (F8)

Indicators for Problematic Hydric Soils[3]:

- ___ Coast Prairie Redox (A16) **(LRR,K,L,R)**
- ___ Dark Surface (S7) **(LRR,K,L)**
- ___ 5 cm mucky peat or peat (S3) **(LRR,K,L)**
- ___ Iron-Manganese Masses (F12) **(LRR,K,L,R)**
- ___ Very Shallow Dark Surface (TF12)
- ___ Other (Explain in Remarks)

[3] Indicators of hydrophytic evegetation and wetland hydrology must be present, unless disturbed or problematic.

Restrictive Layer (if observed):

Type: **n/a**

Depth (inches): **n/a**

Hydric Soil Present? **Yes** X **No** ___

Remarks: **The hydric soil criterion is met.**

HYDROLOGY

Wetland Hydrology Indicators:

Primary Indicators (minimum of one is required; check all that apply)

- ___ Surface Water (A1)
- ___ High Water Table (A2)
- ___ Saturation (A3)
- ___ Water Marks (B1)
- ___ Sediment Deposits (B2)
- ___ Drift Deposits (B3)
- ___ Algal Mat or Crust (B4)
- ___ Iron Deposits (B5)
- ___ Inundation Visible on Aerial Imagery (B7)
- ___ Sparsely Vegetated Concave Surface (B8)
- ___ Water-Stained Leaves (B9)
- X Aquatic Fauna (B13)
- ___ True Aquatic Plants (B14)
- ___ Hydrogen Sulfide Odor (C1)
- ___ Oxidized Rhizospheres on Living Roots (C3)
- ___ Presence of Reduced Iron (C4)
- ___ Recent Iron Reduction in Tilled Soils (C6)
- ___ Thin Muck Surface (C7)
- ___ Gauge or Well Data (D9)
- ___ Other (Explain in Remarks)

Secondary Indicators (minimum of two required)

- ___ Surface Soil Cracks (B6)
- ___ Drainage Patterns (B10)
- ___ Dry-Season Water Table (C2)
- X Crayfish Burrows (C8)
- ___ Saturation Visible on Aerial Imagery (C9)
- ___ Stunted or Stressed Plants (D1)
- X Geomorphic Position (D2)
- X FAC-Neutral Test (D5)

Field Observations:

Surface Water Present?	Yes ___	No X	Depth (inches): ___
Water Table Present?	Yes ___	No X	Depth (inches): ___
Saturation Present? (includes capillary fringe)	Yes ___	No X	Depth (inches): ___

Wetland Hydrology Present? **Yes** X **No** ___

Describe Recorded Data (stream gauge, monitoring well, aerial photos, previous inspections), if available:

Local WETS table, NOAA's AHPS map, NRCS Soils Map, recent aerial photos

Remarks: **Frogs are present in this area as well as multiple secondary hydrology indicators. The criterion is met.**

WETLAND DETERMINATION DATA FORM - Midwest Region

Project/Site: **Creekside Crossing** City/County: **Pleasant Prairie / Kenosha** Sampling Date: **Oct 23rd, 2014**

Applicant/Owner: **Bear Development, LLC** State: **WI** Sampling Point: **DP-24 (upl)**

Investigator(s): **Heather Patti, Mike Al-wathqiui** Section, Township, Range: **SW 1/4 Sec 15, T1N R22E**

Landform (hillslope, terrace, etc.): **backslope** Local relief (concave, convex, none): **convex**

Slope (%): **25%** Lat: Long: Datum:

Soil Map Unit Name: **Aztalan loam (AzA), 0-2% slopes, hydric via inclusions** WWI Classification: **none**

Are climatic / hydrologic conditions on the site typical for this time of year? Yes **X** No (if no, explain in Remarks)

Are Vegetation **N** Soil **N** or Hydrology **N** significantly disturbed? Are "Normal Circumstances" present? Yes **X** No

Are Vegetation **N** Soil **N** or Hydrology **N** naturally problematic? (if needed, explain any answers in Remarks)

SUMMARY OF FINDINGS --- Attach site map showing sampling point locations, transects, important features, etc.

Hydrophytic Vegetation Present?	Yes		No	**X**	Is the Sampled Area
Hydric Soil Present?	Yes		No	**X**	within a Wetland? Yes No **X**
Wetland Hydrology Present?	Yes		No	**X**	If yes, optional wetland site ID:

Remarks: **This is an old field on a man-made berm that was created during the 2005-2006 grading activities. None of the three criteria are met.**

VEGETATION - Use scientific names for plants.

Sampling Point: **DP-24 (upl)**

Tree Stratum (Plot size: **30'R**)	Absolute % Cover	Dominant Species	Indicator Status
1. **-**			
2.			
3.			
4.			
5.			
6.			
7.			
	0%	= Total Cover	

Sapling/Shrub Stratum (Plot size: **15'R**)			
1. **-**			
2.			
3.			
4.			
5.			
6.			
7.			
	0%	= Total Cover	

Herb Stratum (Plot size: **5'R**)			
1. ***Lotus corniculatus***	**50%**	**Y**	**FACU**
2. ***Poa pratensis***	**30%**	**Y**	**FAC**
3. ***Melilotus albus***	**20%**	**N**	**FACU**
4. ***Trifolium hybridum***	**20%**	**N**	**FACU**
5. ***Aster pilosus***	**15%**	**N**	**FACU**
6.			
7.			
8.			
9.			
10.			
11.			
12.			
13.			
14.			
	135%	= Total Cover	

Woody Vine Stratum (Plot size: **30'R**)			
1. **-**			
2.			
3.			
4.			
	0%	= Total Cover	

Dominance Test Worksheet:

Number of Dominant Species That Are OBL, FACW, or FAC: **1** (A)

Total Number of Dominant Species Across All Strata: **2** (B)

Percent of Dominant Species That Are OBL, FACW, or FAC: **50%** (A/B)

Prevalence Index Worksheet:

Total % Cover of:		Multiply by:	
OBL species	**0**	x 1 = **0**	
FACW species	**0**	x 2 = **0**	
FAC species	**30**	x 3 = **90**	
FACU species	**105**	x 4 = **420**	
UPL species	**0**	x 5 = **0**	
Column Totals:	**135** (A)	**510**	(B)

Prevalence Index B/A = **3.8**

Hydrophytic Vegetation Indicators:

- Rapid Test for Hydrophitic Vegetation
- Dominance Test is >50%
- Prevalence Index is ≤ 3.0[1]
- Morphological Adaptations[1] (Provide supporting data in Remarks or on separate sheet)
- Problematic Hydrophytic Vegetation[1] (Explain)

[1] Indicators of hydric soil and wetland hydrology must be present, unless disturbed or problematic.

Hydrophytic Vegetation Present? Yes No **X**

Remarks: **This is an old field on a man-made berm. The hydrophytic vegetation criterion is not met.**

SOIL Sampling Point: **DP-24 (upl)**

Profile Description: (Describe to the depth needed to document the indicator or confirm the absence of indicators.)

Depth	Matrix		Redox Features					
(inches)	Color (moist)	%	Color (moist)	%	Type[1]	Loc[2]	Texture	Remarks
0-4	7.5YR 4/3	100	-	-			silty clay	*small gravel fill is present
4-16+	7.5YR 4/3	50	10YR 5/6	10	C	M	silty clay	throughout the profile
	10YR 3/2	40						

[1] Type: C=Concentration, D=Depletion, RM=Reduced Matrix, CS=Covered or Coated Sand Grains. [2] Location: PL=Pore Lining, M=Matrix

Hydric Soil Indicators:

- ___ Histosol (A1)
- ___ Histic Epipedon (A2)
- ___ Black Histic (A3)
- ___ Hydrogen Sulfide (A4)
- ___ Stratified Layers (A5)
- ___ 2 cm Much (A10)
- ___ Depleted Below Dark Surface (A11)
- ___ Thick Dark Surface (A12)
- ___ Sandy Mucky Mineral (S1)
- ___ Sandy Gleyed Matrix (S4)
- ___ Sandy Redox (S5)
- ___ Stripped Matrix (S6)
- ___ Loamy Mucky Mineral (F1)
- ___ Loamy Gleyed Matrix (F2)
- ___ Depleted Matrix (F3)
- ___ Redox Dark Surface (F6)
- ___ Depleted Dark Surface (F7)
- ___ Redox Depressions (F8)

Indicators for Problematic Hydric Soils[3]:

- ___ Coast Prairie Redox (A16) **(LRR,K,L,R)**
- ___ Dark Surface (S7) **(LRR,K,L)**
- ___ 5 cm mucky peat or peat (S3) **(LRR,K,L)**
- ___ Iron-Manganese Masses (F12) **(LRR,K,L,R)**
- ___ Very Shallow Dark Surface (TF12)
- ___ Other (Explain in Remarks)

[3] Indicators of hydrophytic evegetation and wetland hydrology must be present, unless disturbed or problematic.

Restrictive Layer (if observed):

Type: **gravel fill**

Depth (inches): **16"**

Hydric Soil Present? **Yes** ___ **No** **X**

Remarks: **The soils are disturbed from grading that took place around 2005 - 2006. The hydric soil criterion is not met.**

HYDROLOGY

Wetland Hydrology Indicators:

Primary Indicators (minimum of one is required; check all that apply)

- ___ Surface Water (A1)
- ___ High Water Table (A2)
- ___ Saturation (A3)
- ___ Water Marks (B1)
- ___ Sediment Deposits (B2)
- ___ Drift Deposits (B3)
- ___ Algal Mat or Crust (B4)
- ___ Iron Deposits (B5)
- ___ Inundation Visible on Aerial Imagery (B7)
- ___ Sparsely Vegetated Concave Surface (B8)
- ___ Water-Stained Leaves (B9)
- ___ Aquatic Fauna (B13)
- ___ True Aquatic Plants (B14)
- ___ Hydrogen Sulfide Odor (C1)
- ___ Oxidized Rhizospheres on Living Roots (C3)
- ___ Presence of Reduced Iron (C4)
- ___ Recent Iron Reduction in Tilled Soils (C6)
- ___ Thin Muck Surface (C7)
- ___ Gauge or Well Data (D9)
- ___ Other (Explain in Remarks)

Secondary Indicators (minimum of two required)

- ___ Surface Soil Cracks (B6)
- ___ Drainage Patterns (B10)
- ___ Dry-Season Water Table (C2)
- ___ Crayfish Burrows (C8)
- ___ Saturation Visible on Aerial Imagery (C9)
- ___ Stunted or Stressed Plants (D1)
- ___ Geomorphic Position (D2)
- ___ FAC-Neutral Test (D5)

Field Observations:

Surface Water Present?	Yes ___	No **X**	Depth (inches): ___
Water Table Present?	Yes ___	No **X**	Depth (inches): ___
Saturation Present? (includes capillary fringe)	Yes ___	No **X**	Depth (inches): ___

Wetland Hydrology Present? **Yes** ___ **No** **X**

Describe Recorded Data (stream gauge, monitoring well, aerial photos, previous inspections), if available:

Local WETS table, NOAA's AHPS map, NRCS Soils Map, recent aerial photos

Remarks: **There is no hydrology in this area. The criterion is not met.**

WETLAND DETERMINATION DATA FORM - Midwest Region

Project/Site: **Creekside Crossing** City/County: **Pleasant Prairie / Kenosha** Sampling Date: **Oct 23rd, 2014**

Applicant/Owner: **Bear Development, LLC** State: **WI** Sampling Point: **DP-25 (wtd)**

Investigator(s): **Heather Patti, Mike Al-wathqiui** Section, Township, Range: **SW 1/4 Sec 15, T1N R22E**

Landform (hillslope, terrace, etc.): **wetland depression** Local relief (concave, convex, none): **concave**

Slope (%): **-** Lat: Long: Datum:

Soil Map Unit Name: **Aztalan loam (AzA), 0-2% slopes, hydric via inclusions** WWI Classification: **none**

Are climatic / hydrologic conditions on the site typical for this time of year? Yes **X** No (if no, explain in Remarks)

Are Vegetation **N** Soil **N** or Hydrology **N** significantly disturbed? Are "Normal Circumstances" present? Yes No **X**

Are Vegetation **N** Soil **N** or Hydrology **Y*** naturally problematic? (if needed, explain any answers in Remarks)

SUMMARY OF FINDINGS --- Attach site map showing sampling point locations, transects, important features, etc.

Hydrophytic Vegetation Present?	Yes **X**	No	Is the Sampled Area		
Hydric Soil Present?	Yes **X**	No	within a Wetland?	Yes **X**	No
Wetland Hydrology Present?	Yes **X**	No	If yes, optional wetland site ID:	**W-11**	

Remarks: **This is a degraded fresh (wet) meadow in a depression created during past grading activities. This is a depressional area with seasonal hydrology, thus making it naturally problematic.**

VEGETATION - Use scientific names for plants.

Sampling Point: **DP-25 (wtd)**

Tree Stratum (Plot size: **30'R**)	Absolute % Cover	Dominant Species	Indicator Status
1. -			
2.			
3.			
4.			
5.			
6.			
7.			
	0%	= Total Cover	

Sapling/Shrub Stratum (Plot size: **15'R**)			
1. -			
2.			
3.			
4.			
5.			
6.			
7.			
	0%	= Total Cover	

Herb Stratum (Plot size: **5'R**)			
1. ***Phalaris arundinacea***	**80%**	**Y**	**FACW**
2. ***Euthamia graminifolia***	**20%**	**N**	**FACW**
3. ***Lotus corniculatus***	**10%**	**N**	**FACU**
4.			
5.			
6.			
7.			
8.			
9.			
10.			
11.			
12.			
13.			
14.			
	110%	= Total Cover	

Woody Vine Stratum (Plot size: **30'R)**)			
1. -			
2.			
3.			
4.			
	0%	= Total Cover	

Dominance Test Worksheet:

Number of Dominant Species That Are OBL, FACW, or FAC: **1** (A)

Total Number of Dominant Species Across All Strata: **1** (B)

Percent of Dominant Species That Are OBL, FACW, or FAC: **100%** (A/B)

Prevalence Index Worksheet:

Total % Cover of:		Multiply by:	
OBL species		x 1 =	
FACW species		x 2 =	
FAC species		x 3 =	
FACU species		x 4 =	
UPL species		x 5 =	
Column Totals:	(A)		(B)

Prevalence Index B/A =

Hydrophytic Vegetation Indicators:

X Rapid Test for Hydrophitic Vegetation

Dominance Test is >50%

Prevalence Index is ≤ 3.0[1]

Morphological Adaptations[1] (Provide supporting data in Remarks or on separate sheet)

Problematic Hydrophytic Vegetation[1] (Explain)

[1] Indicators of hydric soil and wetland hydrology must be present, unless disturbed or problematic.

Hydrophytic Vegetation Present? **Yes X** **No**

Remarks: **This is a degraded fresh (wet) meadow. The hydrophytic vegetation criterion is met.**

SOIL Sampling Point: **DP-25 (wtd)**

Profile Description: (Describe to the depth needed to document the indicator or confirm the absence of indicators.)

Depth	Matrix		Redox Features					
(inches)	Color (moist)	%	Color (moist)	%	Type[1]	Loc[2]	Texture	Remarks
0-7*	7.5YR 4/3	80	10YR 5/6	10	C	M	silty clay	*small gravel is present throughout
	10YR 3/1	10	-	-				the profile

[1] Type: C=Concentration, D=Depletion, RM=Reduced Matrix, CS=Covered or Coated Sand Grains. [2] Location: PL=Pore Lining, M=Matrix

Hydric Soil Indicators:

- ___ Histosol (A1)
- ___ Histic Epipedon (A2)
- ___ Black Histic (A3)
- ___ Hydrogen Sulfide (A4)
- ___ Stratified Layers (A5)
- ___ 2 cm Much (A10)
- ___ Depleted Below Dark Surface (A11)
- ___ Thick Dark Surface (A12)
- ___ Sandy Mucky Mineral (S1)
- ___ Sandy Gleyed Matrix (S4)
- ___ Sandy Redox (S5)
- ___ Stripped Matrix (S6)
- ___ Loamy Mucky Mineral (F1)
- ___ Loamy Gleyed Matrix (F2)
- ___ Depleted Matrix (F3)
- ___ Redox Dark Surface (F6)
- ___ Depleted Dark Surface (F7)
- ___ Redox Depressions (F8)

Indicators for Problematic Hydric Soils[3]:

- ___ Coast Prairie Redox (A16) **(LRR,K,L,R)**
- ___ Dark Surface (S7) **(LRR,K,L)**
- ___ 5 cm mucky peat or peat (S3) **(LRR,K,L)**
- ___ Iron-Manganese Masses (F12) **(LRR,K,L,R)**
- ___ Very Shallow Dark Surface (TF12)
- ___ Other (Explain in Remarks)

[3] Indicators of hydrophytic evegetation and wetland hydrology must be present, unless disturbed or problematic.

Restrictive Layer (if observed):

Type: **gravel fill/heavy clay**

Depth (inches): **7**

Hydric Soil Present? **Yes** X **No** ___

Remarks: **Gravel fill prevents observation of the soil profile past 7". However redox has developed at the surface and it is in the best professional judgment of the delineator that the soils criterion is met.**

HYDROLOGY

Wetland Hydrology Indicators:

Primary Indicators (minimum of one is required; check all that apply)

- ___ Surface Water (A1)
- ___ High Water Table (A2)
- X Saturation (A3)
- ___ Water Marks (B1)
- ___ Sediment Deposits (B2)
- ___ Drift Deposits (B3)
- ___ Algal Mat or Crust (B4)
- ___ Iron Deposits (B5)
- ___ Inundation Visible on Aerial Imagery (B7)
- X Sparsely Vegetated Concave Surface (B8)
- ___ Water-Stained Leaves (B9)
- ___ Aquatic Fauna (B13)
- ___ True Aquatic Plants (B14)
- ___ Hydrogen Sulfide Odor (C1)
- ___ Oxidized Rhizospheres on Living Roots (C3)
- ___ Presence of Reduced Iron (C4)
- ___ Recent Iron Reduction in Tilled Soils (C6)
- ___ Thin Muck Surface (C7)
- ___ Gauge or Well Data (D9)
- ___ Other (Explain in Remarks)

Secondary Indicators (minimum of two required)

- ___ Surface Soil Cracks (B6)
- ___ Drainage Patterns (B10)
- ___ Dry-Season Water Table (C2)
- X Crayfish Burrows (C8)
- ___ Saturation Visible on Aerial Imagery (C9)
- ___ Stunted or Stressed Plants (D1)
- X Geomorphic Position (D2)
- X FAC-Neutral Test (D5)

Field Observations:

Surface Water Present?	Yes	___	No	X	Depth (inches): ___
Water Table Present?	Yes	X	No	___	Depth (inches): 2
Saturation Present? (includes capillary fringe)	Yes	X	No	___	Depth (inches): 0

Wetland Hydrology Present? **Yes** X **No** ___

Describe Recorded Data (stream gauge, monitoring well, aerial photos, previous inspections), if available:

Local WETS table, NOAA's AHPS map, NRCS Soils Map, recent aerial photos

Remarks: **The water table is present at 2" with saturation at the surface. Multiple secondary hydrology indicators are present as well. The criterion is met.**

WETLAND DETERMINATION DATA FORM - Midwest Region

Project/Site: **Creekside Crossing** City/County: **Pleasant Prairie / Kenosha** Sampling Date: **Oct 23rd, 2014**

Applicant/Owner: **Bear Development, LLC** State: **WI** Sampling Point: **DP-26 (upl)**

Investigator(s): **Heather Patti, Mike Al-wathqiui** Section, Township, Range: **SW 1/4 Sec 15, T1N R22E**

Landform (hillslope, terrace, etc.): **top of berm** Local relief (concave, convex, none): **none-flat**

Slope (%): **-** Lat: Long: Datum:

Soil Map Unit Name: **Morley silt loam (MzdB), 2-6% slopes, non-hydric** WWI Classification: **none**

Are climatic / hydrologic conditions on the site typical for this time of year? Yes **X** No (if no, explain in Remarks)

Are Vegetation **N** Soil **N** or Hydrology **N** significantly disturbed? Are "Normal Circumstances" present? Yes **X** No

Are Vegetation **N** Soil **N** or Hydrology **N** naturally problematic? (if needed, explain any answers in Remarks)

SUMMARY OF FINDINGS --- Attach site map showing sampling point locations, transects, important features, etc.

Hydrophytic Vegetation Present?	Yes **X**	No	Is the Sampled Area		
Hydric Soil Present?	Yes	No **X**	within a Wetland?	Yes	No **X**
Wetland Hydrology Present?	Yes	No **X**	If yes, optional wetland site ID:		

Remarks: **This area is about a foot above the creek bank. This is on the top of a small berm that was likely created during the grading that took place around 2005-2006. The hydrophytic vegetation criterion is met, but it is in the best professional judgment of the delineator that this is an upland based on the soil and lack of hydrology.**

VEGETATION - Use scientific names for plants.

Sampling Point: **DP-26 (upl)**

Tree Stratum (Plot size: **30'R**)	Absolute % Cover	Dominant Species	Indicator Status
1. **-**			
2.			
3.			
4.			
5.			
6.			
7.			
	0% = Total Cover		

Sapling/Shrub Stratum (Plot size: **15'R**)			
1. ***Salix interior***	**5%**	**Y**	**FACW**
2.			
3.			
4.			
5.			
6.			
7.			
	5% = Total Cover		

Herb Stratum (Plot size: **5'R**)			
1. ***Phalaris arundinacea***	**100%**	**Y**	**FACW**
2. ***Cirsium arvense***	**40%**	**Y**	**FACU**
3.			
4.			
5.			
6.			
7.			
8.			
9.			
10.			
11.			
12.			
13.			
14.			
	140% = Total Cover		

Woody Vine Stratum (Plot size: **30'R)**			
1. **-**			
2.			
3.			
4.			
	0% = Total Cover		

Dominance Test Worksheet:

Number of Dominant Species That Are OBL, FACW, or FAC: **2** (A)

Total Number of Dominant Species Across All Strata: **3** (B)

Percent of Dominant Species That Are OBL, FACW, or FAC: **67%** (A/B)

Prevalence Index Worksheet:

Total % Cover of:		Multiply by:	
OBL species		x 1 =	
FACW species		x 2 =	
FAC species		x 3 =	
FACU species		x 4 =	
UPL species		x 5 =	
Column Totals:	(A)		(B)

Prevalence Index B/A =

Hydrophytic Vegetation Indicators:

- Rapid Test for Hydrophitic Vegetation
- **X** Dominance Test is >50%
- Prevalence Index is ≤ 3.0[1]
- Morphological Adaptations[1] (Provide supporting data in Remarks or on separate sheet)
- Problematic Hydrophytic Vegetation[1] (Explain)

[1] Indicators of hydric soil and wetland hydrology must be present, unless disturbed or problematic.

Hydrophytic Vegetation Present? **Yes X** **No**

Remarks: **The hydrophytic vegetation criterion is met due to the reed canary grass and Salix interior growing upslope. The soils and lack of hydrology indicate that this area is upland, however.**

SOIL Sampling Point: **DP-26 (upl)**

Profile Description: (Describe to the depth needed to document the indicator or confirm the absence of indicators.)

Depth (inches)	Matrix Color (moist)	%	Redox Features Color (moist)	%	Type[1]	Loc[2]	Texture	Remarks
0-12	**10YR 3/3**	**100**	**-**	**-**			**silt loam**	
12-20+	**10YR 3/3**	**95**	**10YR 5/6**	**5**	**C**	**M**	**silt loam**	

[1] Type: C=Concentration, D=Depletion, RM=Reduced Matrix, CS=Covered or Coated Sand Grains. [2] Location: PL=Pore Lining, M=Matrix

Hydric Soil Indicators:

- ___ Histosol (A1)
- ___ Histic Epipedon (A2)
- ___ Black Histic (A3)
- ___ Hydrogen Sulfide (A4)
- ___ Stratified Layers (A5)
- ___ 2 cm Much (A10)
- ___ Depleted Below Dark Surface (A11)
- ___ Thick Dark Surface (A12)
- ___ Sandy Mucky Mineral (S1)
- ___ Sandy Gleyed Matrix (S4)
- ___ Sandy Redox (S5)
- ___ Stripped Matrix (S6)
- ___ Loamy Mucky Mineral (F1)
- ___ Loamy Gleyed Matrix (F2)
- ___ Depleted Matrix (F3)
- ___ Redox Dark Surface (F6)
- ___ Depleted Dark Surface (F7)
- ___ Redox Depressions (F8)

Indicators for Problematic Hydric Soils[3]:

- ___ Coast Prairie Redox (A16) **(LRR,K,L,R)**
- ___ Dark Surface (S7) **(LRR,K,L)**
- ___ 5 cm mucky peat or peat (S3) **(LRR,K,L)**
- ___ Iron-Manganese Masses (F12) **(LRR,K,L,R)**
- ___ Very Shallow Dark Surface (TF12)
- ___ Other (Explain in Remarks)

[3] Indicators of hydrophytic evegetation and wetland hydrology must be present, unless disturbed or problematic.

Restrictive Layer (if observed):

Type: **n/a**

Depth (inches): **n/a**

Hydric Soil Present? **Yes** ___ **No** **X**

Remarks: **The hydric soil criterion is not met.**

HYDROLOGY

Wetland Hydrology Indicators:

Primary Indicators (minimum of one is required; check all that apply)

- ___ Surface Water (A1)
- ___ High Water Table (A2)
- ___ Saturation (A3)
- ___ Water Marks (B1)
- ___ Sediment Deposits (B2)
- ___ Drift Deposits (B3)
- ___ Algal Mat or Crust (B4)
- ___ Iron Deposits (B5)
- ___ Inundation Visible on Aerial Imagery (B7)
- ___ Sparsely Vegetated Concave Surface (B8)
- ___ Water-Stained Leaves (B9)
- ___ Aquatic Fauna (B13)
- ___ True Aquatic Plants (B14)
- ___ Hydrogen Sulfide Odor (C1)
- ___ Oxidized Rhizospheres on Living Roots (C3)
- ___ Presence of Reduced Iron (C4)
- ___ Recent Iron Reduction in Tilled Soils (C6)
- ___ Thin Muck Surface (C7)
- ___ Gauge or Well Data (D9)
- ___ Other (Explain in Remarks)

Secondary Indicators (minimum of two required)

- ___ Surface Soil Cracks (B6)
- ___ Drainage Patterns (B10)
- ___ Dry-Season Water Table (C2)
- ___ Crayfish Burrows (C8)
- ___ Saturation Visible on Aerial Imagery (C9)
- ___ Stunted or Stressed Plants (D1)
- ___ Geomorphic Position (D2)
- ___ FAC-Neutral Test (D5)

Field Observations:

Surface Water Present? Yes ___ No **X** Depth (inches): ___

Water Table Present? Yes ___ No **X** Depth (inches): ___

Saturation Present? (includes capillary fringe) Yes ___ No **X** Depth (inches): ___

Wetland Hydrology Present? **Yes** ___ **No** **X**

Describe Recorded Data (stream gauge, monitoring well, aerial photos, previous inspections), if available:

Local WETS table, NOAA's AHPS map, NRCS Soils Map, recent aerial photos

Remarks: **There is no hydrology in this area. The criterion is not met.**

WETLAND DETERMINATION DATA FORM - Midwest Region

Project/Site: **Creekside Crossing** City/County: **Pleasant Prairie / Kenosha** Sampling Date: **Oct 23rd, 2014**

Applicant/Owner: **Bear Development, LLC** State: **WI** Sampling Point: **DP-27 (upl)**

Investigator(s): **Heather Patti, Mike Al-wathqiui** Section, Township, Range: **SW 1/4 Sec 15, T1N R22E**

Landform (hillslope, terrace, etc.): **backslope** Local relief (concave, convex, none): **convex**

Slope (%): **5%** Lat: Long: Datum:

Soil Map Unit Name: **Beecher silt loam (BcA), 1-3% slopes, hydric via inclusions** WWI Classification: **none**

Are climatic / hydrologic conditions on the site typical for this time of year? Yes **X** No (if no, explain in Remarks)

Are Vegetation **Y*** Soil **N** or Hydrology **N** significantly disturbed? Are "Normal Circumstances" present? Yes **X** No

Are Vegetation **N** Soil **N** or Hydrology **N** naturally problematic? (if needed, explain any answers in Remarks)

SUMMARY OF FINDINGS --- Attach site map showing sampling point locations, transects, important features, etc.

Hydrophytic Vegetation Present?	Yes **X**	No	Is the Sampled Area		
Hydric Soil Present?	Yes	No **X**	within a Wetland?	Yes	No **X**
Wetland Hydrology Present?	Yes	No **X**	If yes, optional wetland site ID:		

Remarks: ***This is an old field that gets occasionally mowed. The hydrophytic vegetation criterion is met due to a dominance of Kentucky blue grass, but the soils and lack of hydrology indicate that this is an upland area.**

VEGETATION - Use scientific names for plants.

Sampling Point: **DP-27 (upl)**

Tree Stratum (Plot size: **30'R**)	Absolute % Cover	Dominant Species	Indicator Status
1. **-**			
2.			
3.			
4.			
5.			
6.			
7.			
	0%	= Total Cover	

Sapling/Shrub Stratum (Plot size: **15'R**)			
1. **-**			
2.			
3.			
4.			
5.			
6.			
7.			
	0%	= Total Cover	

Herb Stratum (Plot size: **5'R**)			
1. ***Poa pratensis***	**95%**	**Y**	**FAC**
2. ***Phalaris arundinacea***	**10%**	**N**	**FACW**
3. ***Taraxacum officinale***	**10%**	**N**	**FACU**
4. ***Lotus corniculatus***	**10%**	**N**	**FACU**
5.			
6.			
7.			
8.			
9.			
10.			
11.			
12.			
13.			
14.			
	125%	= Total Cover	

Woody Vine Stratum (Plot size: **30'R)**)			
1. **-**			
2.			
3.			
4.			
	0%	= Total Cover	

Dominance Test Worksheet:

Number of Dominant Species That Are OBL, FACW, or FAC: **1** (A)

Total Number of Dominant Species Across All Strata: **1** (B)

Percent of Dominant Species That Are OBL, FACW, or FAC: **100%** (A/B)

Prevalence Index Worksheet:

Total % Cover of:		Multiply by:	
OBL species		x 1 =	
FACW species		x 2 =	
FAC species		x 3 =	
FACU species		x 4 =	
UPL species		x 5 =	
Column Totals:	(A)		(B)

Prevalence Index B/A =

Hydrophytic Vegetation Indicators:

- Rapid Test for Hydrophitic Vegetation
- **X** Dominance Test is >50%
- Prevalence Index is ≤ 3.0[1]
- Morphological Adaptations[1] (Provide supporting data in Remarks or on separate sheet)
- Problematic Hydrophytic Vegetation[1] (Explain)

[1] Indicators of hydric soil and wetland hydrology must be present, unless disturbed or problematic.

Hydrophytic Vegetation Present? Yes **X** No

Remarks: **This is an old field, but the hydrophytic vegetation criterion is met due to a dominance of Kentucky blue grass.**

SOIL Sampling Point: **DP-27 (upl)**

Profile Description: (Describe to the depth needed to document the indicator or confirm the absence of indicators.)

Depth (inches)	Matrix Color (moist)	%	Redox Features Color (moist)	%	Type[1]	Loc[2]	Texture	Remarks
0-12	**10YR 3/2**	**100**	**-**	**-**			**silty clay loam**	
12-20+	**10YR 5/2**	**85**	**10YR 5/6**	**15**	**C**	**M**	**silty clay**	

[1] Type: C=Concentration, D=Depletion, RM=Reduced Matrix, CS=Covered or Coated Sand Grains. [2] Location: PL=Pore Lining, M=Matrix

Hydric Soil Indicators:

- ___ Histosol (A1)
- ___ Histic Epipedon (A2)
- ___ Black Histic (A3)
- ___ Hydrogen Sulfide (A4)
- ___ Stratified Layers (A5)
- ___ 2 cm Much (A10)
- ___ Depleted Below Dark Surface (A11)
- ___ Thick Dark Surface (A12)
- ___ Sandy Mucky Mineral (S1)
- ___ Sandy Gleyed Matrix (S4)
- ___ Sandy Redox (S5)
- ___ Stripped Matrix (S6)
- ___ Loamy Mucky Mineral (F1)
- ___ Loamy Gleyed Matrix (F2)
- ___ Depleted Matrix (F3)
- ___ Redox Dark Surface (F6)
- ___ Depleted Dark Surface (F7)
- ___ Redox Depressions (F8)

Indicators for Problematic Hydric Soils[3]:

- ___ Coast Prairie Redox (A16) **(LRR,K,L,R)**
- ___ Dark Surface (S7) **(LRR,K,L)**
- ___ 5 cm mucky peat or peat (S3) **(LRR,K,L)**
- ___ Iron-Manganese Masses (F12) **(LRR,K,L,R)**
- ___ Very Shallow Dark Surface (TF12)
- ___ Other (Explain in Remarks)

[3] Indicators of hydrophytic evegetation and wetland hydrology must be present, unless disturbed or problematic.

Restrictive Layer (if observed):

Type: **n/a**

Depth (inches): **n/a**

Hydric Soil Present? **Yes** ___ **No** **X**

Remarks: **The hydric soil criterion is not met.**

HYDROLOGY

Wetland Hydrology Indicators:

Primary Indicators (minimum of one is required; check all that apply)

- ___ Surface Water (A1)
- ___ High Water Table (A2)
- ___ Saturation (A3)
- ___ Water Marks (B1)
- ___ Sediment Deposits (B2)
- ___ Drift Deposits (B3)
- ___ Algal Mat or Crust (B4)
- ___ Iron Deposits (B5)
- ___ Inundation Visible on Aerial Imagery (B7)
- ___ Sparsely Vegetated Concave Surface (B8)
- ___ Water-Stained Leaves (B9)
- ___ Aquatic Fauna (B13)
- ___ True Aquatic Plants (B14)
- ___ Hydrogen Sulfide Odor (C1)
- ___ Oxidized Rhizospheres on Living Roots (C3)
- ___ Presence of Reduced Iron (C4)
- ___ Recent Iron Reduction in Tilled Soils (C6)
- ___ Thin Muck Surface (C7)
- ___ Gauge or Well Data (D9)
- ___ Other (Explain in Remarks)

Secondary Indicators (minimum of two required)

- ___ Surface Soil Cracks (B6)
- ___ Drainage Patterns (B10)
- ___ Dry-Season Water Table (C2)
- ___ Crayfish Burrows (C8)
- ___ Saturation Visible on Aerial Imagery (C9)
- ___ Stunted or Stressed Plants (D1)
- ___ Geomorphic Position (D2)
- ___ FAC-Neutral Test (D5)

Field Observations:

Surface Water Present? Yes ___ No **X** Depth (inches): ___

Water Table Present? Yes ___ No **X** Depth (inches): ___

Saturation Present? (includes capillary fringe) Yes ___ No **X** Depth (inches): ___

Wetland Hydrology Present? **Yes** ___ **No** **X**

Describe Recorded Data (stream gauge, monitoring well, aerial photos, previous inspections), if available:

Local WETS table, NOAA's AHPS map, NRCS Soils Map, recent aerial photos

Remarks: **There is no hydrology in this area. The criterion is not met.**

WETLAND DETERMINATION DATA FORM - Midwest Region

Project/Site: **Creekside Crossing** City/County: **Pleasant Prairie / Kenosha** Sampling Date: **Oct 23rd, 2014**

Applicant/Owner: **Bear Development, LLC** State: **WI** Sampling Point: **DP-28 (wtd)**

Investigator(s): **Heather Patti, Mike Al-wathqiui** Section, Township, Range: **SW 1/4 Sec 15, T1N R22E**

Landform (hillslope, terrace, etc.): **wetland depression** Local relief (concave, convex, none): **concave**

Slope (%): **-** Lat: Long: Datum:

Soil Map Unit Name: **Beecher silt loam (BcA), 1-3% slopes , hydric via inclusions** WWI Classification: **none**

Are climatic / hydrologic conditions on the site typical for this time of year? Yes **X** No (if no, explain in Remarks)

Are Vegetation **N** Soil **N** or Hydrology **N** significantly disturbed? Are "Normal Circumstances" present? Yes No **X**

Are Vegetation **N** Soil **N** or Hydrology **Y*** naturally problematic? (if needed, explain any answers in Remarks)

SUMMARY OF FINDINGS --- Attach site map showing sampling point locations, transects, important features, etc.

Hydrophytic Vegetation Present?	Yes **X**	No	Is the Sampled Area		
Hydric Soil Present?	Yes **X**	No	within a Wetland?	Yes **X**	No
Wetland Hydrology Present?	Yes **X**	No	If yes, optional wetland site ID:	**W-13**	

Remarks: **This is a degraded fresh (wet) meadow in a man-made wetland depression created by grading activities. *This is a depressional area that recieves seasonal hydrology, thus making it naturally problematic. All three of the criteria are met, however.**

VEGETATION - Use scientific names for plants.

Sampling Point: **DP-28 (wtd)**

Tree Stratum (Plot size: **30'R**)	Absolute % Cover	Dominant Species	Indicator Status
1. ***Populus deltoides***	**5%**	**Y**	**FAC**
2.			
3.			
4.			
5.			
6.			
7.			
	5% = Total Cover		

Sapling/Shrub Stratum (Plot size: **15'R**)			
1. ***Salix interior***	**10%**	**Y**	**FACW**
2.			
3.			
4.			
5.			
6.			
7.			
	10% = Total Cover		

Herb Stratum (Plot size: **5'R**)			
1. ***Phragmites australis***	**80%**	**Y**	**FACW**
2. ***Typha X glauca***	**20%**	**N**	**OBL**
3. ***Euthamia graminifolia***	**10%**	**N**	**FACW**
4.			
5.			
6.			
7.			
8.			
9.			
10.			
11.			
12.			
13.			
14.			
	110% = Total Cover		

Woody Vine Stratum (Plot size: **30'R)**)			
1. **-**			
2.			
3.			
4.			
	0% = Total Cover		

Dominance Test Worksheet:

Number of Dominant Species That Are OBL, FACW, or FAC: **3** (A)

Total Number of Dominant Species Across All Strata: **3** (B)

Percent of Dominant Species That Are OBL, FACW, or FAC: **100%** (A/B)

Prevalence Index Worksheet:

Total % Cover of:		Multiply by:	
OBL species		x 1 =	
FACW species		x 2 =	
FAC species		x 3 =	
FACU species		x 4 =	
UPL species		x 5 =	
Column Totals:	(A)		(B)

Prevalence Index B/A =

Hydrophytic Vegetation Indicators:

- Rapid Test for Hydrophitic Vegetation
- **X** Dominance Test is >50%
- Prevalence Index is ≤ 3.0[1]
- Morphological Adaptations[1] (Provide supporting data in Remarks or on separate sheet)
- Problematic Hydrophytic Vegetation[1] (Explain)

[1] Indicators of hydric soil and wetland hydrology must be present, unless disturbed or problematic.

Hydrophytic Vegetation Present? Yes **X** No

Remarks: **This is a degraded fresh (wet) meadow in a man-made depression that resulted from previous grading activities. The hydrophytic vegetation criterion is met.**

SOIL Sampling Point: **DP-28 (wtd)**

Profile Description: (Describe to the depth needed to document the indicator or confirm the absence of indicators.)

Depth (inches)	Matrix Color (moist)	%	Redox Features Color (moist)	%	Type[1]	Loc[2]	Texture	Remarks
0-20+	**10YR 3/2**	**60**	**10YR 5/6**	**10**	**C**	**M**	**silty clay**	
	7.5YR 4/3	**30**	**-**	**-**			**silty clay**	

[1] Type: C=Concentration, D=Depletion, RM=Reduced Matrix, CS=Covered or Coated Sand Grains. [2] Location: PL=Pore Lining, M=Matrix

Hydric Soil Indicators:

- ___ Histosol (A1)
- ___ Histic Epipedon (A2)
- ___ Black Histic (A3)
- ___ Hydrogen Sulfide (A4)
- ___ Stratified Layers (A5)
- ___ 2 cm Much (A10)
- ___ Depleted Below Dark Surface (A11)
- ___ Thick Dark Surface (A12)
- ___ Sandy Mucky Mineral (S1)
- ___ Sandy Gleyed Matrix (S4)
- ___ Sandy Redox (S5)
- ___ Stripped Matrix (S6)
- ___ Loamy Mucky Mineral (F1)
- ___ Loamy Gleyed Matrix (F2)
- ___ Depleted Matrix (F3)
- **X** Redox Dark Surface (F6)
- ___ Depleted Dark Surface (F7)
- ___ Redox Depressions (F8)

Indicators for Problematic Hydric Soils[3]:

- ___ Coast Prairie Redox (A16) **(LRR,K,L,R)**
- ___ Dark Surface (S7) **(LRR,K,L)**
- ___ 5 cm mucky peat or peat (S3) **(LRR,K,L)**
- ___ Iron-Manganese Masses (F12) **(LRR,K,L,R)**
- ___ Very Shallow Dark Surface (TF12)
- ___ Other (Explain in Remarks)

[3] Indicators of hydrophytic evegetation and wetland hydrology must be present, unless disturbed or problematic.

Restrictive Layer (if observed):

Type: **n/a**

Depth (inches): **n/a**

Hydric Soil Present? **Yes** **X** **No** ___

Remarks: **The hydric soil criterion is met.**

HYDROLOGY

Wetland Hydrology Indicators:

Primary Indicators (minimum of one is required; check all that apply)

- ___ Surface Water (A1)
- ___ High Water Table (A2)
- ___ Saturation (A3)
- ___ Water Marks (B1)
- ___ Sediment Deposits (B2)
- ___ Drift Deposits (B3)
- ___ Algal Mat or Crust (B4)
- ___ Iron Deposits (B5)
- ___ Inundation Visible on Aerial Imagery (B7)
- ___ Sparsely Vegetated Concave Surface (B8)
- ___ Water-Stained Leaves (B9)
- **X** Aquatic Fauna (B13)
- ___ True Aquatic Plants (B14)
- ___ Hydrogen Sulfide Odor (C1)
- **X** Oxidized Rhizospheres on Living Roots (C3)
- ___ Presence of Reduced Iron (C4)
- ___ Recent Iron Reduction in Tilled Soils (C6)
- ___ Thin Muck Surface (C7)
- ___ Gauge or Well Data (D9)
- ___ Other (Explain in Remarks)

Secondary Indicators (minimum of two required)

- ___ Surface Soil Cracks (B6)
- ___ Drainage Patterns (B10)
- ___ Dry-Season Water Table (C2)
- ___ Crayfish Burrows (C8)
- **X** Saturation Visible on Aerial Imagery (C9)
- ___ Stunted or Stressed Plants (D1)
- **X** Geomorphic Position (D2)
- **X** FAC-Neutral Test (D5)

Field Observations:

Surface Water Present?	Yes ___	No **X**	Depth (inches): ___
Water Table Present?	Yes ___	No **X**	Depth (inches): ___
Saturation Present? (includes capillary fringe)	Yes ___	No **X**	Depth (inches): ___

Wetland Hydrology Present? **Yes** **X** **No** ___

Describe Recorded Data (stream gauge, monitoring well, aerial photos, previous inspections), if available:

Local WETS table, NOAA's AHPS map, NRCS Soils Map, recent aerial photos.

Remarks: **Frogs are present in this area and oxidized rhizospheres are present on living roots. Multiple secondary, hydrology indicators are present as well. The criterion is met.**

WETLAND DETERMINATION DATA FORM - Midwest Region

Project/Site: **Creekside Crossing** City/County: **Pleasant Prairie / Kenosha** Sampling Date: **Oct 23rd, 2014**

Applicant/Owner: **Bear Development, LLC** State: **WI** Sampling Point: **DP-29 (upl)**

Investigator(s): **Heather Patti, Mike Al-wathqiui** Section, Township, Range: **SW 1/4 Sec 15, T1N R22E**

Landform (hillslope, terrace, etc.): **backslope** Local relief (concave, convex, none): **convex**

Slope (%): **10%** Lat: Long: Datum:

Soil Map Unit Name: **Beecher silt loam (BcA), 1-3% slopes , hydric via inclusions** WWI Classification: **none**

Are climatic / hydrologic conditions on the site typical for this time of year? Yes **X** No (if no, explain in Remarks)

Are Vegetation **N** Soil **N** or Hydrology **N** significantly disturbed? Are "Normal Circumstances" present? Yes **X** No

Are Vegetation **N** Soil **N** or Hydrology **N** naturally problematic? (if needed, explain any answers in Remarks)

SUMMARY OF FINDINGS --- Attach site map showing sampling point locations, transects, important features, etc.

Hydrophytic Vegetation Present?	Yes		No	**X**	Is the Sampled Area
Hydric Soil Present?	Yes		No	**X**	within a Wetland? Yes No **X**
Wetland Hydrology Present?	Yes		No	**X**	If yes, optional wetland site ID:

Remarks: **This is an old field. None of the three criteria are met.**

VEGETATION - Use scientific names for plants.

Sampling Point: **DP-29 (upl)**

Tree Stratum (Plot size: **30'R**)	Absolute % Cover	Dominant Species	Indicator Status
1. **-**			
2.			
3.			
4.			
5.			
6.			
7.			
	0%	= Total Cover	

Sapling/Shrub Stratum (Plot size: **15'R**)			
1. **-**			
2.			
3.			
4.			
5.			
6.			
7.			
	0%	= Total Cover	

Herb Stratum (Plot size: **5'R**)			
1. ***Poa pratensis***	**80%**	**Y**	**FAC**
2. ***Solidago canadensis***	**60%**	**Y**	**FACU**
3. ***Melilotus alba***	**25%**	**N**	**FACU**
4. ***Daucus carota***	**10%**	**N**	**UPL**
5.			
6.			
7.			
8.			
9.			
10.			
11.			
12.			
13.			
14.			
	175%	= Total Cover	

Woody Vine Stratum (Plot size: **30'R**)			
1. **-**			
2.			
3.			
4.			
	0%	= Total Cover	

Dominance Test Worksheet:

Number of Dominant Species That Are OBL, FACW, or FAC: **1** (A)

Total Number of Dominant Species Across All Strata: **2** (B)

Percent of Dominant Species That Are OBL, FACW, or FAC: **50%** (A/B)

Prevalence Index Worksheet:

Total % Cover of:		Multiply by:	
OBL species	**0**	x 1 = **0**	
FACW species	**0**	x 2 = **0**	
FAC species	**80**	x 3 = **240**	
FACU species	**85**	x 4 = **340**	
UPL species	**10**	x 5 = **50**	
Column Totals:	**175** (A)	**630**	(B)

Prevalence Index B/A = **3.6**

Hydrophytic Vegetation Indicators:

- Rapid Test for Hydrophitic Vegetation
- Dominance Test is >50%
- Prevalence Index is ≤ 3.0[1]
- Morphological Adaptations[1] (Provide supporting data in Remarks or on separate sheet)
- Problematic Hydrophytic Vegetation[1] (Explain)

[1] Indicators of hydric soil and wetland hydrology must be present, unless disturbed or problematic.

Hydrophytic Vegetation Present? Yes No **X**

Remarks: **This is an old field dominated by Kentucky blue grass. The hydrophytic vegetation criterion is not met.**

SOIL Sampling Point: **DP-29 (upl)**

Profile Description: (Describe to the depth needed to document the indicator or confirm the absence of indicators.)

Depth (inches)	Matrix Color (moist)	%	Redox Features Color (moist)	%	Type[1]	Loc[2]	Texture	Remarks
0-12	**10YR 3/2**	**100**	**-**	**-**			**sandy loam**	
12-20+	**10YR 3/4**	**80**	**10YR 5/6**	**20**	**C**	**M**	**sandy loam**	

[1] Type: C=Concentration, D=Depletion, RM=Reduced Matrix, CS=Covered or Coated Sand Grains. [2] Location: PL=Pore Lining, M=Matrix

Hydric Soil Indicators:

- ___ Histosol (A1)
- ___ Histic Epipedon (A2)
- ___ Black Histic (A3)
- ___ Hydrogen Sulfide (A4)
- ___ Stratified Layers (A5)
- ___ 2 cm Much (A10)
- ___ Depleted Below Dark Surface (A11)
- ___ Thick Dark Surface (A12)
- ___ Sandy Mucky Mineral (S1)
- ___ Sandy Gleyed Matrix (S4)
- ___ Sandy Redox (S5)
- ___ Stripped Matrix (S6)
- ___ Loamy Mucky Mineral (F1)
- ___ Loamy Gleyed Matrix (F2)
- ___ Depleted Matrix (F3)
- ___ Redox Dark Surface (F6)
- ___ Depleted Dark Surface (F7)
- ___ Redox Depressions (F8)

Indicators for Problematic Hydric Soils[3]:

- ___ Coast Prairie Redox (A16) **(LRR,K,L,R)**
- ___ Dark Surface (S7) **(LRR,K,L)**
- ___ 5 cm mucky peat or peat (S3) **(LRR,K,L)**
- ___ Iron-Manganese Masses (F12) **(LRR,K,L,R)**
- ___ Very Shallow Dark Surface (TF12)
- ___ Other (Explain in Remarks)

[3] Indicators of hydrophytic evegetation and wetland hydrology must be present, unless disturbed or problematic.

Restrictive Layer (if observed):

Type: **n/a**

Depth (inches): **n/a**

Hydric Soil Present? **Yes** ___ **No** **X**

Remarks: **The hydric soil criterion is not met.**

HYDROLOGY

Wetland Hydrology Indicators:

Primary Indicators (minimum of one is required; check all that apply)

- ___ Surface Water (A1)
- ___ High Water Table (A2)
- ___ Saturation (A3)
- ___ Water Marks (B1)
- ___ Sediment Deposits (B2)
- ___ Drift Deposits (B3)
- ___ Algal Mat or Crust (B4)
- ___ Iron Deposits (B5)
- ___ Inundation Visible on Aerial Imagery (B7)
- ___ Sparsely Vegetated Concave Surface (B8)
- ___ Water-Stained Leaves (B9)
- ___ Aquatic Fauna (B13)
- ___ True Aquatic Plants (B14)
- ___ Hydrogen Sulfide Odor (C1)
- ___ Oxidized Rhizospheres on Living Roots (C3)
- ___ Presence of Reduced Iron (C4)
- ___ Recent Iron Reduction in Tilled Soils (C6)
- ___ Thin Muck Surface (C7)
- ___ Gauge or Well Data (D9)
- ___ Other (Explain in Remarks)

Secondary Indicators (minimum of two required)

- ___ Surface Soil Cracks (B6)
- ___ Drainage Patterns (B10)
- ___ Dry-Season Water Table (C2)
- ___ Crayfish Burrows (C8)
- ___ Saturation Visible on Aerial Imagery (C9)
- ___ Stunted or Stressed Plants (D1)
- ___ Geomorphic Position (D2)
- ___ FAC-Neutral Test (D5)

Field Observations:

Surface Water Present? Yes ___ No **X** Depth (inches): ___

Water Table Present? Yes ___ No **X** Depth (inches): ___

Saturation Present? (includes capillary fringe) Yes ___ No **X** Depth (inches): ___

Wetland Hydrology Present? **Yes** ___ **No** **X**

Describe Recorded Data (stream gauge, monitoring well, aerial photos, previous inspections), if available:

Local WETS table, NOAA's AHPS map, NRCS Soils Map, recent aerial photos

Remarks: **There is no hydrology in this area. The criterion is not met.**

WETLAND DETERMINATION DATA FORM - Midwest Region

Project/Site: **Creekside Crossing** City/County: **Pleasant Prairie / Kenosha** Sampling Date: **Oct 23rd, 2014**

Applicant/Owner: **Bear Development, LLC** State: **WI** Sampling Point: **DP-30 (wtd)**

Investigator(s): **Heather Patti, Mike Al-wathqiui** Section, Township, Range: **SW 1/4 Sec 15, T1N R22E**

Landform (hillslope, terrace, etc.): **wetland depression** Local relief (concave, convex, none): **concave**

Slope (%): **-** Lat: Long: Datum:

Soil Map Unit Name: **Beecher silt loam (BcA), 1-3% slopes , hydric via inclusions** WWI Classification: **none**

Are climatic / hydrologic conditions on the site typical for this time of year? Yes **X** No (if no, explain in Remarks)

Are Vegetation **N** Soil **N** or Hydrology **N** significantly disturbed? Are "Normal Circumstances" present? Yes No **X**

Are Vegetation **N** Soil **N** or Hydrology **Y*** naturally problematic? (if needed, explain any answers in Remarks)

SUMMARY OF FINDINGS --- Attach site map showing sampling point locations, transects, important features, etc.

Hydrophytic Vegetation Present?	Yes **X**	No	Is the Sampled Area		
Hydric Soil Present?	Yes **X**	No	within a Wetland?	Yes **X**	No
Wetland Hydrology Present?	Yes **X**	No	If yes, optional wetland site ID:	**W-14**	

Remarks: **This is a degraded fresh (wet) meadow. *This is a depressional area that recieves seasonal hydrology, thus making it naturally problematic. All three of the criteria are met.**

VEGETATION - Use scientific names for plants.

Sampling Point: **DP-30 (wtd)**

Tree Stratum (Plot size: **30'R**)	Absolute % Cover	Dominant Species	Indicator Status
1. **-**			
2.			
3.			
4.			
5.			
6.			
7.			
	0%	= Total Cover	

Sapling/Shrub Stratum (Plot size: **15'R**)			
1. ***Populus deltoides***	**10%**	**Y**	**FAC**
2.			
3.			
4.			
5.			
6.			
7.			
	10%	= Total Cover	

Herb Stratum (Plot size: **5'R**)			
1. ***Phalaris arundinacea***	**40%**	**Y**	**FACW**
2. ***Euthamia graminifolia***	**20%**	**Y**	**FACW**
3. ***Typha X glauca***	**20%**	**Y**	**OBL**
4. ***Panicum capillare***	**10%**	**N**	**FAC**
5.			
6.			
7.			
8.			
9.			
10.			
11.			
12.			
13.			
14.			
	90%	= Total Cover	

Woody Vine Stratum (Plot size: **30'R**)			
1. **-**			
2.			
3.			
4.			
	0%	= Total Cover	

Dominance Test Worksheet:

Number of Dominant Species That Are OBL, FACW, or FAC: **4** (A)

Total Number of Dominant Species Across All Strata: **4** (B)

Percent of Dominant Species That Are OBL, FACW, or FAC: **100%** (A/B)

Prevalence Index Worksheet:

Total % Cover of:		Multiply by:	
OBL species		x 1 =	
FACW species		x 2 =	
FAC species		x 3 =	
FACU species		x 4 =	
UPL species		x 5 =	
Column Totals:	(A)		(B)

Prevalence Index B/A =

Hydrophytic Vegetation Indicators:

- Rapid Test for Hydrophitic Vegetation
- **X** Dominance Test is >50%
- Prevalence Index is ≤ 3.0[1]
- Morphological Adaptations[1] (Provide supporting data in Remarks or on separate sheet)
- Problematic Hydrophytic Vegetation[1] (Explain)

[1] Indicators of hydric soil and wetland hydrology must be present, unless disturbed or problematic.

Hydrophytic Vegetation Present? Yes **X** No

Remarks: **This is a degraded fresh (wet) meadow. The hydrophytic vegetation criterion is met.**

SOIL Sampling Point: **DP-30 (wtd)**

Profile Description: (Describe to the depth needed to document the indicator or confirm the absence of indicators.)

Depth (inches)	Matrix Color (moist)	%	Redox Features Color (moist)	%	Type[1]	Loc[2]	Texture	Remarks
0-10	**7.5YR 4/3**	**90**	**10YR 5/6**	**10**	**C**	**M**	**silty clay**	***there is small gravel present**
10-18+	**7.5YR 4/2**	**80**	**10YR 5/6**	**20**	**C**	**M**	**silty clay**	**throughout the profile**

[1] Type: C=Concentration, D=Depletion, RM=Reduced Matrix, CS=Covered or Coated Sand Grains. [2] Location: PL=Pore Lining, M=Matrix

Hydric Soil Indicators:

- ___ Histosol (A1)
- ___ Histic Epipedon (A2)
- ___ Black Histic (A3)
- ___ Hydrogen Sulfide (A4)
- ___ Stratified Layers (A5)
- ___ 2 cm Much (A10)
- ___ Depleted Below Dark Surface (A11)
- ___ Thick Dark Surface (A12)
- ___ Sandy Mucky Mineral (S1)
- ___ Sandy Gleyed Matrix (S4)
- ___ Sandy Redox (S5)
- ___ Stripped Matrix (S6)
- ___ Loamy Mucky Mineral (F1)
- ___ Loamy Gleyed Matrix (F2)
- ___ Depleted Matrix (F3)
- ___ Redox Dark Surface (F6)
- ___ Depleted Dark Surface (F7)
- ___ Redox Depressions (F8)

Indicators for Problematic Hydric Soils[3]:

- ___ Coast Prairie Redox (A16) **(LRR,K,L,R)**
- ___ Dark Surface (S7) **(LRR,K,L)**
- ___ 5 cm mucky peat or peat (S3) **(LRR,K,L)**
- ___ Iron-Manganese Masses (F12) **(LRR,K,L,R)**
- ___ Very Shallow Dark Surface (TF12)
- ___ Other (Explain in Remarks)

[3] Indicators of hydrophytic evegetation and wetland hydrology must be present, unless disturbed or problematic.

Restrictive Layer (if observed):

Type: **n/a**

Depth (inches): **n/a**

Hydric Soil Present? **Yes** **X** **No** ___

Remarks: **The hydric soil criterion is met based on professional judgement - redox concentrations are at the soil surface.**

HYDROLOGY

Wetland Hydrology Indicators:

Primary Indicators (minimum of one is required; check all that apply)

- ___ Surface Water (A1)
- ___ High Water Table (A2)
- ___ Saturation (A3)
- ___ Water Marks (B1)
- ___ Sediment Deposits (B2)
- ___ Drift Deposits (B3)
- ___ Algal Mat or Crust (B4)
- ___ Iron Deposits (B5)
- ___ Inundation Visible on Aerial Imagery (B7)
- ___ Sparsely Vegetated Concave Surface (B8)
- ___ Water-Stained Leaves (B9)
- ___ Aquatic Fauna (B13)
- ___ True Aquatic Plants (B14)
- ___ Hydrogen Sulfide Odor (C1)
- ___ Oxidized Rhizospheres on Living Roots (C3)
- ___ Presence of Reduced Iron (C4)
- ___ Recent Iron Reduction in Tilled Soils (C6)
- ___ Thin Muck Surface (C7)
- ___ Gauge or Well Data (D9)
- ___ Other (Explain in Remarks)

Secondary Indicators (minimum of two required)

- ___ Surface Soil Cracks (B6)
- ___ Drainage Patterns (B10)
- ___ Dry-Season Water Table (C2)
- **X** Crayfish Burrows (C8)
- ___ Saturation Visible on Aerial Imagery (C9)
- ___ Stunted or Stressed Plants (D1)
- **X** Geomorphic Position (D2)
- **X** FAC-Neutral Test (D5)

Field Observations:

Surface Water Present?	Yes ___	No **X**	Depth (inches): ___
Water Table Present?	Yes ___	No **X**	Depth (inches): ___
Saturation Present? (includes capillary fringe)	Yes ___	No **X**	Depth (inches): ___

Wetland Hydrology Present? **Yes** **X** **No** ___

Describe Recorded Data (stream gauge, monitoring well, aerial photos, previous inspections), if available:

Local WETS table, NOAA's AHPS map, NRCS Soils Map, recent aerial photos

Remarks: **Multiple secondary hydrology indicators are present. The criterion is met.**

WETLAND DETERMINATION DATA FORM - Midwest Region

Project/Site: **Creekside Crossing** City/County: **Pleasant Prairie / Kenosha** Sampling Date: **Oct 23rd, 2014**

Applicant/Owner: **Bear Development, LLC** State: **WI** Sampling Point: **DP-31 (wtd)**

Investigator(s): **Heather Patti, Mike Al-wathqiui** Section, Township, Range: **SW 1/4 Sec 15, T1N R22E**

Landform (hillslope, terrace, etc.): **wetland depression** Local relief (concave, convex, none): **concave**

Slope (%): **-** Lat: Long: Datum:

Soil Map Unit Name: **Morley silt loam (MzdB), 2-6% slopes, non-hydric** WWI Classification: **none**

Are climatic / hydrologic conditions on the site typical for this time of year? Yes **X** No (if no, explain in Remarks)

Are Vegetation **N** Soil **N** or Hydrology **N** significantly disturbed? Are "Normal Circumstances" present? Yes No **X**

Are Vegetation **N** Soil **N** or Hydrology **Y*** naturally problematic? (if needed, explain any answers in Remarks)

SUMMARY OF FINDINGS --- Attach site map showing sampling point locations, transects, important features, etc.

Hydrophytic Vegetation Present?	Yes **X**	No	Is the Sampled Area		
Hydric Soil Present?	Yes **X**	No	within a Wetland?	Yes **X**	No
Wetland Hydrology Present?	Yes **X**	No	If yes, optional wetland site ID:	**W-15**	

Remarks: **This is a fresh (wet) meadow in a man-made wetland depression which is a result of previous grading activities. *This depressional area recieves seasonal hydrology, thus making it naturally problematic. All three of the criteria are met.**

VEGETATION - Use scientific names for plants.

Sampling Point: **DP-31 (wtd)**

Tree Stratum (Plot size: **30'R**)	Absolute % Cover	Dominant Species	Indicator Status
1. ***Salix nigra***	**5%**	**Y**	**OBL**
2.			
3.			
4.			
5.			
6.			
7.			
	5% = Total Cover		

Sapling/Shrub Stratum (Plot size: **15'R**)			
1. ***Salix interior***	**10%**	**Y**	**FACW**
2.			
3.			
4.			
5.			
6.			
7.			
	10% = Total Cover		

Herb Stratum (Plot size: **5'R**)			
1. ***Phalaris arundinacea***	**50%**	**Y**	**FACW**
2. ***Euthamia graminifolia***	**50%**	**Y**	**FACW**
3. ***Daucus carota***	**20%**	**N**	**UPL**
4. ***Aster lateriflorus***	**10%**	**N**	**FACW**
5.			
6.			
7.			
8.			
9.			
10.			
11.			
12.			
13.			
14.			
	130% = Total Cover		

Woody Vine Stratum (Plot size: **30'R**)			
1. **-**			
2.			
3.			
4.			
	0% = Total Cover		

Dominance Test Worksheet:

Number of Dominant Species That Are OBL, FACW, or FAC: **4** (A)

Total Number of Dominant Species Across All Strata: **4** (B)

Percent of Dominant Species That Are OBL, FACW, or FAC: **100%** (A/B)

Prevalence Index Worksheet:

Total % Cover of:		Multiply by:	
OBL species		x 1 =	
FACW species		x 2 =	
FAC species		x 3 =	
FACU species		x 4 =	
UPL species		x 5 =	
Column Totals:	(A)		(B)

Prevalence Index B/A =

Hydrophytic Vegetation Indicators:

X Rapid Test for Hydrophitic Vegetation

Dominance Test is >50%

Prevalence Index is ≤ 3.0[1]

Morphological Adaptations[1] (Provide supporting data in Remarks or on separate sheet)

Problematic Hydrophytic Vegetation[1] (Explain)

[1] Indicators of hydric soil and wetland hydrology must be present, unless disturbed or problematic.

Hydrophytic Vegetation Present? Yes **X** No

Remarks: **This is a fresh (wet) meadow in a man-made wetland depression which was likely created by previous grading activities. The hydrophytic vegetation criterion is met.**

SOIL Sampling Point: **DP-31 (wtd)**

Profile Description: (Describe to the depth needed to document the indicator or confirm the absence of indicators.)

Depth	Matrix		Redox Features					
(inches)	Color (moist)	%	Color (moist)	%	Type[1]	Loc[2]	Texture	Remarks
0-4	10YR 3/2	100	-	-			silty clay loam	
4-20	10YR 3/1	80	7.5YR 4/6	20	C	M	silty clay loam	
20-22+	10YR 5/2	80	10YR 5/6	20	C	M	silty clay	

[1] Type: C=Concentration, D=Depletion, RM=Reduced Matrix, CS=Covered or Coated Sand Grains. [2] Location: PL=Pore Lining, M=Matrix

Hydric Soil Indicators:

- ___ Histosol (A1)
- ___ Histic Epipedon (A2)
- ___ Black Histic (A3)
- ___ Hydrogen Sulfide (A4)
- ___ Stratified Layers (A5)
- ___ 2 cm Much (A10)
- ___ Depleted Below Dark Surface (A11)
- ___ Thick Dark Surface (A12)
- ___ Sandy Mucky Mineral (S1)
- ___ Sandy Gleyed Matrix (S4)
- ___ Sandy Redox (S5)
- ___ Stripped Matrix (S6)
- ___ Loamy Mucky Mineral (F1)
- ___ Loamy Gleyed Matrix (F2)
- ___ Depleted Matrix (F3)
- X Redox Dark Surface (F6)
- ___ Depleted Dark Surface (F7)
- ___ Redox Depressions (F8)

Indicators for Problematic Hydric Soils[3]:

- ___ Coast Prairie Redox (A16) **(LRR,K,L,R)**
- ___ Dark Surface (S7) **(LRR,K,L)**
- ___ 5 cm mucky peat or peat (S3) **(LRR,K,L)**
- ___ Iron-Manganese Masses (F12) **(LRR,K,L,R)**
- ___ Very Shallow Dark Surface (TF12)
- ___ Other (Explain in Remarks)

[3] Indicators of hydrophytic evegetation and wetland hydrology must be present, unless disturbed or problematic.

Restrictive Layer (if observed):

Type: **n/a**

Depth (inches): **n/a**

Hydric Soil Present? **Yes** X **No** ___

Remarks: **The hydric soil criterion is met.**

HYDROLOGY

Wetland Hydrology Indicators:

Primary Indicators (minimum of one is required; check all that apply)

- ___ Surface Water (A1)
- ___ High Water Table (A2)
- ___ Saturation (A3)
- ___ Water Marks (B1)
- ___ Sediment Deposits (B2)
- ___ Drift Deposits (B3)
- ___ Algal Mat or Crust (B4)
- ___ Iron Deposits (B5)
- ___ Inundation Visible on Aerial Imagery (B7)
- ___ Sparsely Vegetated Concave Surface (B8)
- ___ Water-Stained Leaves (B9)
- ___ Aquatic Fauna (B13)
- ___ True Aquatic Plants (B14)
- ___ Hydrogen Sulfide Odor (C1)
- X Oxidized Rhizospheres on Living Roots (C3)
- ___ Presence of Reduced Iron (C4)
- ___ Recent Iron Reduction in Tilled Soils (C6)
- ___ Thin Muck Surface (C7)
- ___ Gauge or Well Data (D9)
- ___ Other (Explain in Remarks)

Secondary Indicators (minimum of two required)

- ___ Surface Soil Cracks (B6)
- ___ Drainage Patterns (B10)
- ___ Dry-Season Water Table (C2)
- ___ Crayfish Burrows (C8)
- ___ Saturation Visible on Aerial Imagery (C9)
- ___ Stunted or Stressed Plants (D1)
- X Geomorphic Position (D2)
- X FAC-Neutral Test (D5)

Field Observations:

Surface Water Present?	Yes ___	No X	Depth (inches): ___
Water Table Present?	Yes ___	No X	Depth (inches): ___
Saturation Present? (includes capillary fringe)	Yes ___	No X	Depth (inches): ___

Wetland Hydrology Present? **Yes** X **No** ___

Describe Recorded Data (stream gauge, monitoring well, aerial photos, previous inspections), if available:

Local WETS table, NOAA's AHPS map, NRCS Soils Map, recent aerial photos

Remarks: **There are oxidized rhizospheres present on living roots as well as multiple secondary hydrology indicators.**

WETLAND DETERMINATION DATA FORM - Midwest Region

Project/Site: **Creekside Crossing** City/County: **Pleasant Prairie / Kenosha** Sampling Date: **Oct 14th, 2014**

Applicant/Owner: **Bear Development, LLC** State: **WI** Sampling Point: **DP-32 (upl)**

Investigator(s): **Tina Myers, Mike Al-wathiqui** Section, Township, Range: **SW 1/4 Sec 15, T1N R22E**

Landform (hillslope, terrace, etc.): **slight backslope** Local relief (concave, convex, none): **convex**

Slope (%): **3%** Lat: Long: Datum:

Soil Map Unit Name: **Morley silt loam (MzdB2), 2-6% slopes, eroded (non-hydric)** WWI Classification: **none**

Are climatic / hydrologic conditions on the site typical for this time of year? Yes **X** No (if no, explain in Remarks)

Are Vegetation **N** Soil **N** or Hydrology **N** significantly disturbed? Are "Normal Circumstances" present? Yes **X** No

Are Vegetation **N** Soil **N** or Hydrology **N** naturally problematic? (if needed, explain any answers in Remarks)

SUMMARY OF FINDINGS --- Attach site map showing sampling point locations, transects, important features, etc.

Hydrophytic Vegetation Present?	Yes		No	**X**	Is the Sampled Area
Hydric Soil Present?	Yes		No	**X**	within a Wetland? Yes No **X**
Wetland Hydrology Present?	Yes		No	**X**	If yes, optional wetland site ID:

Remarks: **This is an old field. None of the three criteria are met.**

VEGETATION - Use scientific names for plants.

Sampling Point: **DP-32 (upl)**

Tree Stratum (Plot size: **30'R**)	Absolute % Cover	Dominant Species	Indicator Status
1. **-**			
2.			
3.			
4.			
5.			
6.			
7.			
	0%	= Total Cover	

Sapling/Shrub Stratum (Plot size: **15'R**)			
1. **-**			
2.			
3.			
4.			
5.			
6.			
7.			
	0%	= Total Cover	

Herb Stratum (Plot size: **5'R**)			
1. ***Lotus corniculatus***	**50%**	**Y**	**FACU**
2. ***Trifolium pratense***	**30%**	**Y**	**FACU**
3. ***Solidago canadensis***	**15%**	**N**	**FACU**
4. ***Daucus carota***	**10%**	**N**	**UPL**
5. ***Taraxacum officinale***	**5%**	**N**	**FACU**
6. ***Aster pilosum***	**5%**	**N**	**FACU**
7.			
8.			
9.			
10.			
11.			
12.			
13.			
14.			
	115%	= Total Cover	

Woody Vine Stratum (Plot size: **30'R**)			
-			
1.			
2.			
3.			
4.			
	0%	= Total Cover	

Dominance Test Worksheet:

Number of Dominant Species That Are OBL, FACW, or FAC: **2** (A)

Total Number of Dominant Species Across All Strata: **0** (B)

Percent of Dominant Species That Are OBL, FACW, or FAC: **0%** (A/B)

Prevalence Index Worksheet:

Total % Cover of:		Multiply by:	
OBL species		x 1 =	
FACW species		x 2 =	
FAC species		x 3 =	
FACU species		x 4 =	
UPL species		x 5 =	
Column Totals:	(A)		(B)

Prevalence Index B/A =

Hydrophytic Vegetation Indicators:

- Rapid Test for Hydrophitic Vegetation
- Dominance Test is >50%
- Prevalence Index is ≤ 3.0[1]
- Morphological Adaptations[1] (Provide supporting data in Remarks or on separate sheet)
- Problematic Hydrophytic Vegetation[1] (Explain)

[1] Indicators of hydric soil and wetland hydrology must be present, unless disturbed or problematic.

Hydrophytic Vegetation Present? Yes No **X**

Remarks: **This is an old field uplsope of W-3. The hydrophytic vegetation criterion is not met.**

SOIL Sampling Point: **DP-32 (upl)**

Profile Description: (Describe to the depth needed to document the indicator or confirm the absence of indicators.)

Depth	Matrix		Redox Features					
(inches)	Color (moist)	%	Color (moist)	%	Type[1]	Loc[2]	Texture	Remarks
0-21+	**10YR 4/2**	**70**	**10YR 5/6**	**20**	**C**	**M**	**sandy clay loam**	
			7.5YR 5/8	**10**	**C**	**M**		

[1] Type: C=Concentration, D=Depletion, RM=Reduced Matrix, CS=Covered or Coated Sand Grains. [2] Location: PL=Pore Lining, M=Matrix

Hydric Soil Indicators:

- ___ Histosol (A1)
- ___ Histic Epipedon (A2)
- ___ Black Histic (A3)
- ___ Hydrogen Sulfide (A4)
- ___ Stratified Layers (A5)
- ___ 2 cm Much (A10)
- ___ Depleted Below Dark Surface (A11)
- ___ Thick Dark Surface (A12)
- ___ Sandy Mucky Mineral (S1)
- ___ Sandy Gleyed Matrix (S4)
- ___ Sandy Redox (S5)
- ___ Stripped Matrix (S6)
- ___ Loamy Mucky Mineral (F1)
- ___ Loamy Gleyed Matrix (F2)
- ___ Depleted Matrix (F3)
- ___ Redox Dark Surface (F6)
- ___ Depleted Dark Surface (F7)
- ___ Redox Depressions (F8)

Indicators for Problematic Hydric Soils[3]:

- ___ Coast Prairie Redox (A16) **(LRR,K,L,R)**
- ___ Dark Surface (S7) **(LRR,K,L)**
- ___ 5 cm mucky peat or peat (S3) **(LRR,K,L)**
- ___ Iron-Manganese Masses (F12) **(LRR,K,L,R)**
- ___ Very Shallow Dark Surface (TF12)
- ___ Other (Explain in Remarks)

[3] Indicators of hydrophytic evegetation and wetland hydrology must be present, unless disturbed or problematic.

Restrictive Layer (if observed):

Type: **n/a**

Depth (inches): **n/a**

Hydric Soil Present? **Yes** ___ **No** **X**

Remarks: **The hydric soil criterion is not met.**

HYDROLOGY

Wetland Hydrology Indicators:

Primary Indicators (minimum of one is required; check all that apply)

- ___ Surface Water (A1)
- ___ High Water Table (A2)
- ___ Saturation (A3)
- ___ Water Marks (B1)
- ___ Sediment Deposits (B2)
- ___ Drift Deposits (B3)
- ___ Algal Mat or Crust (B4)
- ___ Iron Deposits (B5)
- ___ Inundation Visible on Aerial Imagery (B7)
- ___ Sparsely Vegetated Concave Surface (B8)
- ___ Water-Stained Leaves (B9)
- ___ Aquatic Fauna (B13)
- ___ True Aquatic Plants (B14)
- ___ Hydrogen Sulfide Odor (C1)
- ___ Oxidized Rhizospheres on Living Roots (C3)
- ___ Presence of Reduced Iron (C4)
- ___ Recent Iron Reduction in Tilled Soils (C6)
- ___ Thin Muck Surface (C7)
- ___ Gauge or Well Data (D9)
- ___ Other (Explain in Remarks)

Secondary Indicators (minimum of two required)

- ___ Surface Soil Cracks (B6)
- ___ Drainage Patterns (B10)
- ___ Dry-Season Water Table (C2)
- ___ Crayfish Burrows (C8)
- ___ Saturation Visible on Aerial Imagery (C9)
- ___ Stunted or Stressed Plants (D1)
- ___ Geomorphic Position (D2)
- ___ FAC-Neutral Test (D5)

Field Observations:

Surface Water Present?	Yes ___	No **X**	Depth (inches): ___
Water Table Present?	Yes ___	No **X**	Depth (inches): ___
Saturation Present? (includes capillary fringe)	Yes ___	No **X**	Depth (inches): ___

Wetland Hydrology Present? **Yes** ___ **No** **X**

Describe Recorded Data (stream gauge, monitoring well, aerial photos, previous inspections), if available:

Local WETS table, NOAA's AHPS map, NRCS Soils Map, recent aerial photos

Remarks: **There is no hydrology in this area. The criterion is not met.**

WETLAND DETERMINATION DATA FORM - Midwest Region

Project/Site: **Creekside Crossing** City/County: **Pleasant Prairie / Kenosha** Sampling Date: **Oct 14th, 2014**

Applicant/Owner: **Bear Development, LLC** State: **WI** Sampling Point: **DP-33 (wtd)**

Investigator(s): **Tina Myers, Mike Al-wathiqui** Section, Township, Range: **SW 1/4 Sec 15, T1N R22E**

Landform (hillslope, terrace, etc.): **man-made drainageway** Local relief (concave, convex, none): **concave**

Slope (%): **-** Lat: Long: Datum:

Soil Map Unit Name: **Morley silt loam (MzdB2), 2-6% slopes, eroded (non-hydric)** WWI Classification: **none**

Are climatic / hydrologic conditions on the site typical for this time of year? Yes **X** No (if no, explain in Remarks)

Are Vegetation **N** Soil **N** or Hydrology **N** significantly disturbed? Are "Normal Circumstances" present? Yes **X** No

Are Vegetation **N** Soil **N** or Hydrology **N** naturally problematic? (if needed, explain any answers in Remarks)

SUMMARY OF FINDINGS --- Attach site map showing sampling point locations, transects, important features, etc.

Hydrophytic Vegetation Present?	Yes **X**	No	Is the Sampled Area		
Hydric Soil Present?	Yes **X**	No	within a Wetland?	Yes **X**	No
Wetland Hydrology Present?	Yes **X**	No	If yes, optional wetland site ID:	**W-3**	

Remarks: **This is a man-made swale which conveys runoff from the sourrounding residential development into the nearby stormwater pond to the west.**

VEGETATION - Use scientific names for plants.

Sampling Point: **DP-33 (wtd)**

Tree Stratum (Plot size: **30'R**)	Absolute % Cover	Dominant Species	Indicator Status
1. **-**			
2.			
3.			
4.			
5.			
6.			
7.			
	0% = Total Cover		

Sapling/Shrub Stratum (Plot size: **15'R**)			
1. ***Populus deltoides***	**20%**	**Y**	**FAC**
2. ***Salix interior***	**10%**	**Y**	**FACW**
3.			
4.			
5.			
6.			
7.			
	30% = Total Cover		

Herb Stratum (Plot size: **5'R**)			
1. ***Phragmites australis***	**50%**	**Y**	**FACW**
2. ***Poa pratensis***	**25%**	**Y**	**FAC**
3. ***Euthamia graminifolia***	**10%**	**N**	**FACW**
4. ***Aster novae-angliae***	**5%**	**N**	**FACW**
5.			
6.			
7.			
8.			
9.			
10.			
11.			
12.			
13.			
14.			
	90% = Total Cover		

Woody Vine Stratum (Plot size: **30'R**)			
1. **-**			
2.			
3.			
4.			
	0% = Total Cover		

Dominance Test Worksheet:

Number of Dominant Species That Are OBL, FACW, or FAC: **4** (A)

Total Number of Dominant Species Across All Strata: **4** (B)

Percent of Dominant Species That Are OBL, FACW, or FAC: **100%** (A/B)

Prevalence Index Worksheet:

Total % Cover of:		Multiply by:	
OBL species		x 1 =	
FACW species		x 2 =	
FAC species		x 3 =	
FACU species		x 4 =	
UPL species		x 5 =	
Column Totals:	(A)		(B)

Prevalence Index B/A =

Hydrophytic Vegetation Indicators:

- Rapid Test for Hydrophitic Vegetation
- **X** Dominance Test is >50%
- Prevalence Index is ≤ 3.0[1]
- Morphological Adaptations[1] (Provide supporting data in Remarks or on separate sheet)
- Problematic Hydrophytic Vegetation[1] (Explain)

[1] Indicators of hydric soil and wetland hydrology must be present, unless disturbed or problematic.

Hydrophytic Vegetation Present? Yes **X** No

Remarks: **The hydrophytic vegetation criterion is met.**

SOIL Sampling Point: **DP-33 (wtd)**

Profile Description: (Describe to the depth needed to document the indicator or confirm the absence of indicators.)

Depth	Matrix		Redox Features					
(inches)	Color (moist)	%	Color (moist)	%	Type[1]	Loc[2]	Texture	Remarks
0-5	10YR 5/2	100	-	-			silty clay loam	
5-15	10YR 5/2	80	7.5YR 4/6	20	C	M	sandy clay loam	
15-20+	10YR 5/2	70	7.5YR 4/6	30	C	M	silty clay	

[1] Type: C=Concentration, D=Depletion, RM=Reduced Matrix, CS=Covered or Coated Sand Grains. [2] Location: PL=Pore Lining, M=Matrix

Hydric Soil Indicators:

- ___ Histosol (A1)
- ___ Histic Epipedon (A2)
- ___ Black Histic (A3)
- ___ Hydrogen Sulfide (A4)
- ___ Stratified Layers (A5)
- ___ 2 cm Much (A10)
- ___ Depleted Below Dark Surface (A11)
- ___ Thick Dark Surface (A12)
- ___ Sandy Mucky Mineral (S1)
- ___ Sandy Gleyed Matrix (S4)
- ___ Sandy Redox (S5)
- ___ Stripped Matrix (S6)
- ___ Loamy Mucky Mineral (F1)
- ___ Loamy Gleyed Matrix (F2)
- X Depleted Matrix (F3)
- ___ Redox Dark Surface (F6)
- ___ Depleted Dark Surface (F7)
- ___ Redox Depressions (F8)

Indicators for Problematic Hydric Soils[3]:

- ___ Coast Prairie Redox (A16) **(LRR,K,L,R)**
- ___ Dark Surface (S7) **(LRR,K,L)**
- ___ 5 cm mucky peat or peat (S3) **(LRR,K,L)**
- ___ Iron-Manganese Masses (F12) **(LRR,K,L,R)**
- ___ Very Shallow Dark Surface (TF12)
- ___ Other (Explain in Remarks)

[3] Indicators of hydrophytic evegetation and wetland hydrology must be present, unless disturbed or problematic.

Restrictive Layer (if observed):

Type: **n/a**

Depth (inches): **n/a**

Hydric Soil Present? **Yes** X **No** ___

Remarks: **The hydric soil criterion is met.**

HYDROLOGY

Wetland Hydrology Indicators:

Primary Indicators (minimum of one is required; check all that apply)

- ___ Surface Water (A1)
- ___ High Water Table (A2)
- X Saturation (A3)
- ___ Water Marks (B1)
- ___ Sediment Deposits (B2)
- ___ Drift Deposits (B3)
- ___ Algal Mat or Crust (B4)
- ___ Iron Deposits (B5)
- ___ Inundation Visible on Aerial Imagery (B7)
- ___ Sparsely Vegetated Concave Surface (B8)
- ___ Water-Stained Leaves (B9)
- ___ Aquatic Fauna (B13)
- ___ True Aquatic Plants (B14)
- ___ Hydrogen Sulfide Odor (C1)
- ___ Oxidized Rhizospheres on Living Roots (C3)
- ___ Presence of Reduced Iron (C4)
- ___ Recent Iron Reduction in Tilled Soils (C6)
- ___ Thin Muck Surface (C7)
- ___ Gauge or Well Data (D9)
- ___ Other (Explain in Remarks)

Secondary Indicators (minimum of two required)

- ___ Surface Soil Cracks (B6)
- ___ Drainage Patterns (B10)
- X Dry-Season Water Table (C2)
- ___ Crayfish Burrows (C8)
- ___ Saturation Visible on Aerial Imagery (C9)
- ___ Stunted or Stressed Plants (D1)
- X Geomorphic Position (D2)
- X FAC-Neutral Test (D5)

Field Observations:

Surface Water Present?	Yes	___	No	X	Depth (inches): ___
Water Table Present?	Yes	X	No	___	Depth (inches): 17"
Saturation Present? (includes capillary fringe)	Yes	X	No	___	Depth (inches): 0"

Wetland Hydrology Present? **Yes** X **No** ___

Describe Recorded Data (stream gauge, monitoring well, aerial photos, previous inspections), if available:

Local WETS table, NOAA's AHPS map, NRCS Soils Map, recent aerial photos

Remarks: **The water table is present at 17" with saturation at the surface. Multiple secondary hydrology indicators are present as well. The criterion is met.**

WETLAND DETERMINATION DATA FORM - Midwest Region

Project/Site: **Creekside Crossing** City/County: **Pleasant Prairie / Kenosha** Sampling Date: **Oct 20th, 2014**

Applicant/Owner: **Bear Development, LLC** State: **WI** Sampling Point: **DP-34 (upl)**

Investigator(s): **Tina Myers** Section, Township, Range: **SW 1/4 Sec 15, T1N R22E**

Landform (hillslope, terrace, etc.): **hillslope** Local relief (concave, convex, none): **none**

Slope (%): **50%** Lat: Long: Datum:

Soil Map Unit Name: **Morley silt loam (MzdB2), 2-6% slopes, eroded (non-hydric)** WWI Classification: **none**

Are climatic / hydrologic conditions on the site typical for this time of year? Yes **X** No (if no, explain in Remarks)

Are Vegetation **Y*** Soil **Y**** or Hydrology **N** significantly disturbed? Are "Normal Circumstances" present? Yes No **X**

Are Vegetation **N** Soil **N** or Hydrology **N** naturally problematic? (if needed, explain any answers in Remarks)

SUMMARY OF FINDINGS --- Attach site map showing sampling point locations, transects, important features, etc.

Hydrophytic Vegetation Present?	Yes		No	**X**	Is the Sampled Area
Hydric Soil Present?	Yes		No	**X**	within a Wetland? Yes No **X**
Wetland Hydrology Present?	Yes		No	**X**	If yes, optional wetland site ID:

Remarks: **This is an upland area dominated by Kentucky blue grass and bird's foot trefoil. *The grass is mowed in this area. **There is fill material present in the soil profile as well. None of the three criteria are met.**

VEGETATION - Use scientific names for plants.

Sampling Point: **DP-34 (upl)**

Tree Stratum (Plot size: **30'R**)	Absolute % Cover	Dominant Species	Indicator Status
1. **-**			
2.			
3.			
4.			
5.			
6.			
7.			
	0%	= Total Cover	

Sapling/Shrub Stratum (Plot size: **15'R**)			
1. **-**			
2.			
3.			
4.			
5.			
6.			
7.			
	0%	= Total Cover	

Herb Stratum (Plot size: **5'R**)			
1. ***Poa pratensis***	**100%**	**Y**	**FAC**
2. ***Lotus corniculatus***	**40%**	**Y**	**FACU**
3. ***Taraxacum officionale***	**5%**	**N**	**FACU**
4.			
5.			
6.			
7.			
8.			
9.			
10.			
11.			
12.			
13.			
14.			
	145%	= Total Cover	

Woody Vine Stratum (Plot size: **30'R)**)			
1. **-**			
2.			
3.			
4.			
		= Total Cover	

Dominance Test Worksheet:

Number of Dominant Species That Are OBL, FACW, or FAC: **1** (A)

Total Number of Dominant Species Across All Strata: **2** (B)

Percent of Dominant Species That Are OBL, FACW, or FAC: **50%** (A/B)

Prevalence Index Worksheet:

Total % Cover of:		Multiply by:	
OBL species	**0**	x 1 = **0**	
FACW species	**0**	x 2 = **0**	
FAC species	**100**	x 3 = **300**	
FACU species	**45**	x 4 = **180**	
UPL species	**0**	x 5 = **0**	
Column Totals:	**145** (A)	**480**	(B)

Prevalence Index B/A = **3.3**

Hydrophytic Vegetation Indicators:

_____ Rapid Test for Hydrophitic Vegetation

_____ Dominance Test is >50%

_____ Prevalence Index is ≤ 3.0[1]

_____ Morphological Adaptations[1] (Provide supporting data in Remarks or on separate sheet)

_____ Problematic Hydrophytic Vegetation[1] (Explain)

[1] Indicators of hydric soil and wetland hydrology must be present, unless disturbed or problematic.

Hydrophytic Vegetation Present? Yes No **X**

Remarks: **This is an upland area that ocassionally gets mowed, doninated by Kentucky blue grass and bird's foot trefoil. The hydrophytic vegetation criterion is not met.**

SOIL Sampling Point: **DP-34 (upl)**

Profile Description: (Describe to the depth needed to document the indicator or confirm the absence of indicators.)

Depth (inches)	Matrix Color (moist)	%	Redox Features Color (moist)	%	Type[1]	Loc[2]	Texture	Remarks
0-4	**10YR 3/2**	**50**	**-**	**-**			**silty clay loam**	
	10YR 3/3	**50**	**-**	**-**				
4-24	**10YR 5/3**	**80**	**2.5YR 5/8**	**10**	**C**	**M**	**silty clay loam**	***the soils are mixed with gravel fill**
	10YR 6/1	**10**	**-**	**-**				

[1] Type: C=Concentration, D=Depletion, RM=Reduced Matrix, CS=Covered or Coated Sand Grains. [2] Location: PL=Pore Lining, M=Matrix

Hydric Soil Indicators:

- ___ Histosol (A1)
- ___ Histic Epipedon (A2)
- ___ Black Histic (A3)
- ___ Hydrogen Sulfide (A4)
- ___ Stratified Layers (A5)
- ___ 2 cm Much (A10)
- ___ Depleted Below Dark Surface (A11)
- ___ Thick Dark Surface (A12)
- ___ Sandy Mucky Mineral (S1)
- ___ Sandy Gleyed Matrix (S4)
- ___ Sandy Redox (S5)
- ___ Stripped Matrix (S6)
- ___ Loamy Mucky Mineral (F1)
- ___ Loamy Gleyed Matrix (F2)
- ___ Depleted Matrix (F3)
- ___ Redox Dark Surface (F6)
- ___ Depleted Dark Surface (F7)
- ___ Redox Depressions (F8)

Indicators for Problematic Hydric Soils[3]:

- ___ Coast Prairie Redox (A16) **(LRR,K,L,R)**
- ___ Dark Surface (S7) **(LRR,K,L)**
- ___ 5 cm mucky peat or peat (S3) **(LRR,K,L)**
- ___ Iron-Manganese Masses (F12) **(LRR,K,L,R)**
- ___ Very Shallow Dark Surface (TF12)
- ___ Other (Explain in Remarks)

[3] Indicators of hydrophytic evegetation and wetland hydrology must be present, unless disturbed or problematic.

Restrictive Layer (if observed):

Type: **n/a**

Depth (inches): **n/a**

Hydric Soil Present? **Yes** ___ **No** **X**

Remarks: **There is fill material present in the profile. The hydric soil criterion is not met.**

HYDROLOGY

Wetland Hydrology Indicators:

Primary Indicators (minimum of one is required; check all that apply)

- ___ Surface Water (A1)
- ___ High Water Table (A2)
- ___ Saturation (A3)
- ___ Water Marks (B1)
- ___ Sediment Deposits (B2)
- ___ Drift Deposits (B3)
- ___ Algal Mat or Crust (B4)
- ___ Iron Deposits (B5)
- ___ Inundation Visible on Aerial Imagery (B7)
- ___ Sparsely Vegetated Concave Surface (B8)
- ___ Water-Stained Leaves (B9)
- ___ Aquatic Fauna (B13)
- ___ True Aquatic Plants (B14)
- ___ Hydrogen Sulfide Odor (C1)
- ___ Oxidized Rhizospheres on Living Roots (C3)
- ___ Presence of Reduced Iron (C4)
- ___ Recent Iron Reduction in Tilled Soils (C6)
- ___ Thin Muck Surface (C7)
- ___ Gauge or Well Data (D9)
- ___ Other (Explain in Remarks)

Secondary Indicators (minimum of two required)

- ___ Surface Soil Cracks (B6)
- ___ Drainage Patterns (B10)
- ___ Dry-Season Water Table (C2)
- ___ Crayfish Burrows (C8)
- ___ Saturation Visible on Aerial Imagery (C9)
- ___ Stunted or Stressed Plants (D1)
- ___ Geomorphic Position (D2)
- ___ FAC-Neutral Test (D5)

Field Observations:

Surface Water Present? Yes ___ No **X** Depth (inches): ___

Water Table Present? Yes ___ No **X** Depth (inches): ___

Saturation Present? (includes capillary fringe) Yes ___ No **X** Depth (inches): ___

Wetland Hydrology Present? **Yes** ___ **No** **X**

Describe Recorded Data (stream gauge, monitoring well, aerial photos, previous inspections), if available:

Local WETS table, NOAA's AHPS map, NRCS Soils Map, recent aerial photos

Remarks: **There is no hydrology in this area. The steep slope conveys water quickly down towards W-9. The criterion is not met.**

WETLAND DETERMINATION DATA FORM - Midwest Region

Project/Site: **Creekside Crossing** City/County: **Pleasant Prairie / Kenosha** Sampling Date: **Oct 20th, 2014**

Applicant/Owner: **Bear Development, LLC** State: **WI** Sampling Point: **DP-35 (wtd)**

Investigator(s): **Tina Myers** Section, Township, Range: **SW 1/4 Sec 15, T1N R22E**

Landform (hillslope, terrace, etc.): **depression** Local relief (concave, convex, none): **convex**

Slope (%): **-** Lat: Long: Datum:

Soil Map Unit Name: **Morley silt loam (MzdB2), 2-6% slopes, eroded (non-hydric)** WWI Classification: **none**

Are climatic / hydrologic conditions on the site typical for this time of year? Yes **X** No (if no, explain in Remarks)

Are Vegetation **N** Soil **N** or Hydrology **N** significantly disturbed? Are "Normal Circumstances" present? Yes **X** No

Are Vegetation **N** Soil **N** or Hydrology **N** naturally problematic? (if needed, explain any answers in Remarks) **W-9**

SUMMARY OF FINDINGS --- Attach site map showing sampling point locations, transects, important features, etc.

Hydrophytic Vegetation Present?	Yes **X**	No	Is the Sampled Area		
Hydric Soil Present?	Yes	No **X**	within a Wetland?	Yes **X**	No
Wetland Hydrology Present?	Yes **X**	No	If yes, optional wetland site ID:	**W-9**	

Remarks: **This wetland may have been created as a stormwater feature. The hydric soil criterion is not met, but the vegetation and hydrology indicate that this is a wetland.**

VEGETATION - Use scientific names for plants.

Sampling Point: **DP-35 (wtd)**

Tree Stratum (Plot size: **30'R**)	Absolute % Cover	Dominant Species	Indicator Status
1. **-**			
2.			
3.			
4.			
5.			
6.			
7.			
	0%	= Total Cover	

Sapling/Shrub Stratum (Plot size: **15'R**)			
1. **-**			
2.			
3.			
4.			
5.			
6.			
7.			
	0%	= Total Cover	

Herb Stratum (Plot size: **5'R**)			
1. ***Typha angustifolia***	**60%**	**Y**	**OBL**
2. ***Epilobium coloratum***	**30%**	**Y**	**OBL**
3. ***Poa pratensis***	**25%**	**N**	**FAC**
4. ***Euthamia graminifolia***	**10%**	**N**	**FACW**
5. ***Solidago canadensis***	**10%**	**N**	**FACU**
6. ***Juncus torreyi***	**5%**	**N**	**FACW**
7.			
8.			
9.			
10.			
11.			
12.			
13.			
14.			
	140%	= Total Cover	

Woody Vine Stratum (Plot size: **30'R)**)			
1. **-**			
2.			
3.			
4.			
	0%	= Total Cover	

Dominance Test Worksheet:

Number of Dominant Species That Are OBL, FACW, or FAC: **2** (A)

Total Number of Dominant Species Across All Strata: **2** (B)

Percent of Dominant Species That Are OBL, FACW, or FAC: **100%** (A/B)

Prevalence Index Worksheet:

Total % Cover of:		Multiply by:	
OBL species		x 1 =	
FACW species		x 2 =	
FAC species		x 3 =	
FACU species		x 4 =	
UPL species		x 5 =	
Column Totals:	(A)		(B)

Prevalence Index B/A =

Hydrophytic Vegetation Indicators:

X Rapid Test for Hydrophitic Vegetation

Dominance Test is >50%

Prevalence Index is ≤ 3.0[1]

Morphological Adaptations[1] (Provide supporting data in Remarks or on separate sheet)

Problematic Hydrophytic Vegetation[1] (Explain)

[1] Indicators of hydric soil and wetland hydrology must be present, unless disturbed or problematic.

Hydrophytic Vegetation Present? Yes **X** No

Remarks: **This is a large depression with steep slopes which may have been created as a stormwater feature. The hydrophytic vegetation criterion is met.**

SOIL Sampling Point: **DP-35 (wtd)**

Profile Description: (Describe to the depth needed to document the indicator or confirm the absence of indicators.)

Depth	Matrix		Redox Features					
(inches)	Color (moist)	%	Color (moist)	%	Type[1]	Loc[2]	Texture	Remarks
0-2	10YR 3/1	100	-	-			silt loam	
2-20	10YR 5/3	80	2.5YR 5/8	10	C	M	silty clay loam	
	10YR 3/1	10	-	-				

[1] Type: C=Concentration, D=Depletion, RM=Reduced Matrix, CS=Covered or Coated Sand Grains. [2] Location: PL=Pore Lining, M=Matrix

Hydric Soil Indicators:

- ___ Histosol (A1)
- ___ Histic Epipedon (A2)
- ___ Black Histic (A3)
- ___ Hydrogen Sulfide (A4)
- ___ Stratified Layers (A5)
- ___ 2 cm Much (A10)
- ___ Depleted Below Dark Surface (A11)
- ___ Thick Dark Surface (A12)
- ___ Sandy Mucky Mineral (S1)
- ___ Sandy Gleyed Matrix (S4)
- ___ Sandy Redox (S5)
- ___ Stripped Matrix (S6)
- ___ Loamy Mucky Mineral (F1)
- ___ Loamy Gleyed Matrix (F2)
- ___ Depleted Matrix (F3)
- ___ Redox Dark Surface (F6)
- ___ Depleted Dark Surface (F7)
- ___ Redox Depressions (F8)

Indicators for Problematic Hydric Soils[3]:

- ___ Coast Prairie Redox (A16) **(LRR,K,L,R)**
- ___ Dark Surface (S7) **(LRR,K,L)**
- ___ 5 cm mucky peat or peat (S3) **(LRR,K,L)**
- ___ Iron-Manganese Masses (F12) **(LRR,K,L,R)**
- ___ Very Shallow Dark Surface (TF12)
- ___ Other (Explain in Remarks)

[3] Indicators of hydrophytic evegetation and wetland hydrology must be present, unless disturbed or problematic.

Restrictive Layer (if observed):

Type: **n/a**

Depth (inches): **n/a**

Hydric Soil Present? **Yes** ___ **No** **X**

Remarks: **Hydric soils have not developed yet. This appears to be a storm water feature that was excavated in an area of non-hydric soils. The criterion is not met.**

HYDROLOGY

Wetland Hydrology Indicators:

Primary Indicators (minimum of one is required; check all that apply)

- ___ Surface Water (A1)
- ___ High Water Table (A2)
- **X** Saturation (A3)
- ___ Water Marks (B1)
- ___ Sediment Deposits (B2)
- ___ Drift Deposits (B3)
- ___ Algal Mat or Crust (B4)
- ___ Iron Deposits (B5)
- ___ Inundation Visible on Aerial Imagery (B7)
- ___ Sparsely Vegetated Concave Surface (B8)
- ___ Water-Stained Leaves (B9)
- ___ Aquatic Fauna (B13)
- ___ True Aquatic Plants (B14)
- ___ Hydrogen Sulfide Odor (C1)
- ___ Oxidized Rhizospheres on Living Roots (C3)
- ___ Presence of Reduced Iron (C4)
- ___ Recent Iron Reduction in Tilled Soils (C6)
- ___ Thin Muck Surface (C7)
- ___ Gauge or Well Data (D9)
- ___ Other (Explain in Remarks)

Secondary Indicators (minimum of two required)

- ___ Surface Soil Cracks (B6)
- ___ Drainage Patterns (B10)
- **X** Dry-Season Water Table (C2)
- ___ Crayfish Burrows (C8)
- **X** Saturation Visible on Aerial Imagery (C9)
- ___ Stunted or Stressed Plants (D1)
- **X** Geomorphic Position (D2)
- **X** FAC-Neutral Test (D5)

Field Observations:

Surface Water Present?	Yes ___	No **X**	Depth (inches):	
Water Table Present?	Yes **X**	No ___	Depth (inches):	**14**
Saturation Present? (includes capillary fringe)	Yes **X**	No ___	Depth (inches):	**0**

Wetland Hydrology Present? **Yes** **X** **No** ___

Describe Recorded Data (stream gauge, monitoring well, aerial photos, previous inspections), if available:

Local WETS table, NOAA's AHPS map, NRCS Soils Map, recent aerial photos

Remarks: **The water table is present at 14" with saturation at the surface. Multiple secondary hydrology indicators are present as well. The criterion is met.**

State of Wisconsin
DEPARTMENT OF NATURAL RESOURCES
Oshkosh Service Center
625 E County Road Y, Suite 700
Oshkosh, WI 54901-9731

Scott Walker, Governor
Cathy Stepp, Secretary
Telephone 608-266-2621
Toll Free 1-888-936-7463
TTY Access via relay - 711

January 23, 2015 INF-SE-2015-30-00123

CMA, Inc.
Jonah Hetland
4015 80th Street
Kenosha, WI 53142

RE: Jurisdictional status of wetlands located in the 2nd Addendum To Creekside Crossing Condominium plat, also described as being located in the SW1/4 of the SE1/4 of Section 15, Township 1 North, Range 22 East, Village of Pleasant Prairie, Kenosha County

Dear Mr. Hetland:

You have requested a WDNR decision about the jurisdictional status of wetlands located at the above mentioned site. We have reviewed the following information to make this determination:

- Approved 2003 Wetland Delineation Report completed by Hey and Associates, Inc.
- Approved 2004 Erosion Control Plans developed for the proposed Creekside Crossings Project
- Approved 2004 WDNR Grading Permit for the proposed Creekside Crossing Subdivision
- Approved 2004 U.S. Army Corps of Engineers Permit to discharge fill material into wetlands for the proposed Creekside Crossing Subdivision
- 2014 Wetland Delineation Report completed by R.A. Smith National, Inc.
- 2015 Correspondence from the Village of Pleasant Prairie indicating the site was still under active construction until April of 2010.
- Aerial Photography available on Kenosha County Interactive Mapping Website
- Aerial Photography available on WDNR Interactive Mapping Website (Surface Water Data Viewer)
- Aerial Photography available on TerraServer.com

The reviewed information indicates that many of the wetlands identified during the 2014 wetland delineation are a result of construction practices that took place on-site. Construction practices were initiated sometime between 2005 and 2008, and according to information provided by the Village of Pleasant Prairie, were completed in April of 2010.

WDNR has made the determination that on-site construction activities have not been abandoned for a long enough period of time take jurisdictional authority over the following wetlands:

- W-1, W-2, W-4, W-8, W-9, W-11, W-12, W-13, W-14, and W-15

At this time, the wetland features listed above <u>are not</u> subject to state wetland regulations. These wetland features may become subject to state wetland regulations if they continue to persist in subsequent years.

WDNR has the made the determination that the following wetlands are part of an approved stormwater management plan, and are exempt from state wetland regulations:

- SW Pond 1, SW Pond 2, and W-3

The wetland features listed above <u>are not</u> subject to state wetland regulations. These wetland features may become subject to state wetland regulations if they are not actively maintained and continue to persist in subsequent years.

WDNR has made the determination that the following wetlands were not a result of the construction practices that occurred on-site:

- W-6 (and associated tributary), W-7, and W-10.

The wetlands listed above <u>are</u> subject to state wetland and waterway regulations.

A determination for W-5 cannot be made until a field review is conducted this spring. **We recommend avoiding construction activities in this wetland until a final jurisdictional decision is made**.

In addition to contacting WDNR, be sure to contact your local zoning office and U.S. Army Corps of Engineers to determine if any local or federal permits may be required for your project. **We strongly recommend that you request a U.S. Army Corps of Engineers jurisdictional determination for the site's wetland features**. The U.S. Army Corps of Engineers contact for Kenosha County is Marie Kopka. Ms. Kopka can be reached at (651) 290-5856.

If you have any questions, please contact me at (920) 303-5439 or email thomas.nedland@wisconsin.gov.

Sincerely,

Tom Nedland
Wetland Identification Coordinator

cc: Marie Kopka, U.S. Army Corps of Engineers
Todd Vesperman, U.S. Army Corps of Engineers
Jean Werbie-Harris, Village of Pleasant Prairie
Elaine Johnson, DNR
Pam Biersach, DNR

Quality Customer Service is Important to Us. Tell Us How We Are Doing.
Water Division Customer Service Survey
https://www.surveymonkey.com/s/WDNRWater

WETLAND BOUNDARY MAP

Located on Creekside Circle, in the Village of Pleasant Prairie, Kenosha County, Wisconsin.

Part of the Southwest 1/4 and Southeast 1/4 of Section 15, Township 1 North, Range 22 East, in the Village of Pleasant Prairie, Kenosha County, Wisconsin.

November 25, 2014 Survey No.166223-BMJ

R.A. Smith National, Inc.

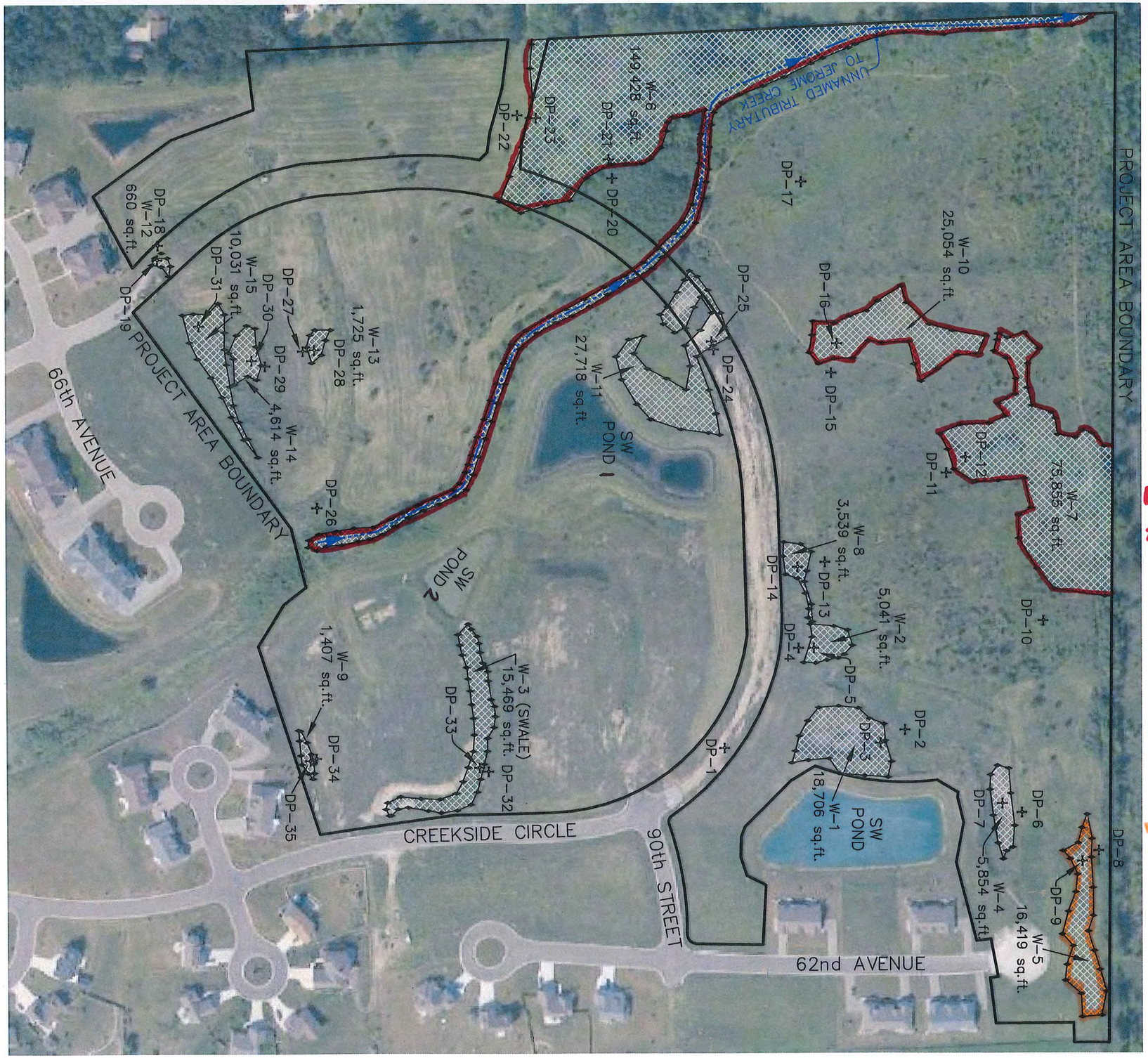

0 200 400 Feet

GRAPHIC SCALE

Red outline wetland subject to State Regulation W-6, W-7, W-10

LEGEND

- DP-1 ✛ DATA POINT
- WETLAND AREA
- WETLAND BOUNDARY
- PROJECT AREA BOUNDARY

Orange Outline Requires field visit to determine jurisdictional status W-5

*All other wetlands are not subject to state wetland regulations.

FIGURE 2.
WETLAND BOUNDARY MAP

R.A. Smith National, Inc.

Beyond Surveying and Engineering

16745 W. Bluemound Road, Brookfield WI 53005
262-781-1000 Fax 262-797-7373 www.rasmithnational.com
Appleton, WI Orange County, CA Pittsburgh, PA

S:\5166223\dwg\WX101B.dwg\CREEKSIDE CIR

DEPARTMENT OF THE ARMY
ST. PAUL DISTRICT, CORPS OF ENGINEERS
180 FIFTH STREET EAST, SUITE 700
ST. PAUL MN 55101-1678

REPLY TO
ATTENTION OF
Operations
Regulatory (2015-00262-MHK)

April 29, 2015

Mr. Stephen R. Mills
Construction Management Associates, Inc.
4015 80th Street
Kenosha, Wisconsin 53142

Dear Mr. Mills:

This letter is in response to your correspondence submitted requesting jurisdictional determinations and Corps of Engineers (Corps) concurrence with the delineation of aquatic resources completed on the 62.78-acre property located northeast of the Greenbay Road and 93rd Street intersection in the Village of Pleasant Prairie. The project site known, as Creekside Crossing, is located in the SE ¼ of the SE ¼ of Sec. 15, T. 1N., R. 22E., Kenosha County, Wisconsin. The review area for our jurisdictional determination is identified on the attached Figure 2.

We have preliminarily determined that the following resources are waters of the United States and therefore are subject to Corps of Engineers jurisdiction: unnamed tributary to Jerome Creek, Wetland 6, 7 and 10. Pursuant to Section 404 of the Clean Water Act, the Corps of Engineers has regulatory jurisdiction over the discharge of dredged and fill materials in waters of the United States.

The enclosed preliminary jurisdictional determination (JD) presumes that the unnamed tributary to Jerome Creek, Wetland 6, 7 and 10 are subject to Corps of Engineers' jurisdiction under the Clean Water Act. Since the determination is considered preliminary it is not appealable under our administrative appeal procedures (33 CFR 331). If you prefer an appealable approved jurisdictional determination that verifies the jurisdictional status of the aquatic resources you may request one by contacting the Corps representative identified in the final paragraph of this letter.

If this preliminary JD is acceptable, please sign and date the Preliminary Jurisdictional Determination Form and return to: Marie Kopka, U.S. Army Corps of Engineers, 20711 Watertown Road, Suite F, Waukesha, Wisconsin 53186 within 15 days from the date of this letter.

We have determined that the review area also contains aquatic resources that are *not* subject to Corps of Engineers jurisdiction. These aquatic resources include the following: Stormwater Ponds 1 and 2, Wetlands 1 through 5, Wetlands 8 and 9, and Wetlands 11 though 15. You are not required to obtain Department of the Army authorization to discharge dredged or fill material within these fourteen aquatic resources. The rationale for this determination is provided in the attached Approved Jurisdictional Determination forms.

In addition, we have reviewed the Wetland Delineation Report dated December 4, 2015 completed by R.A. Smith National and determined that the limits of the aquatic resources have been accurately identified in accordance with current agency guidance including the *Corps of Engineers Wetland Delineation Manual* (1987 Manual) and the Regional Supplement to the Corps of Engineers Wetland Delineation Manual: Midwest Region. The boundaries shown on Figure 4 accurately reflect the limits of the aquatic resources in the review area. This concurrence is only valid for the review areas shown on the attached Figure 2.

We recommend that the boundaries of the resources identified be surveyed and identified on any development plans prepared for this property.

If you object to the approved jurisdictional determination, you may request an administrative appeal under Corps regulations at 33 CFR 331. Enclosed you will find a Notification of Appeal Process (NAP) fact sheet and Request for Appeal (RFA) form. If you request to appeal this determination, you must submit a completed RFA form to the Mississippi Valley Division Office at the address shown on the form.

In order for an RFA to be accepted by the Corps, the Corps must determine that it is complete, that it meets the criteria for appeal under 33 CFR 331.5, and that it has been received by the Division Office within 60 days of the date of the attached NAP.

It is not necessary to submit an RFA form to the division office if you do not object to the determinations in this letter.

The wetland delineation concurrence and jurisdictional determinations may be relied upon for five years from the date of this letter. However, the Corps reserves the right to review and revise the boundary in response to changing site conditions, information that was not considered during our initial review, or off-site activities that could indirectly alter the extent of wetlands and other resources on-site. These determinations may be renewed at the end of the five year period provided you submit a written request and our staff is able to verify that the approximate location and boundaries of the waters on the property established during the original determination are still accurate.

Thank you for your cooperation with the U.S. Army Corps of Engineers regulatory program. If you have any questions, please contact me at (651) 290-5733 or Marie.H.Kopka@usace.army.mil. In any correspondence or inquiries, please refer to the Regulatory number shown above.

Sincerely,

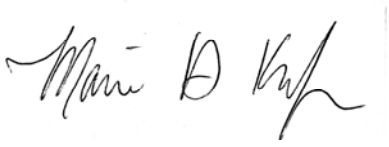

Marie H. Kopka
Senior Project Manager, Regulatory Branch

Enclosures

Electronic copy furnished (w/enclosure Figure 2):
Jonah Hetland, Construction Management Associates, Inc.
Geri Radermacher and Tom Nedland, Wisconsin DNR
Heather Patti, RA Smith National

WETLAND BOUNDARY MAP

Located on Creekside Circle, in the Village of Pleasant Prairie, Kenosha County, Wisconsin.

Part of the Southwest 1/4 and Southeast 1/4 of Section 15, Township 1 North, Range 22 East, in the Village of Pleasant Prairie, Kenosha County, Wisconsin.

November 25, 2014 Survey No.166223-BMJ

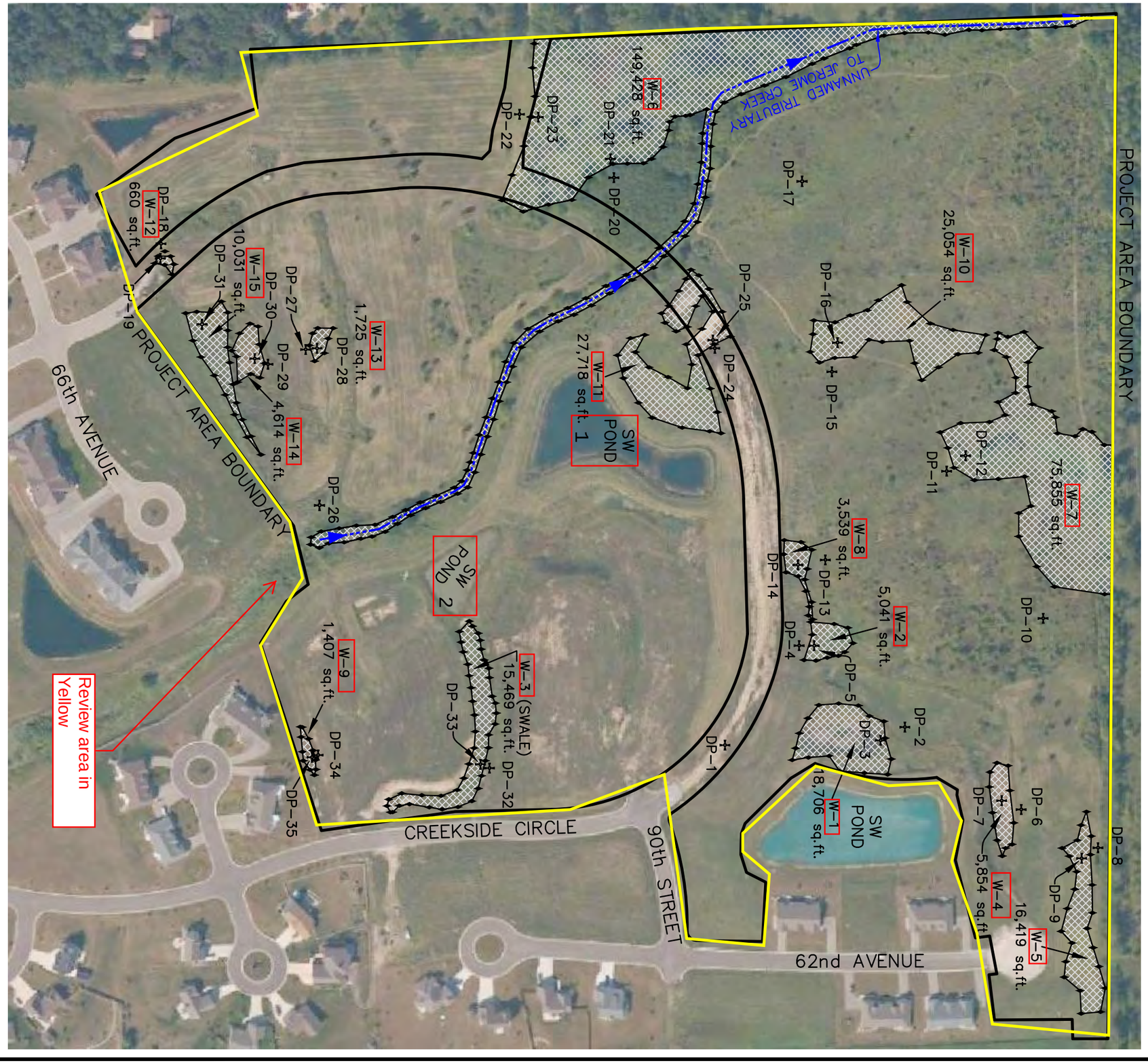

0 200 400 Feet

GRAPHIC SCALE

LEGEND

- DP-1 DATA POINT
- WETLAND AREA
- WETLAND BOUNDARY
- PROJECT AREA BOUNDARY

FIGURE 2.
WETLAND BOUNDARY MAP

R.A. Smith National, Inc.

Beyond Surveying and Engineering

16745 W. Bluemound Road, Brookfield WI 53005
262-781-1000 Fax 262-797-7373 www.rasmithnational.com
Appleton, WI Orange County, CA Pittsburgh, PA

S:\5166223\dwg\WX101B.dwg\CREEKSIDE CIR

SHEET 1 OF 1

R.A. Smith National, Inc.

MVP-2015-00262-MHK

NOTIFICATION OF ADMINISTRATIVE APPEAL OPTIONS AND PROCESS AND REQUEST FOR APPEAL			
Applicant:Construction Management Associates, Inc.		File Number: 2015-00262-MHK	Date:29 Apr 2015
Attached is:			See Section below
	INITIAL PROFFERED PERMIT (Standard Permit or Letter of Permission)		A
	PROFFERED PERMIT (Standard Permit or Letter of Permission)		B
	PERMIT DENIAL		C
X	APPROVED JURISDICTIONAL DETERMINATION		D
X	PRELIMINARY JURISDICTIONAL DETERMINATION		E

SECTION I - The following identifies your rights and options regarding an administrative appeal of the above decision. Additional information may be found at http://www.usace.army.mil/cecw/pages/reg_materials.aspx or Corps regulations at 33 CFR Part 331.

A. INITIAL PROFFERED PERMIT: You may accept or object to the permit.

• **ACCEPT**: If you received a Standard Permit, you may sign the permit document and return it to the district engineer for final authorization. If you received a Letter of Permission (LOP), you may accept the LOP and your work is authorized. Your signature on the Standard Permit or acceptance of the LOP means that you accept the permit in its entirety, and waive all rights to appeal the permit, including its terms and conditions, and approve jurisdictional determinations associated with the permit.

• **OBJECT**: If you object to the permit (Standard or LOP) because of certain terms and conditions therein, you may request that the permit be modified accordingly. You must complete Section II of this form and return the form to the district engineer. Your objections must be received by the district engineer within 60 days of the date of this notice, or you will forfeit your right to appeal the permit in the future. Upon receipt of your letter, the district engineer will evaluate your objections and may: (a) modify the permit to address all of your concerns, (b) modify the permit to address some of your objections, or (c) not modify the permit having determined that the permit should be issued as previously written. After evaluating your objections, the district engineer will send you a proffered permit for your reconsideration, as indicated in Section B below.

B. .PROFFERED PERMIT: You may accept or appeal the permit.

• **ACCEPT**: If you received a Standard Permit, you may sign the permit document and return it to the district engineer for final authorization. If you received a Letter of Permission (LOP), you may accept the LOP and your work is authorized. Your signature on the Standard Permit or acceptance of the LOP means that you accept the permit in its entirety, and waive all rights to appeal the permit, including its terms and conditions, and approved jurisdictional determinations associated with the permit.

• **APPEAL**: If you choose to decline the proffered permit (Standard or LOP) because of certain terms and conditions therein, you may appeal the declined permit under the Corps of Engineers Administrative Appeal Process by completing Section II of this form and sending the form to the division engineer. This form must be received by the division engineer within 60 days of the date of this notice.

C. PERMIT DENIAL: You may appeal the denial of a permit under the Corps of Engineers Administrative Appeal Process by completing Section II of this form and sending the form to the division engineer. This form must be received by the division engineer within 60 days of the date of this notice.

D. APPROVED JURISDICTIONAL DETERMINATION: You may accept or appeal the approved JD or provide new information.

• **ACCEPT**: You do not need to notify the Corps to accept an approved JD. Failure to notify the Corps within 60 days of the date of this notice, means that you accept the approved JD in its entirety, and waive all rights to appeal the approved JD.

• **APPEAL**: If you disagree with the approved JD, you may appeal the approved JD under the Corps of Engineers Administrative Appeal Process by completing Section II of this form and sending the form to the division engineer. This form must be received by the division engineer within 60 days of the date of this notice.

E. PRELIMINARY JURISDICTIONAL DETERMINATION: You do not need to respond to the Corps regarding the preliminary JD. The Preliminary JD is not appealable. If you wish, you may request an approved JD (which may be appealed), by contacting the Corps district for further instruction. Also you may provide new information for further consideration by the Corps to reevaluate the JD.

SECTION II - REQUEST FOR APPEAL or OBJECTIONS TO AN INITIAL PROFFERED PERMIT

REASONS FOR APPEAL OR OBJECTIONS: (Describe your reasons for appealing the decision or your objections to an initial proffered permit in clear concise statements. You may attach additional information to this form to clarify where your reasons or objections are addressed in the administrative record.)

ADDITIONAL INFORMATION: The appeal is limited to a review of the administrative record, the Corps memorandum for the record of the appeal conference or meeting, and any supplemental information that the review officer has determined is needed to clarify the administrative record. Neither the appellant nor the Corps may add new information or analyses to the record. However, you may provide additional information to clarify the location of information that is already in the administrative record.

POINT OF CONTACT FOR QUESTIONS OR INFORMATION

If you have questions regarding this decision and/or the appeal process you may contact:

Marie Kopka
U. S. Army Corps of Engineers, Regulatory Branch
20711 Watertown Road, Suite F
Waukesha, Wisconsin 53186

Telephone (651) 290-5733

If you only have questions regarding the appeal process you may also contact:

Administrative Appeals Review Officer
Mississippi Valley Division
P.O. Box 80 (1400 Walnut Street)
Vicksburg, MS 39181-0080
(601) 634-5820
(601) 634-5816 (fax)

RIGHT OF ENTRY: Your signature below grants the right of entry to Corps of Engineers personnel, and any government consultants, to conduct investigations of the project site during the course of the appeal process. You will be provided a 15 day notice of any site investigation, and will have the opportunity to participate in all site investigations.

_____ Signature of appellant or agent.	Date:	Telephone number:

Filed 6/29 2015 Published 7/10 2015
Public Hearing 8/10 2015
Fee Paid 6/29 2015 Approved _____ 20__
Notices Mailed 7/10 2015 Denied _____ 20__

VILLAGE OF PLEASANT PRAIRIE, WISCONSIN
COMPREHENSIVE PLAN AMENDMENT APPLICATION

To: Village Plan Commission & Village Board of Trustees of the Village of Pleasant Prairie:

I, (We), the undersigned owner(s)/agent do hereby petition the Village Board to amend the Village of Pleasant Prairie Comprehensive Plan as hereinafter requested and affecting the property located at Creekside Circle & 90th Street and

Tax Parcel Number 92-4-222-153-0727, 0728, and 0729.

Check all that apply

☒ Land Use Plan Amendment: To change the land use designation from the Multi-Family (R-8, R-9 and R-10) land use designation to the R - 4.5 (Single Family) and R - 8 (Multi-Family) land use designation.

☒ Neighborhood Plan Amendment for the Whittier Creek Neighborhood

☐ Other Amendment to the Comprehensive Plan (specify) _____

Petitioner's interest in the requested amendment: Owner/Developer

I (We), have contacted the Community Development Department to arrange a pre-application meeting to discuss the proposed request to determine additional information that may be needed for this request.

I, (We), hereby certify that all the above statements and attachments submitted herewith are true and correct to the best of my knowledge.

PROPERTY OWNER:

Print Name: Creekside PP, LLC.
Signature: _____
Address: 4015 80th Street
Kenosha, WI, 53402
(City) (State) (Zip)
Phone: (262) 842-0483
Fax: (262) 842-0449
Email: jonah@bearcommerical.com
Date 6-26-2015

OWNER'S AGENT:

Print Name: Jonah Hetland, Bear Development, LLC.
Signature: _____
Address: 4015 80th Street
Kenosha, WI, 53402
(City) (State) (Zip)
Phone: (262) 842-0483
Fax: (262) 842-0449
Email: jonah@bearcommerical.com
Date: 6-26-2015

RECEIVED
JUN 29 2015
PLEASANT PRAIRIE

Nielsen Madsen & Barber S.C.
Civil Engineers and Land Surveyors

June 29, 2015

Ms. Jean Werbie - Harris
Village of Pleasant Prairie
9915 – 39th Avenue
Pleasant Prairie, WI 53158

RE: Comprehensive Land Use Plan Amendment &
Whittier Creek Neighborhood Plan Update Request
Creekside Terrace Subdivision
File No. 2014.0030.03

Dear Jean:

The following is a brief description of the modifications that are being proposed to the above referenced neighborhood plan to accommodate the proposed Creekside Terrace Subdivision:

1) Eliminating the 91st Place cul-de-sac (East of Creekside Circle).
2) Realigning 89th Street and the un-named Avenue (north of Creekside Circle) to avoid unnecessary wetland and floodplain impacts to the northwest.
3) Shifting of 91st Street (as it heads west towards Old Green Bay Road) further South to avoid additional wetland impacts.
4) Modifying the residential zoning classifications from the current R-8, R-9, R-10 (multi-family condominium) to R-4.5 (64 single family lots) and R-8 (1 two-unit lot).
5) Incorporating a 1+/- acre Public Park to the neighborhood plan (South of Creekside Circle) and modifying the underlying zoning from R-8 to PR-1.
6) Updating the existing floodplain boundary (with more accurate information) and the proposed floodplain "fill" areas.

Please see the enclosed Neighborhood Plan for details and contact my office with any questions you may have.

Sincerely,

Mark D. Eberle, P.E.

ALW

RECEIVED
JUN 29 2015
PLEASANT PRAIRIE

File: 2014 Docs/2014.0030.03/Correspondence/Whittier Creek Neighborhood Modifications

1458 Horizon Blvd, Suite 200, Racine, WI 53406
Ph: (262) 634-5588 * Fax: (262) 634-5024
www.nmbsc.net

Nielsen Madsen & Barber S.C.
Civil Engineers and Land Surveyors

June 29, 2015

Ms. Jean Werbie - Harris
Village of Pleasant Prairie
9915 – 39th Avenue
Pleasant Prairie, WI 53158

RE: Comprehensive Land Use Plan Amendment &
Whittier Creek Neighborhood Plan Update Request
Creekside Terrace Subdivision
File No. 2014.0030.03

Dear Jean:

The following is a brief description of the modifications that are being proposed to the above referenced neighborhood plan to accommodate the proposed Creekside Terrace Subdivision:

1) Eliminating the 91st Place cul-de-sac (East of Creekside Circle).
2) Realigning 89th Street and the un-named Avenue (north of Creekside Circle) to avoid unnecessary wetland and floodplain impacts to the northwest.
3) Shifting of 91st Street (as it heads west towards Old Green Bay Road) further South to avoid additional wetland impacts.
4) Modifying the residential zoning classifications from the current R-8, R-9, R-10 (multi-family condominium) to R-4.5 (64 single family lots) and R-8 (1 two-unit lot).
5) Incorporating a 1+/- acre Public Park to the neighborhood plan (South of Creekside Circle) and modifying the underlying zoning from R-8 to PR-1.
6) Updating the existing floodplain boundary (with more accurate information) and the proposed floodplain “fill” areas.

Please see the enclosed Neighborhood Plan for details and contact my office with any questions you may have.

Sincerely,

Mark D. Eberle, P.E.

ALW

File: 2014 Docs/2014.0030.03/Correspondence/Whittier Creek Neighborhood Modifications

1458 Horizon Blvd, Suite 200, Racine, WI 53406
Ph: (262) 634-5588 * Fax: (262) 634-5024
www.nmbsc.net

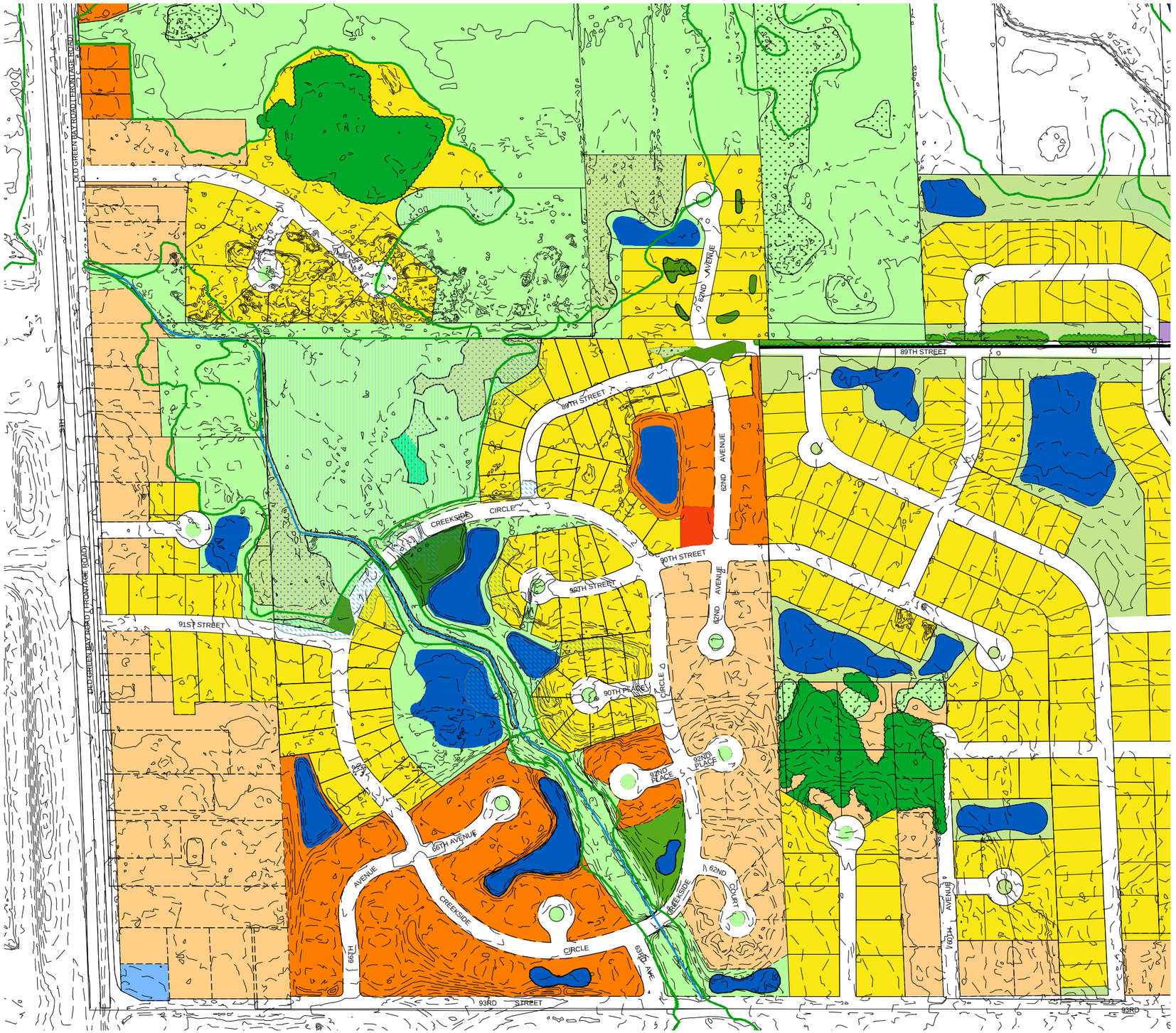

N

400' 200' 0' 200' 400'

SCALE 1"=200'

LAND USES

- EXISTING SINGLE RESIDENTIAL
- INDUSTRIAL
- GOVERNMENT AND INSTITUTIONAL
- OPEN SPACE
- FUTURE SINGLE FAMILY RESIDENTIAL
- COMMERCIAL
- EXISTING MULTI-FAMILY
- FUTURE MULTI-FAMILY
- TRANSPORTATION AND UTILITIES
- PARK LANDS

WATER FEATURES

- STORMWATER MANAGEMENT BASIN
- WETLANDS
- PROPOSED WETLAND FILL
- PROPOSED WETLAND ENHANCEMENT
- STREAMS
- 100-YEAR FLOODPLAIN
- PROPOSED FLOODPLAIN FILL
- PROPOSED NEW FLOODPLAIN

OTHER FEATURES

- EXISTING CONTOURS
- WOODLAND BOUNDARY
- WOODLANDS TO BE PRESERVED
- WOODLANDS TO BE DEVELOPED

BOUNDARY FEATURES

- EXISTING PARCEL LINES
- EXISTING RIGHT-OF-WAY
- PROPOSED PARCEL LINES
- PROPOSED RIGHT-OF-WAY

Nielsen Madsen & Barber S.C.
Civil Engineers and Land Surveyors
1458 Horizon Blvd. Suite 200, Racine, WI. 53406
Tele: (262)634-5588 Fax: (262)634-5024
Website www.nmbsc.net

WHITTIER CREEK
NEIGHBORHOOD PLAN
CREEKSIDE TERRACE
AMENDMENT

VILLAGE OF PLEASANT PRAIRIE, KENOSHA COUNTY, WISCONSIN

NO.	REVISION	BY	DATE

PROJ. MGR:	MDE
DRAFTED:	SCB
DATE:	6-16-15
CHECKED:	MDE
DATE:	6-29-15

2014.0030.03

SHEET 1 OF 1

Monday, June 29, 2015 3:36:49 PM

VILLAGE OF
PLEASANT PRAIRIE

Filed 6/29 2015 Published 7/27 2015
Public Hearing 8/10 2015 8/3 2015
Fee Paid 6/29 2015 Approved ____ 20__
Notices Mailed 7/10 2015 Denied ____ 20__

VILLAGE OF PLEASANT PRAIRIE
CONCEPTUAL PLAN APPLICATION

1. Development Name: Creekside Terrace
2. General Location of Development: Creekside Circle & 90th Street
3. Tax Parcel Number(s): 92-4-122-153-0727, 0728 & 0729
4. Number of Lots: 64 Number of Outlots: 5
5. Size of Development: 62.347 acres.
6. The Development is proposed to be constructed in Phases: ☐ Yes ☒ No
7. The Development abuts or adjoins a State Trunk Highway: ☐ Yes ☒ No
8. The Development abuts or adjoins a County Trunk Highway or a Kenosha County Park or the Kenosha County Bike Trail: ☐ Yes ☒ No
9. The following number and types of plans shall be submitted with this application:
   - 10 full size sets of Conceptual Plan
   - 1 copy of the Conceptual Plan reduced to 11" by 17"
   - Conceptual Plan application fee
   - 10 sets of Conceptual Engineering Plan
   - Phasing Plan, if applicable
   - Draft of Declarations, Covenant, Restrictions and any Easement Documents
   - Any other information as specified by the Village

I, (We), hereby certify that all the above statements and attachments submitted herewith are true and correct to the best of my knowledge.

PROPERTY OWNER:

Print Name: Creekside PP, LLC.
Signature: _____
Address: 4015 80th Street
Kenosha (City) WI (State) 53142 (Zip)
Phone: 262-842-0483
Fax: 262-842-0449
Date 6-26-2015

OWNER'S AGENT:

Print Name: Jonah Hetland, Bear Development, LLC.
Signature: _____
Address: 4015 80th Street
Kenosha (City) WI (State) 53142 (Zip)
Phone: 262-842-0483
Fax: 262-842-0449
Date: 6-26-2015

RECEIVED
JUN 29 2015
PLEASANT PRAIRIE

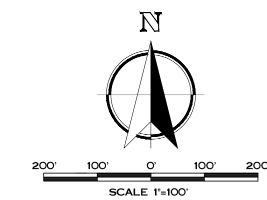

LEGAL DESCRIPTION:

Outlots 7, 8 and 9 of Creekside Crossing Addition No. 1, a subdivision recorded in the Office of the Register of Deeds of Kenosha County, Wisconsin on July 18, 2007 as Document No. 1527619, being a redivision of a part of Outlot 4 and all of Outlot 2 of Creekside Crossing subdivision, located in a part of the Northeast ¼ and Southeast ¼ of the Southwest ¼ and the Northwest ¼ and Southwest ¼ of the Southeast ¼ of Section 15, Town 1 North, Range 22 East, in the Village of Pleasant Prairie, Kenosha County, Wisconsin.

EXCEPTING THEREFROM THE FOLLOWING:

Being a part of Outlot 7, "Creekside Crossing Addition No. 1 " Subdivision, recorded in the office of the Register of Deeds for Kenosha County on July 18, 2007 as Document No. 1527619, being a Subdivision of a part of the Northeast ¼ and Southeast ¼ of the Southwest ¼ and the Northwest ¼ and Southwest ¼ of the Southeast ¼ of Section 15, Town 1 North, Range 22 East, in the Village of Pleasant Prairie, Kenosha County, Wisconsin, now being more particularly bounded and described as follows:

Commencing at the Southwest corner of the said Southeast ¼ Section; Thence South 89°59'36" East and along the South line of the said Southeast ¼ Section, 663.61 feet to a point; Thence North 02°39'37" West and along the East line of the West ½ of the West ½ of the said Southeast ¼ Section, 1855.44 feet to the place of beginning of lands hereinafter described;

Thence North 89°55'18" West, 142.15 feet to a point of curvature; Thence Northwesterly 24.21 feet along the arc of a curve, whose center lies to the Northeast, whose radius is 15.00 feet, whose central angle is 92°27'50", and whose chord bears North 43°41'23" West, 21.66 feet to a point of reverse curvature; Thence Northeasterly 390.67 feet along the arc of a curve, whose center lies to the Northwest, whose radius is 7533.00 feet, whose central angle is 02°58'17", and whose chord bears North 01°03'23.5" East, 390.63 feet to a point of tangency; Thence North 00°25'45" West, 77.54 feet to a point of curvature; Thence Northwesterly 99.26 feet along the arc of a curve, whose center lies to the Southwest, whose radius is 633.00 feet, whose central angle is 08°59'03", and whose chord bears North 04°55'16.5" West, 99.15 feet to a point; Thence North 82°26'38" East, 97.13 feet to a point; Thence North 02°39'37" West, 155.80 feet to a point; Thence South 89°41'39" East, 35.05 feet to a point on the said East line of the said West ½ of the said West ½ of the said Southeast ¼ Section; Thence South 02°39'37" East and along the said East line of the said West ½ of the said West ½, 751.78 feet to the point of beginning of this description.

AND ALSO EXCEPTING THEREFROM THE FOLLOWING:

Being a part of Outlot 7, "Creekside Crossing Addition No. 1 " Subdivision, recorded in the office of the Register of Deeds for Kenosha County on July 18, 2007 as Document No. 1527619, being a Subdivision of a part of the Northeast ¼ and Southeast ¼ of the Southwest ¼ and the Northwest ¼ and Southwest ¼ of the Southeast ¼ of Section 15, Town 1 North, Range 22 East, in the Village of Pleasant Prairie, Kenosha County, Wisconsin, now being more particularly bounded and described as follows:

Commencing at the Southwest corner of the said Southeast ¼ Section; Thence South 89°59'36" East and along the South line of the said Southeast ¼ Section, 663.61 feet to a point; Thence North 02°39'37" West and along the East line of the West ½ of the West ½ of the said Southeast ¼ Section, 2607.22 feet to a point; Thence North 89°41'39" West, 35.05 feet to a point; Thence South 02°39'37" East, 155.80 feet to a point; Thence South 82°26'38" West, 97.13 feet to a point; Thence Northwesterly 13.05 feet along the arc of a curve, whose center lies to the Southwest, whose radius is 633.00 feet, whose central angle is 01°10'52", and whose chord bears North 10°00'14" West, 13.05 feet to a point; Thence South 79°24'20" West, 66.00 feet to a point; Thence Southeasterly 24.97 feet along the arc of a curve, whose center lies to the Southwest, whose radius is 567.00 feet, whose central angle is 02°31'22", and whose chord bears South 09°19'59" East, 24.96 feet to the place of beginning of lands hereinafter described;

Continuing thence Southeasterly 75.63 feet along the arc of a curve, whose center lies to the Southwest, whose radius is 567.00 feet, whose central angle is 07°38'33", and whose chord bears South 04°15'01.5" East, 75.57 feet to a point of tangency; Thence South 00°25'45" East, 77.54 feet to a point of curvature; Thence Southwesterly 260.49 feet along the arc of a curve, whose center lies to the Northwest, whose radius is 7467.00 feet, whose central angle is 01°59'56", and whose chord bears South 00°34'13" West, 260.48 feet to a point; Thence North 86°35'40" West, 124.28 feet to a point; Thence South 12°44'49" West, 38.23 feet to a point; Thence South 67°49'16" West, 50.27 feet to a point; Thence North 75°58'16" West, 47.99 feet to a point; Thence North 44°39'27" West, 107.27 feet to a point; Thence North 43°55'46" West, 41.01 feet to a point; Thence North 29°40'13" West, 45.92 feet to a point; Thence North 19°07'12" East, 100.11 feet to a point; Thence North 04°58'56" East, 39.90 feet to a point; Thence North 06°50'11" West, 93.79 feet to a point; Thence North 34°19'22" East, 44.17 feet to a point; Thence North 79°40'01" East, 64.60 feet to a point; Thence South 83°34'59" East, 77.27 feet to a point; Thence North 76°30'06" East, 162.76 feet to the point of beginning of this description.

FORMERLY KNOWN AS:

A part of Outlot 7 and all of Outlots 8 and 9 of Creekside Crossing Addition No. 1, a subdivision recorded in the Office of the Register of Deeds of Kenosha County, Wisconsin on July 18, 2007 as Document No. 1527619, composed of the lands described as Outlots 1, 2 and 3 of the 2nd Addendum to Condominium Plat of Creekside Crossing Condominium recorded in the Office of the Register of Deeds of Kenosha County, Wisconsin on December 19, 2007 as Document No. 1542828.

NOTE: Address: Creekside Circle
Tax Key No's.: 92-4-122-153-0727 (Outlot 7); 92-4-122-153-0728 (Outlot 8) and 92-4-122-153-0729 (Outlot 9)

ZONING NOTE

Current Property Zoning is R-8, R-9 and R-10 (UHO), FPO and C-1. The proposed zoning will be R-8, R-4.5, FPO and C-1.

PROPERTY INFORMATION

Concept Plan for Proposed Divisions -of the- PREMISES KNOWN AS:

TAX KEY NO. 92-4-122-153-0727
TAX KEY NO. 92-4-122-153-0728
TAX KEY NO. 92-4-122-153-0729
- * -
SE1/4 Section 15-1-22
VILLAGE OF PLEASANT PRAIRIE
KENOSHA COUNTY, WIS.
- * -
DEVELOPER
Bear Development, LLC.
4011 80th Street, Kenosha, WI 53142
- * -
OWNER
Creekside PP, LLC.
4011 80th Street, Kenosha, WI 53142

WETLAND NOTE

The wetlands were delineated by Heather Patti of R.A. Smith National, Inc. between October 13, 2014 and October 24, 2014.

(A) *DEDICATED 20' WIDE STORMWATER DRAINAGE, ACCESS AND MAINTENANCE EASEMENT*

LEGEND

- Proposed 100yr Floodplain Boundary
- Delineated Wetlands
- Proposed Wetland Enhancement
- Proposed Wetland Fill

RESIDENTIAL LOT DATA

LOT NO.	AREA	FRONTAGE
1	12770	209.36
2	12005	83.80
3	12030	97.98
4	18053	57.15
5	19137	53.97
6	12632	60.32
7	14959	57.45
8	13612	91.58
9	15155	80.11
10	19236	275.55
11	17867	268.64
12	16751	80.00
13	15172	80.00
14	13875	80.00
15	16101	91.71
16	13981	55.98
17	13965	67.21
18	17239	67.17
19	15124	112.31
20	17132	92.01
21	15649	94.05
22	17508	301.22
23	16624	180.9
24	12513	102.24
25	19789	90.39
26	20189	90.38
27	16510	229.39
28	13519	105.78
29	14903	175.82
30	16510	85.01
31	21192	85.29
32	19039	90.21
33	13696	123.12
34	12777	93.02
35	14823	78.68
36	17537	232.63
37	12506	97.03
38	12500	81.39
39	14600	78.99
40	17546	80.18
41	20406	80.02
42	17354	82.35
43	18960	82.64
44	15647	94.33
45	17253	84.42
46	17219	258.30
47	15675	152.44
48	16055	102.34
49	15119	102.38
50	14768	92.56
51	13863	86.94
52	14520	107.48
53	14778	102.55
54	14186	101.63
55	12900	79.22
56	14043	79.97
57	15344	113.84
58	15161	93.58
59	14552	101.47
60	20677	90.00
61	21430	90.00
62	20825	90.00
63	15964	233.51
64	18148	111.43

TOTAL LOT AREA: 1,021,573 SF

OUTLOT NO.	AREA	FRONTAGE
OUTLOT 1	15970	162.68
OUTLOT 2	5474	45.04
OUTLOT 3	827558	1068.11
OUTLOT 4	96000	319.26
OUTLOT 5	827558	683.96

TOTAL DEVELOPED AREA: 2,794,133 SF

BEARING BASE: GRID NORTH, WISCONSIN COORDINATE SYSTEM, SOUTH ZONE. BASED UPON NAD 1927.

DIGGERS HOTLINE
Call 811 or (800) 242-8511
www.DiggersHotline.com

UTILITY NOTE:

EXISTING UTILITIES ARE SHOWN FOR INFORMATIONAL PURPOSES ONLY AND ARE NOT GUARANTEED TO BE ACCURATE OR ALL INCLUSIVE. CONTRACTOR IS RESPONSIBLE FOR VERIFYING THE TYPE, LOCATION, SIZE AND ELEVATION OF UNDERGROUND UTILITIES AS THEY DEEM NECESSARY FOR PROPOSED UTILITY CONNECTIONS AND / OR TO AVOID DAMAGE THERETO. CONTRACTOR SHALL CALL "DIGGER'S HOTLINE" PRIOR TO ANY CONSTRUCTION.

CREEKSIDE TERRACE - ADJOINING LAND OWNER INFORMATION

TAX PARCEL ID NO.	PROPERTY OWNER'S NAME	STREET ADDRESS	CITY, STATE, ZIP CODE
92-4-122-151-0150	Harry Crow	1911 N HI MOUNT BLVD	Milwaukee, WI, 53208
92-4-122-152-0180	William F. Norton	1033 115th Street	Pleasant Prairie, WI, 53158
92-4-122-153-0020	Uttech Tower Land LLC	3707 77th Street	Kenosha, WI, 53142
92-4-122-153-0046	Martin & Pauline Govea	8961 Old Green Bay Rd.	Pleasant Prairie, WI, 53158
92-4-122-153-0050	Village of Pleasant Prairie	9915 39th Avenue	Pleasant Prairie, WI, 53158
92-4-122-222-0100	Village of Pleasant Prairie	9915 39th Avenue	Pleasant Prairie, WI, 53158
92-4-122-153-0060	Julie A. Lamminen	9021 Old Green Bay Rd.	Pleasant Prairie, WI, 53158
92-4-122-153-0092	Oechler Family Trust	1450 95th Avenue	Kenosha, WI, 53144
92-4-122-153-0101	Eric & Deborah Davidson	9115 Old Green Bay Rd.	Pleasant Prairie, WI, 53158
92-4-122-154-0711	Timothy & Michelle Plemmons	9002 62nd Avenue	Pleasant Prairie, WI, 53158
92-4-122-154-0712	Mevlude Bektesi	9026 62nd Avenue	Pleasant Prairie, WI, 53159
92-4-122-154-0713	Muhamet & Sadbere Hamdiu	9050 62 Avenue	Pleasant Prairie, WI, 53158
92-4-122-154-0714	Terry & Tracey Nixon	9074 62nd Avenue	Pleasant Prairie, WI, 53158
92-4-122-154-0715	Ronald & Elsie Hale	9098 62nd Avenue	Pleasant Prairie, WI, 53158
92-4-122-153-1631 - 1652	Creekside Crossing Condominium Assoc.	9262 64th Court	Pleasant Prairie, WI, 53158
92-4-122-153-1471 - 1502	Creekside Crossing Condominium Assoc.	9263 64th Court	Pleasant Prairie, WI, 53158
92-4-122-153-1051 - 1104	Creekside Crossing Condominium Assoc.	9264 64th Court	Pleasant Prairie, WI, 53158
92-4-122-153-1111 - 1202	Creekside Crossing Condominium Assoc.	9265 64th Court	Pleasant Prairie, WI, 53158
92-4-122-154-0130	Hugh P. Tyson	6110 93rd Street	Pleasant Prairie, WI, 53158
92-4-122-151-0100	Glenn & Theresa Michaelis	6109 85th Street	Pleasant Prairie, WI, 53158

Nielsen Madsen & Barber S.C.
Civil Engineers and Land Surveyors
1458 Horizon Blvd. Suite 200, Racine, WI. 53406
Tele: (262)634-5588 Fax: (262)634-5024
Website www.nmbsc.net

CREEKSIDE TERRACE SUBDIVISION
CONCEPTUAL PLAN
FOR
CREEKSIDE PP, LLC
VILLAGE OF PLEASANT PRAIRIE, KENOSHA COUNTY WISCONSIN

NO.	REVISION	BY	DATE

PROJ. MGR.: MDE
DRAFTED: SCB
DATE: 6-26-15
CHECKED: MDE
DATE: 6-29-15

2014.0030.02
SHEET 1 OF 1

VILLAGE OF
PLEASANT
PRAIRIE

Filed 6/29 20 15
Fee Paid 6/29 20 15
PC Meeting Date 8/10 20 15
VB Meeting Date 8/17 20 15
Approved _____ 20__
Denied _____ 20__

VILLAGE OF PLEASANT PRAIRIE
CERTIFIED SURVEY MAP APPLICATION

To: Village Plan Commission & Village Board of Trustees of the Village of Pleasant Prairie:

I, (We), the undersigned owner(s)/agent do hereby petition the Village Board to amend the Village of Pleasant Prairie Zoning Map as hereinafter requested.

It is petitioned that the following described property be subdivided with a Certified Survey Map (CSM)

The property petitioned to be subdivided is located at: NW Corner of 90th Street & 62nd Avenue

and is legally described as follows: SE most .453 Acres of Outlot 1, Creekside Crossing Subdivision.

Tax Parcel Number(s): 92-4-122-153-0727

The property abuts or adjoins a State Trunk Highway	☐ Yes	☒ No
The property abuts or adjoins a County Trunk Highway	☐ Yes	☒ No
Municipal Sanitary Sewer is available to service said properties	☒ Yes	☐ No
Municipal Water is available to service said properties	☒ Yes	☐ No

I (We), have contacted the Community Development Department to arrange a pre-application meeting to discuss the proposed request with the Village staff to determine additional information that may be needed to consider the request.

I, (We), hereby certify that all the above statements and attachments submitted herewith are true and correct to the best of my knowledge.

PROPERTY OWNER:

Print Name: Creekside PP, LLC.
Signature: _____
Address: 4015 80th Street
Kenosha, WI, 53142
(City) (State) (Zip)
Phone: (262) 842-0483
Fax: (262) 842-0449
Date 6-26-2015

OWNER'S AGENT:

Print Name: Jonah Hetland, Bear Development, LLC.
Signature: _____
Address: 4015 80th Street
Kenosha, WI, 53142
(City) (State) (Zip)
Phone: (262) 842-0483
Fax: (262) 842-0449
Date: 6-26-2015

RECEIVED
JUN 29 2015
PLEASANT PRAIRIE

CERTIFIED SURVEY MAP NO. _____

A RE-DIVISION OF OUTLOT 7 OF CREEKSIDE CROSSING ADDTION No. 1, BEING PART OF THE NORTHWEST 1/4 OF THE SOUTHEAST 1/4 OF SECTION 15, TOWNSHIP 1 NORTH, RANGE 22 EAST, IN THE VILLAGE OF PLEASANT PRAIRIE, KENOSHA COUNTY, WISCONSIN.

Curve Table							
Curve #	Delta	Radius	Arc	Tangent	Chord Direction	Chord Length	Tangent Bearing
C1	1°00'23"	7467.00	131.15	65.58	S02° 04' 22"W	131.15	S02°34'33"W S01°34'10"W
C2	85°58'14"	15.00	22.51	13.98	S45° 33' 40"W	20.45	S88°32'47"W S02°34'33"W
C3	9°33'04"	683.00	113.86	57.06	S83° 46' 15"W	113.72	S88°32'47"W S78°59'43"W

(1) DEDICATED VISION TRIANGLE EASEMENT IN COMPLIANCE WITH VILLAGE ORDINANCE ILLUSTRATION #2 (SEC. 12.13-1). (PER SEPARATE DOCUMENT)

LOCATION MAP
SE 1/4 OF SECTION 15-1-22

WISCONSIN
MARK R. MADSEN
S-2271
RACINE, WI
LAND SURVEYOR
6-26-15

NOTES:

ZONING OF PARCEL IS R-8

OWNER/LAND DIVIDER: CREEKSIDE PP, LLC
4011 80TH ST. KENOSHA, WI 53142

SURVEYOR: NIELSEN MADSEN & BARBER, S.C.
1458 HORIZON BLVD. SUITE 200, RACINE, WI 53406

ALL ELEVATIONS REFER TO NATIONAL GEODETIC DATUM OF 1929.

BEARINGS BASE: GRID NORTH, WISCONSIN COORDINATE SYSTEM, SOUTH ZONE. BASED UPON NAD 1927.

LEGEND:

- ○ 1" O.D. IRON PIPE FOUND
- ● 1.315" O.D.x18" IP - 1.68LBS/LIN FT. SET
- ⊕ 6" CONC. MON. W / BRASS CAP FOUND

Date: June 26, 2015
This Instrument was drafted by Mark R. Madsen
PROJECT ID: 2014.0030.04

CERTIFIED SURVEY MAP NO. _____

A RE-DIVISION OF OUTLOT 7 OF CREEKSIDE CROSSING ADDTION No. 1, BEING PART OF THE NORTHWEST 1/4 OF THE SOUTHEAST 1/4 OF SECTION 15, TOWNSHIP 1 NORTH, RANGE 22 EAST, IN THE VILLAGE OF PLEASANT PRAIRIE, KENOSHA COUNTY, WISCONSIN.

SURVEYOR'S CERTIFICATE

I, MARK R. MADSEN, Professional Land Surveyor, hereby certify:
THAT I have prepared this Certified Survey Map at the direction of the OWNER / LAND DIVIDER; THAT the exterior boundaries are described as being a part of Outlot 7, "Creekside Crossing Addition No. 1" Subdivision, recorded in the office of the Register of Deeds for Kenosha County on July 18, 2007 as Document No. 1527619, being a Subdivision of a part of the Northeast ¼ and Southeast ¼ of the Southwest ¼ and the Northwest ¼ and Southwest ¼ of the Southeast ¼ of Section 15, Town 1 North, Range 22 East, in the Village of Pleasant Prairie, Kenosha County, Wisconsin, now being more particularly bounded and described as follows: Commencing at the Southwest corner of the said Southeast ¼ Section; thence N02°39'47"W 1828.61 feet along the North-South ¼ line of said Section; thence N87°20'14"E 311.85 feet to the point of beginning of this description; run thence N00°02'34"W 127.82 feet; thence N12°44'49"E 38.23 feet; thence S86°35'40"E 124.28 feet to the Westerly right-of-way of 62nd Avenue and a point on a curve of Easterly convexity whose radius is 7467.00 feet and whose chord bears S02°04'22"W 131.15 feet; thence Southerly along the arc of said curve and said Westerly right-of-way 131.15 feet to the Northerly right-of-way of 90th Street and a point on a curve of Southeasterly convexity whose radius is 15.00 feet and whose chord bears S45°33'40"W 20.45 feet; thence Southwesterly along the arc of said curve and said Northerly right-of-way 22.51 feet to a point on a curve of Northerly convexity whose radius is 683.00 feet and whose chord bears S83°46'15"W 113.72 feet; thence Southwesterly along the arc of said curve and said Northerly right-of-way 113.86 feet to the point of beginning. Containing 0.453 acres.

THAT said Certified Survey Map is a correct representation of all of the exterior boundaries of the land surveyed and the division thereof made and I have fully complied with the provisions of Chapter 236.34 of the Wisconsin Statutes and the Village of Pleasant Prairie Land Division and Development Control Ordinance.

June 26, 2015

Mark R. Madsen, S-2271
Nielsen Madsen & Barber, S.C.
1458 Horizon Blvd., Suite 200
Racine, WI 53406
(262) 634-5588

OWNER'S CERTIFICATE OF DEDICATION

CREEKSIDE PP, LLC, as Owner does hereby certify that it caused the land described on this Certified Survey Map to be surveyed, mapped and dedicated as represented on this Certified Survey Map and does further certify that this Certified Survey Map is required by s.236.34 to be submitted to the following for approval or objection: Village of Pleasant Prairie.

CREEKSIDE PP, LLC

Signed: _____

Print Name: _____

IN WITNESS WHEREOF, this _____ day of _____, 2015.

Witness: _____ _____

Date: June 26, 2015
This Instrument was drafted by Mark R. Madsen
PROJECT ID: 2014.0030.04

CERTIFIED SURVEY MAP NO. _____

A RE-DIVISION OF OUTLOT 7 OF CREEKSIDE CROSSING ADDTION No. 1, BEING PART OF THE NORTHWEST 1/4 OF THE SOUTHEAST 1/4 OF SECTION 15, TOWNSHIP 1 NORTH, RANGE 22 EAST, IN THE VILLAGE OF PLEASANT PRAIRIE, KENOSHA COUNTY, WISCONSIN.

STATE OF _____)
ss.
COUNTY OF _____)

Personally came before me this _____ day of _____, 2015, the above-named person of said corporation to me known to be the person who executed the foregoing instrument and to me known to be such _____ of said Limited Liability Corporation, and acknowledged that _he executed the foregoing as such officer of said Limited Liability Corporation, by its authority.

_____

My Commission Expires: _____

VILLAGE PLAN COMMISSION APPROVAL

Approved by the Village Plan Commission, Village of Pleasant Prairie on this ____ day of _____, 2015.

_____
Thomas W. Terwall, Chairman

VILLAGE BOARD APPROVAL

Approved by the Village Board, Village of Pleasant Prairie on this ____ day of_____, 2015.

_____ _____
John P. Steinbrink, Village President

Attest: _____
Jane M. Romanowski, Village Clerk

Date: June 26, 2015
This Instrument was drafted by Mark R. Madsen
PROJECT ID: 2014.0030.04

VILLAGE OF PLEASANT PRAIRIE

Wisconsin Award for Municipal Excellence

Filed 6/29 2015 Published 7/27 2015
Public Hearing 8/10 2015 8/3 2015
Fee Paid 6/29 2015 Approved ____ 20__
Notices Mailed 7/10 2015 Denied ____ 20__

VILLAGE OF PLEASANT PRAIRIE, WISCONSIN
ZONING MAP AND TEXT AMENDMENT APPLICATION

To: Village Plan Commission & Village Board of Trustees of the Village of Pleasant Prairie:

I, (We), the undersigned owner(s)/agent do hereby petition the Village Board to amend the Village of Pleasant Prairie Zoning Map as hereinafter requested.

It is petitioned that the following described property be rezoned from the present R-8 (UHO) _____ District(s) to R-8 _____ District(s). The property petitioned to be rezoned is located at: NW Corner of 62nd Ave and 90th St. _____ and is legally described (address) as follows: Lot 1 of pending CSM (See attached legal description) _____

Tax Parcel Number(s): 92-4-222-153-0727

The proposed use for this property is: Two unit resdiential development

Petitioner's interest in the requested rezoning: Owner/Developer

Compatibility with adjacent land uses: Yes

I (We) are also requesting a Zoning Text Amendment to amend Section N/A of the Village Zoning Ordinance.

I (We), have contacted the Community Development Department to arrange a pre-application meeting to discuss the proposed request to determine additional information that may be needed for this request.

I, (We), hereby certify that all the above statements and attachments submitted herewith are true and correct to the best of my knowledge.

PROPERTY OWNER:

Print Name: Creekside PP, LLC.

Signature: _____

Address: 4015 80th Street

Kenosha, WI, 53402
(City) (State) (Zip)

Phone: (262) 842-0483

Fax: (262) 842-0449

Email: jonah@bearcommerical.com

Date 6-26-2015

OWNER'S AGENT:

Print Name: Jonah Hetland, Bear Development, LLC.

Signature: _____

Address: 4015 80th Street

Kenosha, WI, 53402
(City) (State) (Zip)

Phone: (262) 842-0483

Fax: (262) 842-0449

Email: jonah@bearcommerical.com

Date: 6-26-2015

RECEIVED
JUN 29 2015
PLEASANT PRAIRIE

Commencing at the Southwest corner of the said Southeast ¼ Section; thence N02°39'47"W 1828.61 feet along the North-South ¼ line of said Section; thence N87°20'14"E 311.85 feet to the point of beginning of this description; run thence N00°02'34"W 127.82 feet; thence N12°44'49"E 38.23 feet; thence S86°35'40"E 124.28 feet to the Westerly right-of-way of 62nd Avenue and a point on a curve of Easterly convexity whose radius is 7467.00 feet and whose chord bears S02°04'22"W 131.15 feet; thence Southerly along the arc of said curve and said Westerly right-of-way 131.15 feet to the Northerly right-of-way of 90th Street and a point on a curve of Southeasterly convexity whose radius is 15.00 feet and whose chord bears S45°33'40"W 20.45 feet; thence Southwesterly along the arc of said curve and said Northerly right-of-way 22.51 feet to a point on a curve of Northerly convexity whose radius is 683.00 feet and whose chord bears S83°46'15"W 113.72 feet; thence Southwesterly along the arc of said curve and said Northerly right-of-way 113.86 feet to the point of beginning. Containing 0.453 acres.

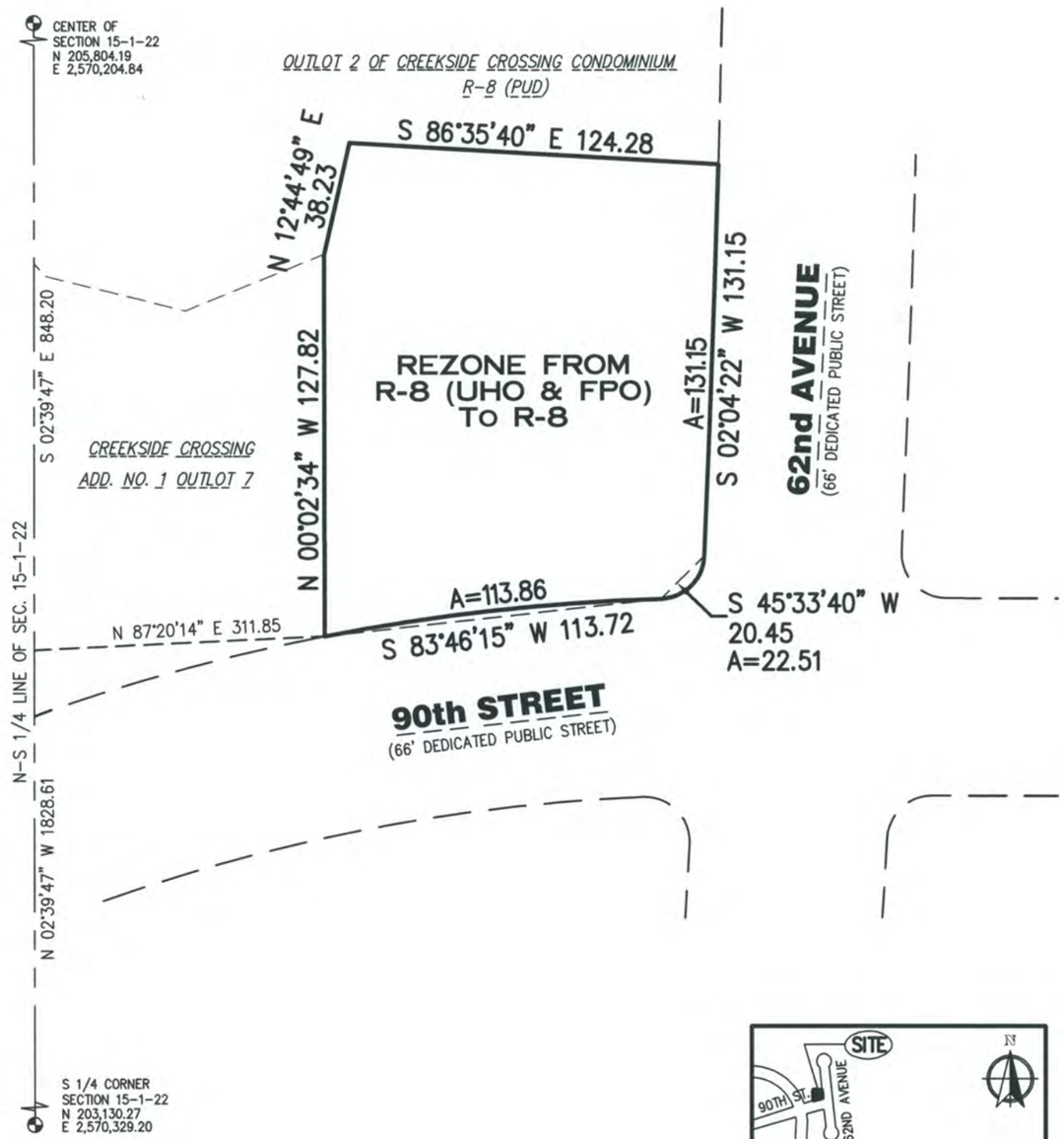

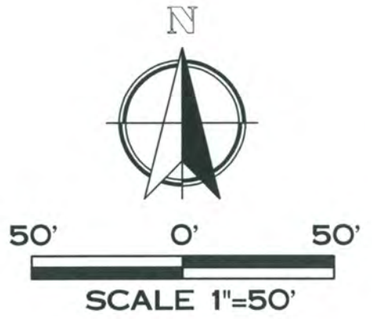

BEARINGS BASE: GRID NORTH, WISCONSIN
COORDINATE SYSTEM, SOUTH ZONE.
BASED UPON NAD 1927.

LOCATION MAP
SE 1/4 OF SECTION 15-1-22

Nielsen Madsen & Barber S.C.
Civil Engineers and Land Surveyors
1458 Horizon Blvd. Suite 200, Racine, Wisconsin 53406
Phone (262) 634-5588 * Facsimile (262) 634-5024 * Website nmbsc.net

Scale: 1" = 50'
Drawn By: SCB
DATE: 6-25-2015
2014.0030.04
Rezoning Exhibit
CREEKSIDE TERRACE
R-8 LOT
Pleasant Prairie, Wisconsin

Friday, June 26, 2015 11:02:14 AM

E. **PUBLIC HEARING AND CONSIDERATION OF A FLOODPLAIN BOUNDARY ADJUSTMENT** for the request of Matt Carey. P.E., with Pinnacle Engineering Group, agent for Route 165, LLC owner of the property generally located at the 11200 block of 120th Avenue (West Frontage Road) to remove 3,519 cubic yards from the 100-year floodplain and to create 4,963 cubic yards of 100-year floodplain to compensate for the 100-floodplain begin filled for the an office building and site improvements for a Uline Headquarters Office building (H2).

Recommendation: Village staff recommends that the Plan Commission send a favorable recommendation to the Village Board to approve the Floodplain Boundary Adjustment subject to the comments and conditions of the August 10, 2015 Village staff report.

VILLAGE STAFF REPORT OF AUGUST 10, 2015

CONSIDERATION OF A FLOODPLAIN BOUNDARY ADJUSTMENT for the request of Matt Carey. P.E., with Pinnacle Engineering Group, agent for Route 165, LLC owner of the property generally located at the 11200 block of 120th Avenue (West Frontage Road) to remove 3,519 cubic yards from the 100-year floodplain and to create 4,963 cubic yards of 100-year floodplain to compensate for the 100-floodplain begin filled for the an office building and site improvements for a Uline headquarters office building (Uline H2).

The petitioner is requesting approval of a floodplain boundary adjustment to remove 23,519 cubic yards from the Des Plaines River (UT1E) 100-year floodplain and to create 4,963 cubic yards of 100-year floodplain to compensate for the 100-floodplain begin filled for the an office building and site improvements on a 28–acre site for a Uline headquarters office building (Uline H2) to be located at 11200 block of the West Frontage Road in the Village.

The petitioner is requesting approval to place fill within the current 100-year floodplain limits along the southern portion of the property and to create additional 100-year floodplain compensatory storage within two (2) retention basins located at the south end of the developed property adjacent to the 100-year floodplain. Natural fill consisting mainly of clay will be utilized as the fill material. The project is anticipated to begin this fall.

A detailed hydraulic analysis and report was completed for the floodplain boundary adjustment using the U.S. Army Corps of Engineers HEC—RAS modeling software, version 4.1.0. The report incorporates previous data that was used by SEWRPC in 2003 and contained within the 2012 Kenosha County Flood Insurance Study (FIS). The HEC 2 model, supplied by the WI DNR, served as the baseline for the report. The results provided in this model (referred to as the "Effective Model") differ slightly from the results of the100 year surface elevations listed in the FIS. Accordingly, a "Duplicate Effective Model" was then run using the HEC RAS modeling software. With this model in place, three (3) additional models were created to accurately depict the changes to the site since 2003 as well as the proposed, onsite Uline H2 development. These models consisted of the following:

Corrected Effective Model – Incorporates differences in modeling techniques between HEC 2 and HEC RAS, as well as any modeling discrepancies that were discovered when comparing the model to the Duplicate Effective Model.

Pre-Project Model – Incorporates any man-made changes to the floodplain area that occurred since SEWRPC's initial and approved study in 2003.

Post-Project Model – Incorporates the proposed Uline H2 development. Compensatory Mitigation is proposed to not increase any flood elevations beyond the limits of the property. Floodplain elevations within the sections contained in the adjacent property to the west have either been reduced or matched.

According to the Village's Floodplain Ordinance, the Village shall only permit amendments to the floodplain boundary that are consistent with the purposes of Section 420-131 of the Village Zoning Ordinance and that are not in conflict with the applicable rules of the Wisconsin Department of Natural Resources (WI DNR) or the Federal Emergency Management Agency (FEMA). As evaluated by staff, the proposed floodplain boundary amendment shows that the 100-year floodplain modification complies with the following Village requirements:

- The floodplain boundary adjustment is consistent with Section 420-131 of the Village Zoning Ordinance and not in conflict with the applicable rules of the WI DNR and FEMA.
- The amendment to the floodplain boundaries does not increase the regional flood stage elevation beyond the proposed Uline H2 development, as there will be no base flood elevation increases off-site to the adjacent upstream or downstream properties as shown in the Post-Project Model prepared by the petitioner's engineer;
- The floodplain amendment provides adjusted water surface profiles and adjusted floodplain limits to reflect the increased flood elevation within the Uline H2 development;
- Areas removed from the floodplain are contiguous to land lying outside the floodplain;
- The flood storage capacity being removed from the floodplain, as defined by the ground surface and the regional flood elevation, has a corresponding equal volume of flood storage capacity in the vicinity of the removal, to compensate for the lost flood storage capacity;
- There is no excavation below the ordinary high-water mark which is being utilized as providing any equal volume of storage capacity for compensation purposes;
- Areas of compensating flood storage capacity are draining to the receiving stream; and
- Land removed from the floodplain will be filled to an elevation at least two (2) feet above the elevation of the floodplain.

The petitioner is also in the process of obtaining WI DNR and FEMA approvals to fill the floodplain as depicted on the application on the basis that the grading will satisfy volumetric compensatory mitigation requirements for a Conditional Letter of Map Revision based on fill (CLOMR-F) and ultimately a Letter of Map Revision based on fill (LOMR-F) after construction is completed.

On March 9, 2015 Preliminary Site and Operational Plans were conditionally approved by the Plan Commission for the mass grading and preliminary approval of an office building and site improvements for a Uline Headquarters Office building (H2). One of the conditions included in that approval was obtaining the required Floodplain Boundary Adjustment approvals from all government agencies. Detailed Site and Operational Plans will be submitted by the petitioner for Village staff and Plan Commission review and approval prior to obtaining building permits for the project.

Village staff recommends that the 100-year Floodplain Boundary Adjustment be conditionally approved by the Village subject to the above comments and the following conditions/comments:

1. The petitioner shall submit the Village Erosion Control Permit Application along with plans and specifications (paper and electronic copy) for review and issuance of the Village's Erosion Control Permit. Copies of the floodplain boundary approvals from WI DNR and FEMA (CLOMR-F) shall be included with the Erosion Control application.
2. Upon completion of the Floodplain Boundary Adjustment grading work, an as-built survey and final floodplain calculations shall be submitted to verify the compliance with design plans. The as-built survey and calculations shall be reviewed by the Village and the WI DNR prior to being re-submitted to FEMA for review. Upon review of the documents by the Village and WI DNR, the petitioner shall submit and receive a final FEMA LOMR-F.

3. After the FEMA LOMR-F is issued and the final as-built grading plans and supporting documentation is approved by the WI DNR and the Village, **the petitioner shall submit applications to amend the Village Comprehensive Land Use Map and the Village Zoning Map and Text to reflect the revised floodplain boundary adjustment.** A Certificate of Compliance will be issued by the Village after the Comprehensive Land Use Plan Amendment, the Zoning Text Amendment and Zoning Map Amendment are approved by the Village.

VILLAGE OF
PLEASANT
PRAIRIE

rev. 8/05

Filed _____ 20__ Published _____ 20__

Public Hearing _____ 20__ _____ 20__

Fee Paid _____ 20__ Approved _____ 20__

Notices Mailed _____ 20__ Denied: _____ 20__

VILLAGE OF PLEASANT PRAIRIE, WISCONSIN
COMMUNITY DEVELOPMENT DEPARTMENT
FLOODPLAIN BOUNDARY ADJUSTMENT

TO THE PLEASANT PRAIRIE VILLAGE PLAN COMMISSION AND BOARD OF TRUSTEES: The undersigned hereby applies for a permit to do the work herein described, and as shown on the required engineered drawings and analysis and hereby agrees that all wok will be done in accordance with all the lands of the State of Wisconsin and all of the Village of Pleasant Prairie Ordinance.

Subdivision/Development Name: Uline Corporate Campus-H2 Facility Lot ____ Block ____

Property location: 120th Ave (WFR) b/n 104th and 116th St. Zoning District(s): M-5

Abutting Body of Water/River/Stream: Unnamed Tributary No. 1E of the Des Plains River

Section 25 Township 1N Range: 21E

Tax Parcel Number(s): 91-4-121-254-0122, 91-4-121-254-0401, 91-4-121-254-0406

Project Specifications: This information shall also be provided with or shown on the required site plans.

Reason and purpose for the Floodplain Adjustment: Proposed development requires a portion of the existing floodplain to be filled.

Total volume proposed to be removed from the 100 year floodplain: 3,519 CY

Total volume proposed to be added to the 100 year floodplain: 4,963 CY

Type of fill materials (soil types) proposed to be used: Natural fill consisting of mainly clay. Will be stabilized upon completion.

Mitigation measures or restoration methods to be used: Compensatory Storage is proposed by utilizing the two proposed detention ponds (volume) located at the south end of the site.

Time Schedule for filling: October 2015

Each applicant applying for a floodplain adjustment permit is charged with the knowledge of the requirements of the Village Zoning Ordinance. Copies of the Ordinance or portions thereof are available for sale or inspection upon request. Any statement made, site plan submitted, any project improperly constructed, any assurance given or permit erroneously issued contrary to this Ordinance is null and void and may be subject to prosecution.

Section 420-131 of the Village Zoning Ordinance entitled "FPO, FLOODPLAIN OVERLAY DISTRICT" shall be complied with. In particular, Section 420-131t of the Village Zoning Ordinance entitled "REMOVAL OF LANDS FROM FLOODPLAIN/AMENDMENTS" outlines the general requirements to amend the floodplain boundary. Please be advised that compliance with the provisions of these regulations shall not be grounds for removing lands from the floodplain, unless they are removed by filling to a height of at least two feet above the regional flood elevation, the fill is contiguous to land lying outside the floodplain, the official floodplain map is amended, and FEMA revises the Flood Insurance Rate Map or issues a Letter of Map Amendment or Revision.

I (We), have provided the non-refundable filing fee and 12 copies of the required plans and engineering data necessary to amend the floodplain boundary and one (1) copy reduced onto a 8 1/2" x 11".

I,(We), hereby certify that all the above statements and attachments submitted herewith are true and correct to the best of my knowledge, and understand the above requirements and procedures.

PROPERTY OWNER:

Name: Brad Folkert (Route 165, LLC)
(Please Print)

Signature: Brad Folkert

Address: 12575 Uline Drive

Pleasant Prairie, WI 53158
(City) (State) (Zip)

Phone: 262-612-4200

Fax: 262-612-4250

Date 07-07-15

OWNER'S AGENT:

Name: Matt Carey (Pinnacle Engineering Group)
(Please Print)

Signature:

Address: 15850 W. Bluemound Road, STE 210

Brookfield, WI 53005
(City) (State) (Zip)

Phone: 262-754-8888

Fax: 262-754-8850

Date: 07-07-15

From: Adam R. Artz, P.E. [mailto:adam.artz@pinnacle-engr.com]
Sent: Friday, August 07, 2015 7:02 AM
To: Jean Werbie-Harris; Matt Fineour
Cc: 'Brad Folkert'; 'Chad Braaksma'; 'Matt Carey'
Subject: ULINE H2 | Floodplain narrative

The proposed ULINE H2 project proposes modifications to the onsite floodplain, designated as Unnamed Tributary 1E to the Des Plaines River, to gain necessary access to the West Frontage Road and to allow the proposed site development. The proposed impacts require a Hydraulic and Hydrologic Analysis ("H&H Analysis") by local, state, and federal code/law to substantiate the proposed improvements. Additionally, the model is being used to substantiate modifications previously undertaken as part of the widening of West Frontage Road and removing the former Kenosha Military Museum prior to ULINE's connection to this site.

Previous modifications to the site included an extension of large diameter culvert crossing the West Frontage Road along with placement of fill within the floodplain for widening of the West Frontage Road and also to accommodate a removal of the Kenosha Military Museum. In addition to these previously realized floodplain impacts, the H&H Analysis includes proposed impacts for the proposed ULINE south access road and minor fills along the periphery of the floodplain limits.

The modeling and supporting justification documents have been provided to the Wisconsin Department of Natural Resources ("WDNR") for review. Subsequently, the WDNR has issued a Technical Approval stating that the modeling meets the floodplain study requirements of the Wisconsin Administrative Code.

Although the H&H analysis represents the high-water elevations based upon the proposed modifications to the floodplain, the Wisconsin Administrative Code also conditions, "When any proposed development would remove flood storage volume, an equal volume of storage, as defined by the ground surface and the regional flood elevation, shall be provided to compensate for the volume of storage which is lost." Additionally Village Ordinance conditions, "Whenever any volume of flood storage capacity is removed from the floodplain, as defined by the ground surface and the regional flood elevation, an equal volume of flood storage capacity shall be created within the existing or newly created floodplain boundary, in the vicinity of the removal, to compensate for the lost flood storage capacity. Excavation below the ordinary high-water mark shall not be considered as providing any equal volume of storage capacity for compensation purposes. Any such area of compensating flood storage capacity shall drain freely to the receiving stream."

In addition the H&H analysis, the two southern stormwater basins will create a volume greater than that to be removed from the floodplain. The basins are immediately adjacent to the lost flood storage capacity and will be above the ordinary high water mark. The basins will be hydraulically connected to Unnamed Tributary 1E to the Des Plaines River through culverts. The proposed floodplain volume mitigated within the mentioned stormwater basins will become floodplain and bear the protections of floodplain.

Adam R. Artz, P.E. (WI, IL, MN) | Senior Project Manager : Principal

PINNACLE ENGINEERING GROUP
Engineering | Natural Resources | Surveying

15850 W. Bluemound Road | Suite 210 | Brookfield, WI 53005
(262) 754-8888 Main | (414) 588-5851 Mobile | (262) 754-8850 Fax
adam.artz@pinnacle-engr.com | www.pinnacle-engr.com

PLAN | DESIGN | DELIVER

CONFIDENTIALITY NOTICE:

This message is intended for the use of the individual or entity to which it is addressed and may contain information that is privileged, confidential and exempt from disclosure under applicable law. If the reader of this message is not the intended recipient or the employee or agent responsible for delivering this message to the intended recipient, you are hereby notified that any dissemination, distribution or copying of this communication is strictly prohibited. If you have received this communication in error, please notify us immediately by email reply.

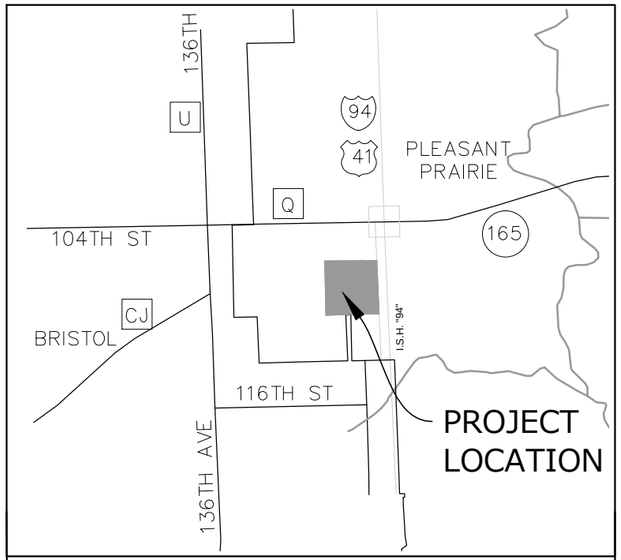

LOCATION MAP
NTS

NOTES:

1. **SITE ELEVATION SURVEY AND CONTOURING NOTE:**

NGVD29 TO NAVD88 VERTICAL DATUM CONVERSION:
0.0 FEET NGVD29 = -0.3 FEET NAVD88

***PER KENOSHA COUNTY FLOOD INSURANCE STUDY, PAGE 36**

2. **EXISTING CONTOURS ARE FROM TOPOGRAPHY GATHERED BY JENKINS SURVEY AND DESIGN IN 2004. THIS IS PRIOR TO ANY OF THE MAN-MADE CHANGES TO THE SITE. PLEASE REFER TO THE ULINE H2 FLOODPLAIN BOUNDARY ADJUSTMENT REPORT FOR ADDITIONAL INFORMATION.**

3. **PLEASE REFER TO THE ULINE H2 STORMWATER MANAGEMENT PLAN FOR ADDITIONAL INFORMATION PERTAINING TO THE PROPOSED STORMWATER PONDS.**

Cut/Fill Summary

Name	Cut Factor	Fill Factor	2d Area	Cut	Fill	Net
SE POND COMP STORAGE- VOLUME	**1.00**	**1.00**	15643.31 Sq. Ft.	2012.34 Cu. Yd.	0.00 Cu. Yd.	2012.34 Cu. Yd.<Cut>
SW POND COMP STORAGE- VOLUME	**1.00**	**1.00**	24477.79 Sq. Ft.	2950.50 Cu. Yd.	0.00 Cu. Yd.	2950.50 Cu. Yd.<Cut>
Totals			40121.10 Sq. Ft.	4962.84 Cu. Yd.	0.00 Cu. Yd.	4962.84 Cu. Yd.<Cut>

Cut/Fill Summary

Name	Cut Factor	Fill Factor	2d Area	Cut	Fill	Net
WEST FILL- VOLUME	**1.00**	**1.00**	45553.32 Sq. Ft.	29.57 Cu. Yd.	2097.94 Cu. Yd.	2068.37 Cu. Yd.<Fill>
SE DRIVEWAY FILL- VOLUME	**1.00**	**1.00**	15628.11 Sq. Ft.	0.24 Cu. Yd.	1448.53 Cu. Yd.	1448.29 Cu. Yd.<Fill>
Totals			61181.43 Sq. Ft.	29.81 Cu. Yd.	3546.47 Cu. Yd.	3516.66 Cu. Yd.<Fill>

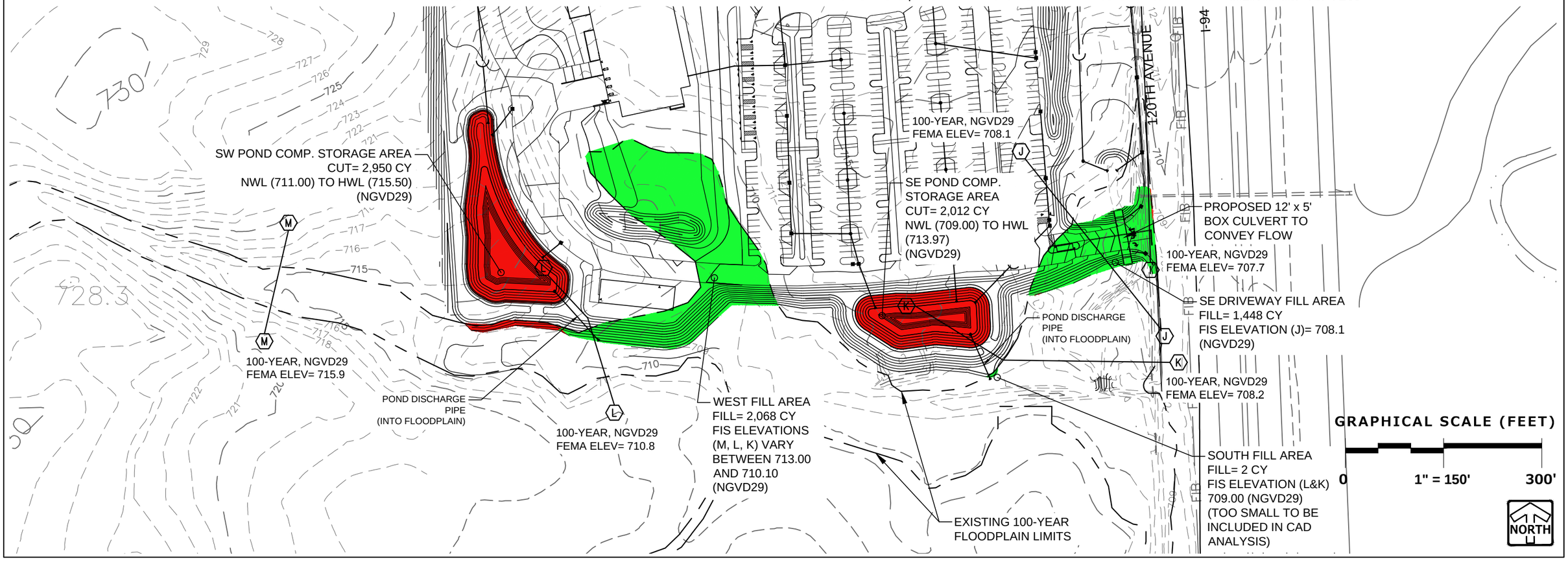

ULINE H2- FLOODPLAIN COMPENSATORY MITIGATION PLAN

07/08/15

FLOODPLAIN BOUNDARY ADJUSTMENT

Uline Corporate Campus- H2

Pleasant Prairie, WI

PEG Project Number: 119.00A-WI

May 18, 2015

Revised July 7, 2015

PINNACLE ENGINEERING GROUP
15850 W. Bluemound Road | Suite 210 | Brookfield, WI 53005
www.pinnacle-engr.com

TABLE OF CONTENTS

INTRODUCTION 2
PROPOSED FLOODPLAIN BOUNDARY ADJUSTMENT 2
HYDRAULIC MODELS 3
CONCLUSION 5

APPENDICIES

APPENDIX 1 – FEMA FIRM PANEL

APPENDIX 2 – SOILS INFORMATION

APPENDIX 3 – HYDRAULIC MODELING INFORMATION TABLES

APPENDIX 4 – CROSS SECTION EXHIBITS

APPENDIX 5 – SITE PHOTOGRAPHS

APPENDIX 6 – CD CONTAINING HYDRAULIC MODELS

Questions and comments can be directed to:

Matt A. Carey, P.E.
Project Engineer
Phone: 262.754.8888 | Fax: 262.754.8850
matt.carey@pinnacle-engr.com

PINNACLE ENGINEERING GROUP
15850 W. Bluemound Road | Suite 210
Brookfield, WI 53005
www.pinnacle-engr.com

INTRODUCTION

This study outlines a proposed floodplain boundary adjustment to the Unnamed Tributary No. 1E to the Des Plains River (UT1E) in Pleasant Prairie, WI (Kenosha County). A 28 acre development is proposed as part of an expansion to the existing Uline Corporate Campus that includes an 80,000 SF office building, adequate parking, and stormwater features. The site (referred as "Uline H2") is located along 120th Ave. between 104th St. and 116th St and is currently owned by Route 165, LLC.

This development will impact the current, existing floodplain which is located within the property limits and along the southern edge of the proposed disturbed area. The current floodplain limits are presented within the Southeastern Wisconsin Regional Planning Commission (SEWRPC) report entitled "A Comprehensive Plan for the Des Plains River Watershed" from June of 2003. This same analysis is also represented in the Kenosha County, WI Flood Insurance Study (FIS) that was published in June of 2012, as well as on FEMA FIRM Panel 189, Map Number 55059C0189D. Please refer to **Appendix 1** for the FEMA FIRM Map.

There have been recent improvements to this area since this analysis was adopted. In 2009, the Village of Pleasant Prairie extended the existing 60" culvert located at the southeast corner of the site. This culvert currently conveys all discharge for the site, as well as the rest of UT1E, across 120th Ave and I-94. During the same time frame as the culvert extension, additional grading within the floodplain (and proposed site property) was completed. An attempt to adjust the current floodplain boundary was attempted via compensatory mitigation in 2008 but was ultimately not accepted by the WDNR because there were increases at the base flood elevation at four cross sections.

The analysis outlined within this study provides a comparison between the original, Effective Model (completed in HEC 2 modeling software) and the Duplicate Effective Model (completed in HEC RAS modeling software). This report also includes a Corrected Effective Model and Pre-Project Model which incorporates any observed modeling corrections, as well as the man-made improvements completed in 2008 (and discussed above) and floodplain grading adjustments. Finally, a Post-Project Model, that includes the proposed floodplain adjustments from the new development, is included as well.

PROPOSED FLOODPLAIN ADJUSTMENT

As part of the Uline Corporate Campus H2 project, a stormwater management plan has been developed for the final build-out condition. Three detention ponds are proposed that meet Des Plains River Watershed standards for peak discharge. A bypass swale along the west property line is also proposed to divert offsite drainage from the existing, adjacent parcel to the west. The development will alter drainage patterns and peak flow rates to UT1E (as previously modeled by SEWRPC). Adopting the required stormwater regulations will reduce the current, existing flow rates to UT1E. However, as a conservative approach, the flows contained within the Post-Project Model will be modeled to remain the same (prior to the H2 development).

Proposed improvements along the south end of the development will impact the existing floodplain. A compensatory storage area is proposed within storage volume provide by the proposed southwest and southeast detention ponds. Please refer to Appendix 4,"Floodplain Sections- Post-Project Conditions" Exhibit which shows these areas in greater detail.

HYDRAULIC MODELS

The hydraulic analysis for this study was executed using U.S. Army Corps of Engineers (USACE) HEC-RAS modeling software, version 4.1.0.

Duplicate Effective Model (or "DEM")

The current hydraulic model, used for UT1E for the current, approved Kenosha County FIS was obtained from the WDNR in April of 2015. The "Effective Model" was completed and provided in HEC-2 (modeling software) format by the WDNR. These results slightly differ from those listed in the 2012 Kenosha County Flood Insurance Study. Cross section locations and UT1E alignment was received from SEWRPC. The model was then converted to HEC-RAS.

The SEWRPC cross sections were in the National Geodetic Vertical Datum 1929 (NGVD 29), while the Kenosha County FIS results are in the North American Vertical Datum of 1988 (NAVD88). The conversion factor from NGVD to NAVD88 is -0.3 feet. All additional models and cross-section elevations are in NGVD29.

When converting to HEC-RAS, differences within the models must be accounted for. They typically include the following: differences in bridge/culvert modeling routines, method for conveyance calculations, critical depth default, and floodway computations. To account for this, changes were made to both the Duplicate Effective Model (DEM) and the Corrected Effective Model (CEM). Changes to the DEM include the following:

- Bridges distances and deck width were correctly revised for bridge sections RM 1.9475 and RM 2.091.
- Downstream reach lengths were updated from RM 2.093 and RM 1.956.
- Manning's roughness coefficient (or "n") values were added to the culvert bottoms at RM 1.9475 and 2.091.
- Correct culvert sizes (modeled in a lidded condition) were updated to correct dimensions at RS 1.991 and 2.034. The existing culvert crossing includes portion of both 60" CMP connected to a 5' x 3.1' concrete rectangular box.

Appendix 3, Table 1 compares the hydraulic output from the updated HEC-RAS DEM to that of the original HEC-2 model

Corrected Effective Model (or "CEM")

The DEM was used as a base for the Corrected Effective Model (CEM). The following changes were made as a result from converting the HEC 2 model to HEC RAS:

- The conveyance calculation method was adjusted to utilize the HEC-2 style method for more closely reflect the HEC-2 Effective Model (Between every coordinate point).

- The blocked flow condition in RS 1.866 was changed to be an ineffective flow condition.
- The encroachment method was reviewed for compliance with NR 116 standards. During this review it was discovered that the 100-year flood profile was not selected. The encroachment profile as been changed to the 100-year flood profile.

Additional discrepancies were discovered when reviewing the DEM and are accounted for with the CEM. This includes the following:

- The 100-year flow values listed in the Kenosha County FIS (366 cfs and 144 cfs) were note reflected in the HEC 2 and DEM (listed as 350 cfs and 144 cfs). They have been updated accordingly.
  - Increasing the flow values listed above resulted in two sections (2.069 and 2.058) have 100-year water surface elevations which are higher than the existing 120th Ave. roadway elevations.

Also, additional cross sections were added to the CEM to reflect comparisons to the Pre-Project and Post-Project condition models:

- RM 2.043, 2.069, and 2.217.

Results of the CEM can also be found in Appendix 3, Tables 1 and 2. Also refer to "Floodplain Sections- Corrected Effective Conditions" in Appendix 4.

Pre-Project Conditions Model

The Corrected Effective Model was then modified to account for the "man-made" changes that have occurred within the floodplain since current effective study was adopted. These updates result in the Pre-Project Model. Changes include the following:

- 60" CMP Culvert Extension- Added 44 LF (Difference between Section 2.035 and surveyed end of existing culvert).
- Adjusted cross sections based on new topographic data (Previous Compensatory Mitigation Attempt and Roadway Grading Improvements along 120th Ave).
- Cross Section 2.290 was added to the Pre-Project Model (See explanation in Post-Project Model below).
- Section 2.058 was removed from the Pre-Project Model as the cross section orientation does that accurately reflect and is not perpendicular to the revised stream alignment.

Results of the Pre-Project Model can be found in Appendix 3, Table 2. The exhibit entitled "Floodplain Sections- Pre-Project Conditions" can also be referenced in Appendix 4.

Post-Project Conditions Model

As previously discussed, the proposed H2 development will impact the existing floodplain at the south end of the site. The most notable impact is the proposed southeast entrance to the site, which connects to 120th Ave near the existing 60" discharge culvert. A 12' x 5' box culvert is proposed at this crossing. Also, it is proposed to remove an existing 30" culvert near the southeast corner of the site.

Section 2.058 was removed from the Post-Project Model as the cross section orientation does that accurately reflect and is not perpendicular to the revised stream alignment near the proposed southeast entrance to the development.

Section 2.290 was added to the Post-Project Model as grading is proposed within the floodplain in this area. A drop in elevation (excavation) is proposed to reduce the effects of tail water shockwave to the cross sections located within the adjacent (upstream) property to the west. This revised grading reduces the 100-year surface water elevation at Section 2.349 from the Pre-Project Model to the Post-Project Model.

Per the Village of Pleasant Prairie Floodplain Ordinance, all compensatory storage areas must be located outside of the existing floodplain boundary. Two proposed stormwater detention ponds (located in the southwest and southeast corners of the site) will provide compensatory storage volume as they discharge directly into the floodplain and are located outside of the floodplain. These volumes will provide adequate compensation for the volume lost due to the two proposed fill areas at the south end of the site.

Please refer to Appendix 4, "Floodplain Sections- Post-Project Conditions Exhibit" which displays proposed site development relative to the floodplain.

Results of the Post-Project Model can be found in Table 3, Table 2.

CONCLUSION

This report outlines an analysis of the Unnamed Tributary No. 1E to the Des Plaines River. It incorporates previous data that was used by SEWRPC in 2003 and contained within the 2012 Kenosha County Flood Insurance Study (FIS).

A HEC 2 model, supplied by the WDNR, served as the baseline for this report. The results provided in this model (also referred to as the "Effective Model") differ slightly from the results/100-year water surface elevations listed in the FIS. A "Duplicate Effective Model" was then run using HEC RAS modeling software. With this model in place, then three additional models were created to accurately depict the changes to the site since 2003, as well as the proposed, onsite Uline H2 development. These models consist of the following:

- **Corrected Effective Model-** Incorporates differences in modeling techniques between HEC 2 and HEC RAS, as well as any modeling discrepancies that were discovered when comparing the model to the DEM.

- **Pre-Project Model-** Incorporates any "man-made" changes to the floodplain area that occurred since SEWRPC's initial and approved study in 2003.

- **Post-Project Model**- Incorporates the proposed Uline H2 development. Compensatory Mitigation is proposed to not increase any flood elevations beyond the limits of the property. Floodplain elevations within the sections contained in the adjacent property to the west have either been reduced or matched.

APPENDIX 1

FEMA FIRM PANEL

MAP SCALE 1" = 500'

250 0 500 1000

FEET

METERS

NFIP

NATIONAL FLOOD INSURANCE PROGRAM

PANEL 0189D

FIRM

FLOOD INSURANCE RATE MAP

KENOSHA COUNTY, WISCONSIN AND INCORPORATED AREAS

PANEL 189 OF 331

(SEE MAP INDEX FOR FIRM PANEL LAYOUT)

CONTAINS:

COMMUNITY	NUMBER	PANEL	SUFFIX
BRISTOL, VILLAGE OF	550595	0189	D
PLEASANT PRAIRIE, VILLAGE OF	550613	0189	D

Notice to User: The **Map Number** shown below should be used when placing map orders; the **Community Number** shown above should be used on insurance applications for the subject community.

MAP NUMBER
55059C0189D

EFFECTIVE DATE
JUNE 19, 2012

Federal Emergency Management Agency

This is an official copy of a portion of the above referenced flood map. It was extracted using F-MIT On-Line. This map does not reflect changes or amendments which may have been made subsequent to the date on the title block. For the latest product information about National Flood Insurance Program flood maps check the FEMA Flood Map Store at www.msc.fema.gov

APPENDIX 2

SOILS INFORMATION

Soil Map—Kenosha and Racine Counties, Wisconsin
(Uline H2)

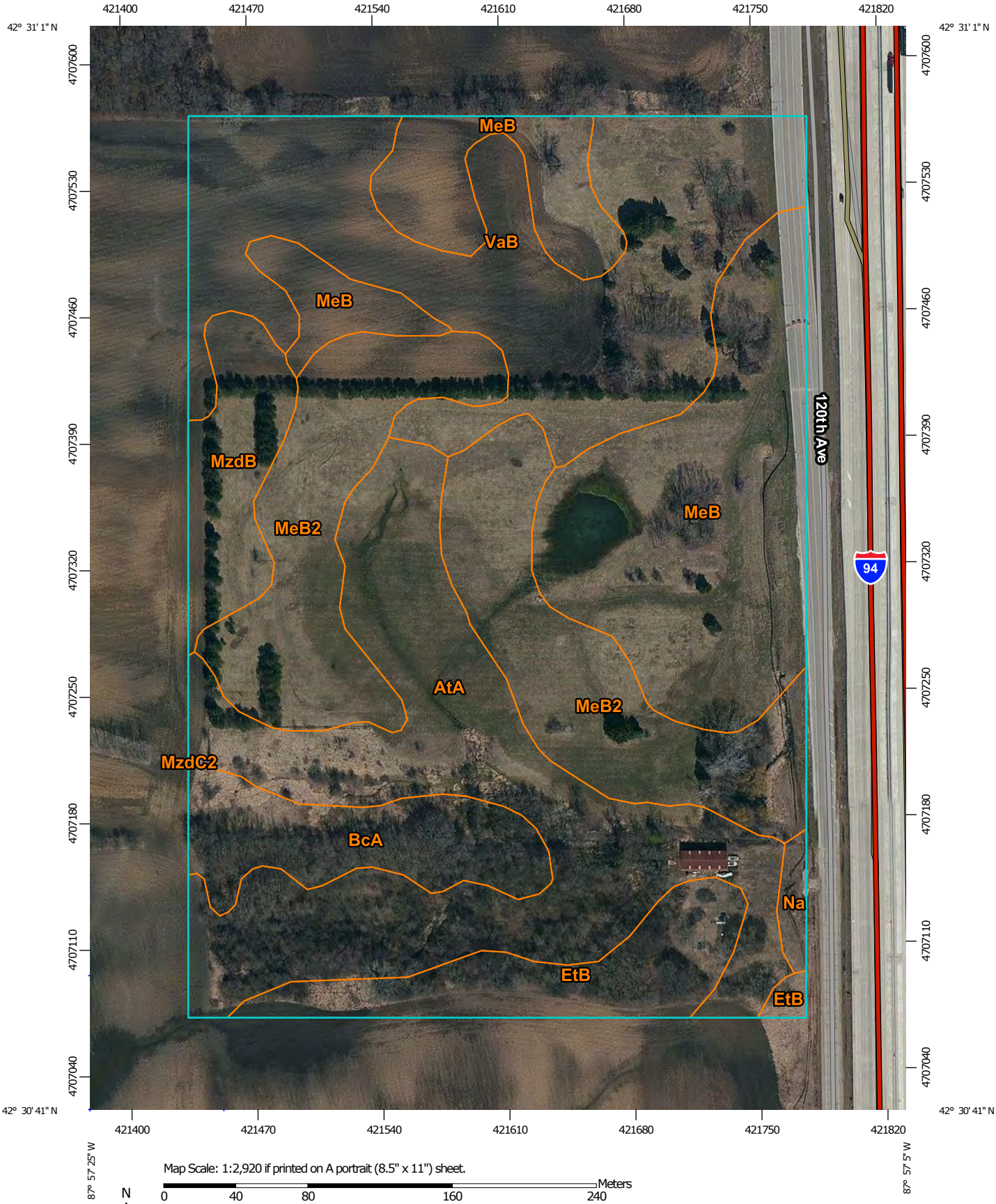

Map Scale: 1:2,920 if printed on A portrait (8.5" x 11") sheet.

N

Meters
0 40 80 160 240

Feet
0 100 200 400 600

Map projection: Web Mercator Corner coordinates: WGS84 Edge tics: UTM Zone 16N WGS84

MAP LEGEND

Area of Interest (AOI)
- Area of Interest (AOI)

Soils
- Soil Map Unit Polygons
- Soil Map Unit Lines
- Soil Map Unit Points

Special Point Features
- Blowout
- Borrow Pit
- Clay Spot
- Closed Depression
- Gravel Pit
- Gravelly Spot
- Landfill
- Lava Flow
- Marsh or swamp
- Mine or Quarry
- Miscellaneous Water
- Perennial Water
- Rock Outcrop
- Saline Spot
- Sandy Spot
- Severely Eroded Spot
- Sinkhole
- Slide or Slip
- Sodic Spot
- Spoil Area
- Stony Spot
- Very Stony Spot
- Wet Spot
- Other
- Special Line Features

Water Features
- Streams and Canals

Transportation
- Rails
- Interstate Highways
- US Routes
- Major Roads
- Local Roads

Background
- Aerial Photography

MAP INFORMATION

The soil surveys that comprise your AOI were mapped at 1:15,800.

Warning: Soil Map may not be valid at this scale.

Enlargement of maps beyond the scale of mapping can cause misunderstanding of the detail of mapping and accuracy of soil line placement. The maps do not show the small areas of contrasting soils that could have been shown at a more detailed scale.

Please rely on the bar scale on each map sheet for map measurements.

Source of Map: Natural Resources Conservation Service
Web Soil Survey URL: http://websoilsurvey.nrcs.usda.gov
Coordinate System: Web Mercator (EPSG:3857)

Maps from the Web Soil Survey are based on the Web Mercator projection, which preserves direction and shape but distorts distance and area. A projection that preserves area, such as the Albers equal-area conic projection, should be used if more accurate calculations of distance or area are required.

This product is generated from the USDA-NRCS certified data as of the version date(s) listed below.

Soil Survey Area: Kenosha and Racine Counties, Wisconsin
Survey Area Data: Version 10, Sep 18, 2014

Soil map units are labeled (as space allows) for map scales 1:50,000 or larger.

Date(s) aerial images were photographed: Apr 29, 2011—Mar 14, 2012

The orthophoto or other base map on which the soil lines were compiled and digitized probably differs from the background imagery displayed on these maps. As a result, some minor shifting of map unit boundaries may be evident.

Map Unit Legend

Kenosha and Racine Counties, Wisconsin (WI601)			
Map Unit Symbol	**Map Unit Name**	**Acres in AOI**	**Percent of AOI**
AtA	Ashkum silty clay loam, 0 to 2 percent slopes	9.5	22.3%
BcA	Beecher silt loam, 1 to 3 percent slopes	2.4	5.6%
EtB	Elliott silty clay loam, 2 to 6 percent slopes	2.5	5.8%
MeB	Markham silt loam, 2 to 6 percent slopes	9.1	21.5%
MeB2	Markham silt loam, 2 to 6 percent slopes, eroded	8.0	18.8%
MzdB	Morley silt loam, 2 to 6 percent slopes	1.8	4.3%
MzdC2	Morley silt loam, 6 to 12 percent slopes, eroded	0.0	0.0%
Na	Navan silt loam	0.3	0.6%
VaB	Varna silt loam, 2 to 6 percent slopes	9.0	21.1%
Totals for Area of Interest		**42.5**	**100.0%**

Soils Map

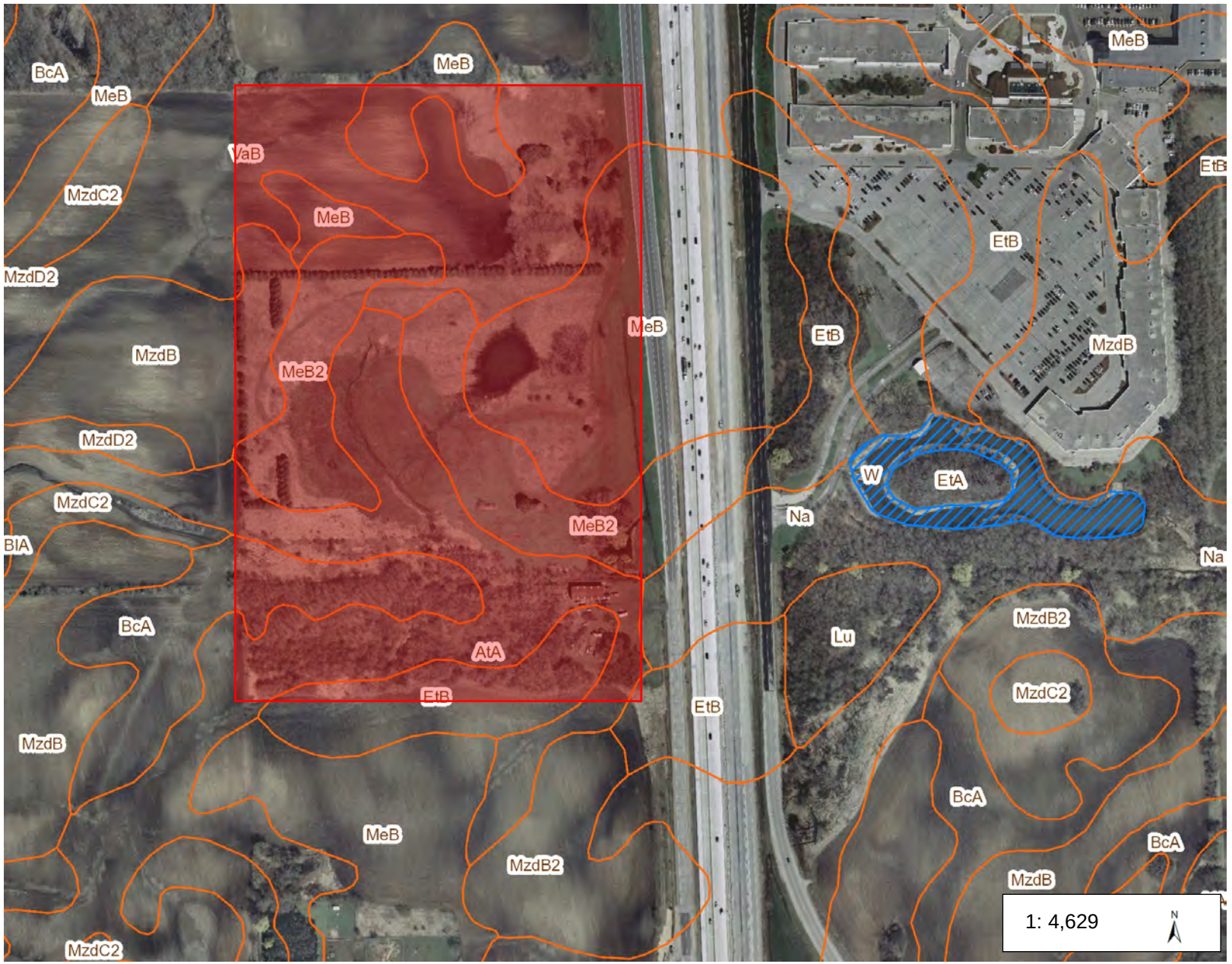

Legend

NRCS Wisconsin Soils

- Soil Mapping Unit
- Water

2010 Air Photos (WROC)

Notes

0.1 0 0.07 0.1 Miles

NAD_1983_HARN_Wisconsin_TM

© Latitude Geographics Group Ltd.

DISCLAIMER: The information shown on these maps has been obtained from various sources, and are of varying age, reliability and resolution. These maps are not intended to be used for navigation, nor are these maps an authoritative source of information about legal land ownership or public access. No warranty, expressed or implied, is made aregarding accuracy, applicability for a particular use, completemenss, or legality of the information depicted on this map. For more information, see the DNR Legal Notices web page: http://dnr.wi.gov/org/legal/

APPENDIX 3

HYDRAULIC MODELING TABLES

Table 1: HEC 2 (FIS) and HEC RAS Model Comparison

FIS FWDT

UNNAMED TRIBUTARY NO. 1E TO DES PLAINES RIVER

XS	Dist Ft	Dist mi.	FW width	Area	velocity	Regulatory (NAVD88)	Regulatory (NGVD29)	w/o FW	w/ FW	increase	HEC-2 output	dif H2-FWDT (w/ NGVD29)	RAS output	dif. RAS-FWDT (NGVD29)	dif. RAS-H2
A	6,864	**1.300**	250	386	0.9	676.5	676.8	676.5	676.5	0.0	**676.75**	-0.05	676.82	0.02	**0.07**
B	7,387	**1.399**	112	116	3.1	677.3	677.6	677.3	677.3	0.0	**677.52**	-0.08	677.59	-0.01	**0.07**
C	8,601	**1.629**	62	110	3.3	686.9	687.2	686.9	686.9	0.0	**687.11**	-0.09	687.18	-0.02	**0.07**
D	9,340	**1.769**	93	127	2.9	693.2	693.5	693.2	693.2	0.0	**693.42**	-0.08	693.39	-0.11	**-0.03**
E	9,852	**1.866**	106	201	1.8	**698.9**	**699.2**	698.6	698.6	0.0	**699.08**	-0.12	698.91	-0.29	**-0.17**
F	10,237	**1.939**	10	19	7.8	698.9	699.2	698.9	698.9	0.0	**699.09**	-0.11	699.09	-0.11	**0**
G	10,326	**1.956**	10	35	4.1	700.9	701.2	700.9	700.9	0.0	**700.99**	-0.21	700.99	-0.21	**0**
H	10,436	**1.977**	5	21	6.9	702.1	702.4	702.1	702.1	0.0	**702.04**	-0.36	702.06	-0.34	**0.02**
I	10,748	**2.036**	5	30	4.8	707.4	707.7	707.4	707.4	0.0	**706.94**	-0.76	707.24	-0.46	**0.3**
J	10,869	**2.059**	236	553	0.3	707.8	708.1	707.8	707.8	0.0	**707.44**	-0.66	707.69	-0.41	**0.25**
K	11,033	**2.090**	245	433	0.3	707.9	708.2	707.9	707.9	0	**707.46**	-0.74	707.71	-0.49	**0.25**
L	11,857	**2.246**	71	57	2.5	710.5	710.8	710.5	710.5	0.0	**710.94**	0.14	710.82	0.02	**-0.12**
M	12,403	**2.349**	68	66	2.2	715.6	715.9	715.6	715.6	0.0	**715.66**	-0.24	715.77	-0.13	**0.11**
N	12,973	**2.457**	31	30	4.9	722.4	722.7	722.4	722.4	0.0	**722.83**	0.13	722.66	-0.04	**-0.17**
O	13,406	**2.539**	96	75	0.3	725.1	725.4	725.1	725.1	0.0	**725.72**	0.32	725.77	0.37	**0.05**

DEM - RAS *(NGVD29)*

	Reach	River Sta	Profile	Q Total (cfs)	Min Ch El (ft)	W.S. Elev (ft)	Crit W.S. (ft)	E.G. Elev (ft)	E.G. Slope (ft/ft)	Vel Chnl (ft/s)	Flow Area (sq ft)	Top Width (ft)	Froude # Chl
A	Reach-1	1.3	PF 5	350	671.1	676.82	674.07	676.84	0.000601	1.59	389.68	250.84	0.14
B	Reach-1	1.399	PF 5	350	675.5	677.59		677.72	0.013498	2.96	118.34	113.47	0.51
	Reach-1	1.545	PF 5	350	681.1	684.18	683.21	684.27	0.006172	3.96	167.36	109.05	0.41
C	Reach-1	1.629	PF 5	350	684.5	687.18		687.39	0.007405	3.97	109.91	61.86	0.44
D	Reach-1	1.769	PF 5	350	691.9	693.39		693.53	0.009358	3.05	119.79	92.34	0.45
	Reach-1	1.776	PF 5	350	697.3	698.37	698.37	698.62	0.045263	4.22	93.09	201.5	0.88
	Reach-1	1.802	PF 5	350	696.6	698.78		698.8	0.000326	1.25	288.18	151.66	0.15
E	Reach-1	1.866	PF 5	350	696.6	698.91		698.96	0.000684	1.94	198.33	105.4	0.22
F	Reach-1	1.939	PF 5	130	697.3	699.09	699.09	699.96	0.014903	7.49	17.36	142.9	1
	Reach-1	1.9475		Culvert									
G	Reach-1	1.956	PF 5	130	697.6	700.99	699.38	701.23	0.008791	3.89	33.41	281.72	0.38
	Reach-1	1.975	PF 5	130	698.2	702.17	700.95	702.83	0.019808	6.55	19.84	401.26	0.58
H	Reach-1	1.976	PF 5	130	699.3	702.06	702.06	703.44	0.001746	9.41	13.82	5	1
	Reach-1	1.991	PF 5	130	699.8	702.55	702.55	703.94	0.001773	9.45	13.76	5	1
	Reach-1	1.992	PF 5	130	699.8	703.07	703.07	704.5	0.014868	9.6	13.54	4.71	0.94
	Reach-1	2.034	PF 5	130	701.1	706.65	704.35	707.44	0.010495	7.13	18.22		0.53
I	Reach-1	2.035	PF 5	130	701.1	707.24	704.41	707.58	0.004492	4.65	27.98	424.73	0.35
J	Reach-1	2.058	PF 5	130	702.1	707.69		707.7	0.000037	0.47	450.28	214.68	0.04
K	Reach-1	2.089	PF 5	130	703.6	707.71	706.51	707.71	0.000237	1.17	241.19	167.29	0.1
	Reach-1	2.091		Culvert									
	Reach-1	2.093	PF 5	130	703.6	707.72	707.01	707.73	0.000227	1.15	244.69	167.91	0.1
	Reach-1	2.156	PF 5	130	706	707.91		707.95	0.00439	1.59	81.84	85.82	0.29
L	Reach-1	2.245	PF 5	130	709.3	710.82		710.92	0.009781	2.71	55.05	69.73	0.44
M	Reach-1	2.349	PF 5	130	713.9	715.77		715.85	0.008339	2.16	60.13	64.21	0.39
N	Reach-1	2.457	PF 5	130	719	722.66	722.47	723.07	0.020836	5.39	28.17	29.84	0.65
O	Reach-1	2.539	PF 5	130	722.9	725.77		725.8	0.003019	2.13	117.53	121.3	0.25
	Reach-1	2.567	PF 5	130	724.1	726.09		726.1	0.001429	0.88	151.28	196.92	0.15

Table 2: Summary of Water Surface Elevations (100-year Storm Event with NGVD 29 Vertical Datum)

River Mile	FEMA River Section	Effective Model (HEC 2) WSEL	Existing Channel Length (ft)	Duplicate Effective Model (HEC RAS) WSEL	DEM Channel Length (ft)	Corrected Effective Model (HEC RAS) WSEL	CEM Channel Length (ft)	CEM Increase (Over DEM)	Pre-Project Model (HEC RAS) WSEL	Pre-Project Channel Length (ft)	Pre-Project Increase (Over CEM)	Post-Project Conditions WSEL	Post-Project Channel Length (ft)	Post-Project Increase (Over Pre-Project)
1.3	**A**	676.75	250	676.82	251	676.80	250	-0.02	676.80	250	0.00	676.80	250	0.00
1.399	**B**	677.52	112	677.59	113	677.57	113	-0.02	677.57	113	0.00	677.57	113	0.00
1.545				684.18	109	684.19	109	0.01	684.19	109	0.00	684.19	109	0.00
1.629	**C**	687.11	62	687.18	62	687.18	62	0.00	687.18	62	0.00	687.18	62	0.00
1.769	**D**	693.42	93	693.39	92	693.46	93	0.07	693.46	93	0.00	693.46	93	0.00
1.776				698.37	202	698.39	206	0.02	698.39	206	0.00	698.39	206	0.00
1.802				698.78	152	698.80	152	0.02	698.80	152	0.00	698.80	152	0.00
1.866	**E**	699.08	106	698.91	105	698.94	232	0.03	698.94	232	0.00	698.94	232	0.00
1.939	**F**	699.09	10	699.09	143	699.22	151	0.13	699.22	151	0.00	699.22	151	0.00
1.9475	**CULVERT**													
1.956	**G**	700.99	10	700.99	282	701.19	298	0.20	701.19	298	0.00	701.19	298	0.00
1.975				702.17	401	702.37	403	0.20	702.37	403	0.00	702.37	403	0.00
1.976	**H**	702.04	5	702.06	5	702.26	5	0.20	702.26	5	0.00	702.26	5	0.00
1.991				702.55	5	702.75	5	0.20	702.75	5	0.00	702.75	5	0.00
1.992				703.07	5	703.25	5	0.18	703.25	5	0.00	703.25	5	0.00
2.034				706.65		707.16		0.51	N/A	N/A	N/A	N/A	N/A	N/A
2.035	**I**	706.94	5	707.24	425	708.01	441	0.77	707.16		-0.85	707.16		N/A
2.043*						708.36	96	N/A	708.15	337	-0.21	708.15	205	0.00
2.045*						708.36	200	N/A	708.49	107	0.13	708.49	107	0.00
2.055*	**CULVERT**													
2.058	**J**	707.44	236	707.69	215	708.37	244	0.68	N/A	N/A	N/A	**SECTION**	**REMOVED**	N/A
2.069*						708.37	239	N/A	708.50	202	0.13	708.63	198	0.13
2.089	**K**	707.46	245	707.71	167	708.37	191	0.66	708.50	214	0.13	708.64	301	0.14
2.091	**CULVERT**											**CULVERT**	**REMOVED**	N/A
2.093				707.72	168	708.38	191	0.66	708.51	268	0.13	708.64	262	0.13
2.156				707.91	86	708.44	117	0.53	708.55	121	0.11	708.66	136	0.11
2.217*						709.22	242	N/A	709.53	62	0.31	709.96	56	0.43
2.245	**L**	710.94	71	710.82	70	711.10	82	0.28	711.39	94	0.29	711.61	126	0.22
2.290*									713.33	84	N/A	712.60	163	N/A
2.349	**M**	715.66	68	715.77	64	715.62	59	-0.15	716.16	75	0.54	715.94	70	-0.22
2.457	**N**	722.83	31	722.66	30	723.05	41	0.39	722.61	28	-0.44	722.61	28	0.00
2.539	**O**	725.72	96	725.77	121	725.77	121	0.00	725.89	129	0.12	725.89	129	0.00
2.567				726.09	197	726.13	198	0.04	726.18	199	0.05	726.18	199	0.00
			1400		3469.14		4546.09			4005.75			4065.08	

*Added Section for Analysis, refer to Cross Section Exhibits

APPENDIX 4

CROSS SECTION EXHIBITS

LEGEND

TOPOGRAPHY

- 749 — EXISTING CONTOUR - CORRECTIVE EFFECTIVE MODEL (JSD SURVEY 2004)
- 749 — EXISTING CONTOUR - PRE-PROJECT MODEL (CHAPUT SURVEY 2014)
- PROPOSED CONTOUR - POST PROJECT MODEL

FLOODPLAIN CROSS SECTIONS

- EXISTING SECTION (SEWRPC)
- ADDED CORRECTED EFFECTIVE SECTION ONLY
- ADDED PRE/POST PROJECT SECTION ONLY
- ADDED POST PROJECT SECTION ONLY
- ADDED CORRECTED EFFECTIVE/PRE/POST PROJECT SECTION
- ADDED CORRECTED EFFECTIVE/PRE-PROJECT SECTION ONLY
- RM 2.089 (K) — RIVER MILE SECTION (FEMA SECTION ALPHA)
- 706.94 (DEM) — DUPLICATE EFFECTIVE MODEL BASE FLOOD ELEVATION
- 707.24 (CEM) — CORRECTED EFFECTIVE MODEL BASE FLOOD ELEVATION
- 707.30 (PRE) — PRE-PROJECT MODEL BASE FLOOD ELEVATION
- 707.32 (POST) — POST PROJECT MODEL BASE FLOOD ELEVATION

FLOODPLAIN LIMITS

- FLOODPLAIN - SEWRPC
- FLOODWAY - SEWRPC
- FLOODPLAIN - POST PROJECT MODEL

NOTES:

1. HORIZONTAL DATUM BASED ON WISCONSIN STATE PLANE COORDINATE SYSTEM AND NORTH AMERICAN DATUM OF 1927.
2. VERTICAL DATUM BASED ON NATIONAL GEODEDIC VERTICAL DATUM OF 1929 (NGVD29).
3. CORRECTED EFFECTIVE MODEL TOPOGRAPHY BY JENKINS SURVEY AND DESIGN IN 2004.
4. PRE-PROJECT EXISTING FLOODPLAIN TOPOGRAPHY PROVIDED BY CHAPUT LAND SURVEYS IN DECEMBER OF 2014.
5. POST-PROJECT, PROPOSED GRADING BY PINNACLE ENGINEERING GROUP, LLC.
6. SITE ELEVATION SURVEY AND CONTOURING NOTE:

   NGVD29 TO NAVD88 VERTICAL DATUM CONVERSION:
   0.0 FEET NGVD29 = -0.3 FEET NAVD88

   *PER KENOSHA COUNTY FLOOD INSURANCE STUDY, PAGE 36

NORTH

GRAPHICAL SCALE (FEET)

0 1" = 200' 400'

RM 2.035 (I)
707.24 (DEM)
708.01 (CEM)
707.16 (PRE)
707.16 (POST)

RM 2.043
N/A (DEM)
708.36 (CEM)
708.15 (PRE)
708.15 (POST)

RM 2.045
N/A (DEM)
708.36 (CEM)
708.49 (PRE)
708.49 (POST)

RM 2.058 (J)
707.69 (DEM)
708.37 (CEM)
N/A (PRE)
N/A (POST)

RM 2.217
N/A (DEM)
709.22 (CEM)
709.53 (PRE)
709.96 (POST)

RM 1.976 (H)
702.06 (DEM)
702.26 (CEM)
702.26 (PRE)
702.26 (POST)

RM 2.069
N/A (DEM)
708.37 (CEM)
708.50 (PRE)
708.63 (POST)

RM 1.939
699.09 (DEM)
699.22 (CEM)
699.22 (PRE)
699.22 (POST)

RM 1.956
700.99 (DEM)
701.19 (CEM)
701.19 (PRE)
701.19 (POST)

RM 2.539 (O)
725.77 (DEM)
725.77 (CEM)
725.89 (PRE)
725.89 (POST)

RM 2.457 (N)
722.66 (DEM)
723.05 (CEM)
722.61 (PRE)
722.61 (POST)

RM 2.349 (M)
715.77 (DEM)
715.62 (CEM)
716.16 (PRE)
715.94 (POST)

RM 2.290
N/A (DEM)
N/A (CEM)
713.33 (PRE)
712.60 (POST)

RM 2.245 (L)
710.82 (DEM)
711.10 (CEM)
711.39 (PRE)
711.61 (POST)

RM 2.089 (K)
707.71 (DEM)
708.37 (CEM)
708.50 (PRE)
708.64 (POST)

RM 2.156
707.91 (DEM)
708.44 (CEM)
708.55 (PRE)
708.66 (POST)

RM 2.093
707.72 (DEM)
708.38 (CEM)
708.51 (PRE)
708.64 (POST)

RM 2.567
726.09 (DEM)
726.13 (CEM)
726.18 (PRE)
726.18 (POST)

FLOODPLAIN SECTIONS- CORRECTED EFFECTIVE CONDITIONS SHEET 1 OF 3 06/25/15

PINNACLE ENGINEERING GROUP 5850 W. BLUEMOUND ROAD | SUITE 210 | BROOKFIELD, WI 53005 | WWW.PINNACLE-ENGR.COM | **PLAN | DESIGN | DELIVER**

PEG JOB# 119.00A

LEGEND

TOPOGRAPHY

- 749 — EXISTING CONTOUR - CORRECTIVE EFFECTIVE MODEL (JSD SURVEY 2004)
- 749 — EXISTING CONTOUR - PRE-PROJECT MODEL (CHAPUT SURVEY 2014)
- PROPOSED CONTOUR - POST PROJECT MODEL

FLOODPLAIN CROSS SECTIONS

- EXISTING SECTION (SEWRPC)
- ADDED CORRECTED EFFECTIVE SECTION ONLY
- ADDED PRE/POST PROJECT SECTION ONLY
- ADDED POST PROJECT SECTION ONLY
- ADDED CORRECTED EFFECTIVE/PRE/POST PROJECT SECTION
- ADDED CORRECTED EFFECTIVE/PRE-PROJECT SECTION ONLY
- RM 2.089 (K) — RIVER MILE SECTION (FEMA SECTION ALPHA)
- 706.94 (DEM) — DUPLICATE EFFECTIVE MODEL BASE FLOOD ELEVATION
- 707.24 (CEM) — CORRECTED EFFECTIVE MODEL BASE FLOOD ELEVATION
- 707.30 (PRE) — PRE-PROJECT MODEL BASE FLOOD ELEVATION
- 707.32 (POST) — POST PROJECT MODEL BASE FLOOD ELEVATION

FLOODPLAIN LIMITS

- FLOODPLAIN - SEWRPC
- FLOODWAY - SEWRPC
- FLOODPLAIN - POST PROJECT MODEL

NOTES:

1. HORIZONTAL DATUM BASED ON WISCONSIN STATE PLANE COORDINATE SYSTEM AND NORTH AMERICAN DATUM OF 1927.
2. VERTICAL DATUM BASED ON NATIONAL GEODEDIC VERTICAL DATUM OF 1929 (NGVD29).
3. CORRECTED EFFECTIVE MODEL TOPOGRAPHY BY JENKINS SURVEY AND DESIGN IN 2004.
4. PRE-PROJECT EXISTING FLOODPLAIN TOPOGRAPHY PROVIDED BY CHAPUT LAND SURVEYS IN DECEMBER OF 2014.
5. POST-PROJECT, PROPOSED GRADING BY PINNACLE ENGINEERING GROUP, LLC.
6. SITE ELEVATION SURVEY AND CONTOURING NOTE:

   NGVD29 TO NAVD88 VERTICAL DATUM CONVERSION:
   0.0 FEET NGVD29 = -0.3 FEET NAVD88

   *PER KENOSHA COUNTY FLOOD INSURANCE STUDY, PAGE 36

NORTH

GRAPHICAL SCALE (FEET)

0 — 1" = 200' — 400'

RM 2.035 (I)
707.24 (DEM)
708.01 (CEM)
707.16 (PRE)
707.16 (POST)

RM 2.043
N/A (DEM)
708.36 (CEM)
708.15 (PRE)
708.15 (POST)

RM 2.045
N/A (DEM)
708.36 (CEM)
708.49 (PRE)
708.49 (POST)

RM 2.058 (J)
707.69 (DEM)
708.37 (CEM)
N/A (PRE)
N/A (POST)

RM 2.217
N/A (DEM)
709.22 (CEM)
709.53 (PRE)
709.96 (POST)

RM 1.976 (H)
702.06 (DEM)
702.26 (CEM)
702.26 (PRE)
702.26 (POST)

RM 2.069
N/A (DEM)
708.37 (CEM)
708.50 (PRE)
708.63 (POST)

RM 1.939
699.09 (DEM)
699.22 (CEM)
699.22 (PRE)
699.22 (POST)

RM 1.956
700.99 (DEM)
701.19 (CEM)
701.19 (PRE)
701.19 (POST)

RM 2.089 (K)
707.71 (DEM)
708.37 (CEM)
708.50 (PRE)
708.64 (POST)

RM 2.093
707.72 (DEM)
708.38 (CEM)
708.51 (PRE)
708.64 (POST)

RM 2.156
707.91 (DEM)
708.44 (CEM)
708.55 (PRE)
708.66 (POST)

RM 2.245 (L)
710.82 (DEM)
711.10 (CEM)
711.39 (PRE)
711.61 (POST)

RM 2.290
N/A (DEM)
N/A (CEM)
713.33 (PRE)
712.60 (POST)

RM 2.349 (M)
715.77 (DEM)
715.62 (CEM)
716.16 (PRE)
715.94 (POST)

RM 2.457 (N)
722.66 (DEM)
723.05 (CEM)
722.61 (PRE)
722.61 (POST)

RM 2.539 (O)
725.77 (DEM)
725.77 (CEM)
725.89 (PRE)
725.89 (POST)

RM 2.567
726.09 (DEM)
726.13 (CEM)
726.18 (PRE)
726.18 (POST)

120th Avenue

FLOODPLAIN SECTIONS- PRE-PROJECT CONDITIONS

06/25/15

PINNACLE ENGINEERING GROUP
5850 W. BLUEMOUND ROAD | SUITE 210 | BROOKFIELD, WI 53005 | WWW.PINNACLE-ENGR.COM |

PLAN | DESIGN | DELIVER

PEG JOB# 119.00A

LEGEND

TOPOGRAPHY

- 749 — EXISTING CONTOUR - CORRECTIVE EFFECTIVE MODEL (JSD SURVEY 2004)
- 749 — EXISTING CONTOUR - PRE-PROJECT MODEL (CHAPUT SURVEY 2014)
- PROPOSED CONTOUR - POST PROJECT MODEL

FLOODPLAIN CROSS SECTIONS

- EXISTING SECTION (SEWRPC)
- ADDED CORRECTED EFFECTIVE SECTION ONLY
- ADDED PRE/POST PROJECT SECTION ONLY
- ADDED POST PROJECT SECTION ONLY
- ADDED CORRECTED EFFECTIVE/PRE/POST PROJECT SECTION
- ADDED CORRECTED EFFECTIVE/PRE-PROJECT SECTION ONLY

RM 2.089 (K)	RIVER MILE SECTION (FEMA SECTION ALPHA)
706.94 (DEM)	DUPLICATE EFFECTIVE MODEL BASE FLOOD ELEVATION
707.24 (CEM)	CORRECTED EFFECTIVE MODEL BASE FLOOD ELEVATION
707.30 (PRE)	PRE-PROJECT MODEL BASE FLOOD ELEVATION
707.32 (POST)	POST PROJECT MODEL BASE FLOOD ELEVATION

FLOODPLAIN LIMITS

- FLOODPLAIN - SEWRPC
- FLOODWAY - SEWRPC
- FLOODPLAIN - POST PROJECT MODEL

NOTES:

1. HORIZONTAL DATUM BASED ON WISCONSIN STATE PLANE COORDINATE SYSTEM AND NORTH AMERICAN DATUM OF 1927.
2. VERTICAL DATUM BASED ON NATIONAL GEODEDIC VERTICAL DATUM OF 1929 (NGVD29).
3. CORRECTED EFFECTIVE MODEL TOPOGRAPHY BY JENKINS SURVEY AND DESIGN IN 2004.
4. PRE-PROJECT EXISTING FLOODPLAIN TOPOGRAPHY PROVIDED BY CHAPUT LAND SURVEYS IN DECEMBER OF 2014.
5. POST-PROJECT, PROPOSED GRADING BY PINNACLE ENGINEERING GROUP, LLC.
6. SITE ELEVATION SURVEY AND CONTOURING NOTE:

   NGVD29 TO NAVD88 VERTICAL DATUM CONVERSION:
   0.0 FEET NGVD29 = -0.3 FEET NAVD88

   *PER KENOSHA COUNTY FLOOD INSURANCE STUDY, PAGE 36

NORTH

GRAPHICAL SCALE (FEET)

0 1" = 200' 400'

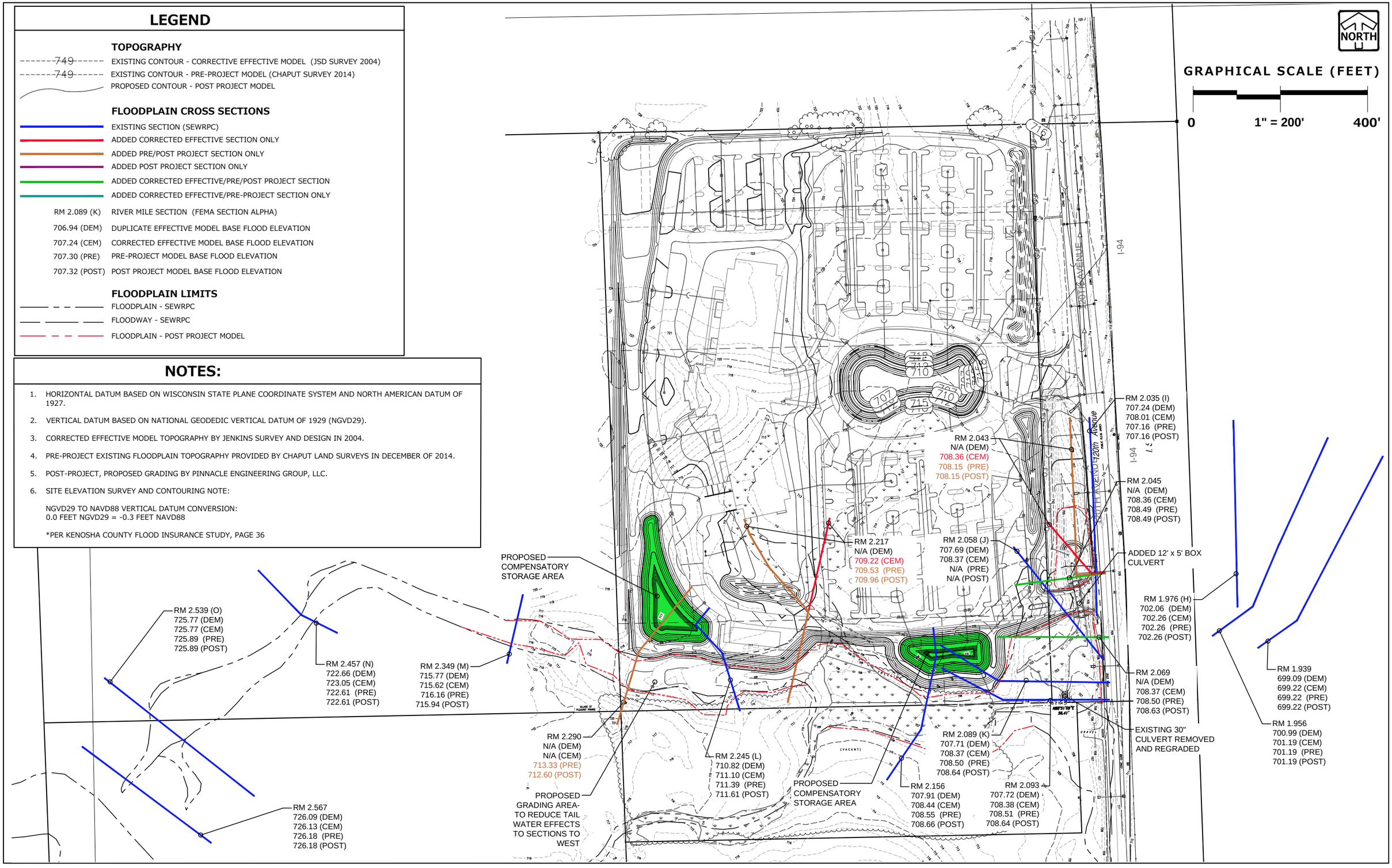

FLOODPLAIN SECTIONS- POST-PROJECT CONDITIONS

SHEET 3 OF 3 06/25/15

PINNACLE ENGINEERING GROUP

5850 W. BLUEMOUND ROAD | SUITE 210 | BROOKFIELD, WI 53005 | WWW.PINNACLE-ENGR.COM |

PLAN | DESIGN | DELIVER **PEG JOB#** 119.00A

APPENDIX 5

SITE PHOTOGRAPHS

Picture 1- View of the existing floodplain area near the proposed southeast access road connection to 120th Ave, looking south.

Picture 2- View of the existing floodplain area at the south end of the site, looking northwest.

Picture 3- View of the existing floodplain area at the south end of the site, looking west.

Picture 4- View of the existing floodplain area near the proposed southwest access road location (along 120th Ave), looking north.

APPENDIX 6

CD CONTAINING HYDRAULIC MODELS

THESE ITEMS ARE RELATED AND WILL BE DISCUSSED AT THE SAME TIME HOWEVER SEPARATE ACTION IS REQUIRED.

F. **PUBLIC HEARING AND CONSIDERATION OF ZONING MAP AND ZONING TEXT AMENDMENTS** for the following requests of Matt Carey, P.E. with Pinnacle Engineering Group, agent for Route 165, LLC owner of the property located at 12575 Uline Drive for a Zoning Map Amendment and Zoning Text Amendments: 1) to rezone the portion of the property being removed from the 100-year floodplain from the FPO, Floodplain Overlay District; 2) to rezone the portion of the property wherein 100-year floodplain was created into the FPO District; 3) to amend Section 420-131 I (1) (a) to specifically reference the change to the official floodplain maps and studies; and 4) to amend the Uline Corporate Campus Planned Unit Development in Appendix C of Chapter 420 of the Village Zoning Ordinance to allow for the construction of the Uline Conference Center with a size not to exceed 25,000 square feet in area and 45 feet in height.

Recommendation: Village staff recommends that the Plan Commission send a favorable recommendation to the Village Board to approve the Floodplain Boundary Adjustment subject to the comments and conditions of the June 8, 2015 Village staff report.

G. Consider the request of Matt Carey, P.E. with Pinnacle Engineering Group, agent for Route 165, LLC owner of the property located at 12575 Uline Drive for approval of the **Final Site and Operational Plans** for the construction of the Uline Conference Center.

Recommendation: Village staff recommends that the Plan Commission approve the Final Site and Operational Plans subject to the comments and conditions of the August 10, 2015 Village staff report.

VILLAGE STAFF REPORT OF AUGUST 10, 2015

CONSIDERATION OF ZONING MAP AND ZONING TEXT AMENDMENTS for the following requests of Matt Carey, P.E. with Pinnacle Engineering Group, agent for Route 165, LLC owner of the property located at 12575 Uline Drive for a Zoning Map Amendment and Zoning Text Amendments: 1) to rezone the portion of the property being removed from the 100-year floodplain from the FPO, Floodplain Overlay District; 2) to rezone the portion of the property wherein 100-year floodplain was created into the FPO District; 3) to amend Section 420-131 I (1) (a) to specifically reference the change to the official floodplain maps and studies; and 4) to amend the Uline Corporate Campus Planned Unit Development in Appendix C of Chapter 420 of the Village Zoning Ordinance to allow for the construction of the Uline Conference Center with a size not to exceed 25,000 square feet in area and 45 feet in height.

Consider the request of Matt Carey, P.E. with Pinnacle Engineering Group, agent for Route 165, LLC owner of the property located at 12575 Uline Drive for approval of the **Final Site and Operational Plans** for the construction of the Uline Conference Center.

THESE ITEMS ARE RELATED AND WILL BE DISCUSSED AT THE SAME TIME HOWEVER SEPARATE ACTION IS REQUIRED.

On June 8, 2015, the Village Plan Commission conditionally approved Preliminary Site and Operational Plans for the petitioner to begin the mass grading of a portion of the property for the construction of a conference center between the Uline Corporate Office building located at 12575 Uline Drive and the easternmost warehouse building on the property (Tax Parcel Number 91-4-121-252-0203). In addition, as part of the mass grading on June 15, 2015 the Village Board approved Resolution #15-21 related to a floodplain boundary adjustment for this project. Specifically the floodplain boundary adjustment allowed the petitioner to remove 2,226 cubic yards from the 100-year floodplain along the northwest corner of the retention facility and to create 3,795 cubic yards of floodplain storage in the southern portion of the retention facility to compensate for the 100-floodplain begin filled for the purpose of constructing a conference center. Permits have been issued for this mass grading work and the required Conditional Letter of Map Amendment for the floodplain boundary adjustment has been obtained from FEMA.

FINAL SITE AND OPERATIONAL PLANS: The site is intended to be used for the construction of a 2-level 22,500 square foot Uline conference center, to be generally located on the north side banks of an existing retention pond, which is located on the southwest side (approximately 300' away) of Uline's corporate office headquarters.

The new conference center facility will be used to support special events on the Uline campus that cannot be held in an existing space due to specific requirements of the various gatherings. The exterior of the conference center is clad in high-quality materials that include: stone masonry, specialty colored concrete, metal roof, and features a significant amount of glazing and an attached deck that extends over the water.

This new facility will be for private use and will only be used on an average of once per week for corporate meetings, conferences, and events with approximately 200 to 300 attendees (maximum capacity of the facility is 350 persons). Events at the conference center will be held in the morning, afternoon, and evenings, weekdays and weekends. The building includes a large gathering area on main level overlooking the existing pond. There is also an outdoor deck at the south end overlooking the pond. No new employees will be

hired to run the conference center and existing corporate staff will be utilized for coordinating events. Catering companies may be used as well.

The Conference Center will not increase the number of automobile trips to the Uline campus on a daily basis as it is not open to the general public. It is an amenity, not a destination. The maximum potential number of automobile trips is 350. This is based on the building's anticipated capacity for a large seated event and assumes all 350 people drive separately. Therefore, the parking requirements for events will be met by the existing 800-stall parking lot adjacent to the Uline office building. No new parking stalls are proposed.

The initial grading work has already begun on the project. The anticipated completion of the conference center is anticipated for 2016.

ZONING MAP AMENDMENT: The following Zoning Map Amendments for the conference center include:

- to rezone the portion of the property being removed from the 100-year floodplain from the FPO, Floodplain Overlay District and
- to rezone the portion of the property wherein 100-year floodplain was created into the FPO District.

These approvals are subject to final approval from FEMA (See ***attached***).

ZONING TEXT AMENDMENTS: The following Zoning Text Amendments for the conference center include:

- to amend Section 420-131 I (1) (a) to specifically reference the change to the official floodplain maps and studies. This approval is subject to final approval from FEMA (See ***attached***).
- to amend the Uline Corporate Campus Planned Unit Development in Appendix C of Chapter 420 of the Village Zoning Ordinance to allow for the construction of the Uline conference center with a size not to exceed 25,000 square feet in area and 45 feet in height (See ***attached***).

Village staff recommends approval of the Zoning Map and Zoning Text Amendments subject to the above comments and the following conditions/comments:

1. Upon completion of the floodplain boundary adjustment an as-built survey and floodplain calculations shall be submitted to verify the compliance with design plans. The as-built survey and calculations shall be reviewed by the Village and the WI DNR prior to being submitted to FEMA for review. Upon review of the documents by the Village, the petitioner shall submit and receive a final LOMR-F from FEMA.
2. Upon completion of the work, an as-built grading plan and supporting documentation certified and stamped by a Wisconsin registered and licensed professional engineer shall be submitted to the Village to verify compliance with design plans. The as-built grading plan and calculations shall be reviewed by the Village and the WI DNR prior to being submitted to FEMA for review and obtaining the required LOMR-F. A paper and pdf copy is required to be submitted.
3. Once a LOMR-F is issued and the final as-built grading plans and supporting documentation is approved by the WI DNR and the Village, **then the Zoning Map and Zoning Text Amendments (related to the floodplain boundary adjustment can become effective).**

Village staff recommends that the Final Site and Operational Plans be conditionally approved subject to the above comments and the following conditions/comments:

1. This approval is valid for six (6) months (until February 10, 2016). Prior to the expiration of this approval the building permits for the development shall be applied for and issued.

2. The plans have been reviewed for conformance with the Village Ordinances and generally accepted engineering practices and Village policies. Although the data has been reviewed, the design engineer is responsible for the thoroughness and accuracy of plans and supplemental data and for their compliance with all State and local codes, ordinances, and procedures. Modifications to the plans, etc. may be required should errors or changed conditions be found at a future date.

3. Compliance with the ***attached*** memorandum from the Village Fire & Rescue Department dated July 25, 2015. Please note that Condition #2 requires that a letter be submitted to the Fire & Rescue Department prior to receiving a building permit, stating that the project will comply with all requirements addressed within the July 25, 2015 memorandum. A copy of this letter shall also be provided to the Community Development Department.

4. **Upon approval of the revised Final Site and Operational Plans, and prior to the issuance of the required building, zoning and erosion control permits the following shall be submitted:**

    a. An electronic pdf of the final Site and Operational Plans.

    b. The Commercial Building Permit applications (building, HVAC, plumbing, electrical etc.) and required State approved plans.

    c. Written approval of the Site and Operational Plans from Prairiewood Commercial Association.

5. Compliance with the attached Village Staff Memorandum dated August 7, 2015 from the Village Inspection Superintendent.

6. **After the installation of the footings and foundations and prior to setting the walls, an as-built survey as stamped by a Wisconsin Registered Land Surveyor shall be submitted to the Village Building Inspection Department to verify that the building meets all of the required setbacks.**

7. Impact fees shall be paid as a condition prior to issuance of the building permit. (Based upon $1.94 per $1,000 of valuation as determined by the Village Assessing Department).

8. The hours of construction activity, operating heavy machinery or equipment associated with the grading, erosion control device installation, and overall site development shall be limited to Monday through Friday from 7:00 a.m. to 9:00 p.m. and Saturday and Sunday from 7:00 a.m. to 6:00 p.m.

9. Sign permits (and electrical permits for powered signs) are required for any conference center building wall, monument or directional signage.

10. The owner shall comply with all provisions of the Site & Operational Plan approvals, including compliance with the Village Performance Standards.

11. There shall be no outside banners, strings of pennants, flags, inflatable devices or streamers affixed or attached to the building(s), light poles, ground or landscaping, etc.

12. No use shall be conducted in such a way as to constitute a public or private nuisance or to violate any of the performance standards set out in Section 420-38 of the Village Zoning Ordinance.

13. All exterior mechanical units, whether roof-mounted or ground-mounted, shall be screened from the general public's view.

14. Prior to written occupancy all required landscaping shall be installed and written verification and/or certification shall be provided to the Village by the landscape designer that the landscaping has been installed in accordance with the approved landscape plan prior to the issuance of a certificate of compliance/occupancy.

    If weather conditions prevent installation of all or portions of the landscape materials, the Owner shall enter into a written agreement with the Village that specifies the date by which all approved landscaping shall be completed and grants the Village a temporary easement to complete the landscaping if not timely completed and shall deposit with the Village Clerk a cash deposit, an irrevocable letter of credit, performance bond or other financial assurance approved by the Zoning Administrator to ensure timely completion of all required landscaping; the amount of the financial assurance shall be equal to 110% of the contracted amount to complete the landscaping improvements in order to reasonably compensate the Village for the cost of completion of any landscaping improvements not completed within the specified time.

15. Prior to written occupancy of the building and associated site improvements three (3) copies of an as-built plan stamped by a Wisconsin Registered Land Surveyor and an electronic copy of the plan sets shall be submitted to the Village to verify that required building, above ground structures and all impervious surfaces meet the minimum setbacks and that all pavement markings were marked per the approved site plans and the grading of the site was completed pursuant to the approved Site and Operational Plans. In addition, written certification from the landscaping and signage companies that the landscaping and signage were installed pursuant to the approved Site and Operational Plans shall be submitted.

16. Prior to written occupancy an as-built electronic copy of the record drawing of graphical data of all private sewer, water, and storm sewer facilities and underground irrigation system installed shall be provided to the Village for the Village to update the Village's Geographic Informational System. Information shall conform to the Village's electronic format requirements. In addition, a paper copy prepared and stamped by the Engineer of Record for the project shall be submitted.

Office of the
Chief of Fire & Rescue
Doug McElmury

VILLAGE STAFF MEMORANDUM

TO: Jean Werbie-Harris, Community Development Director
FROM: Doug McElmury, Chief Fire & Rescue Department
CC: Deputy Chief, Craig Roepke
Lt. Thomas Clark, Fire & Rescue Department
Peggy Herrick, Assistant Planner, Community Development
SUBJECT: Review of the Final Site and Operational Plan for Uline Conference Center, 12575 Uline Drive
DATE: 25 July 2015

This is the review of the Final Site and Operational Plan for Uline Conference Center, 12575 Uline Drive

The Fire and Rescue Department will be responsible for providing fire prevention inspections of this facility, twice annually. The concerns of the Fire & Rescue Department are as follows:

1. **Distribution of Comments:** ***the person who obtains the building permit to all Contractors and Subcontractors affected by this document shall distribute Copies of these comments. This document outlines critical times and deadlines. All recipients of this document need to become familiar with the contents.***

2. **Compliance:** A letter shall be submitted to the Fire & Rescue Department prior to receiving a building permit, stating that the project will comply with all requirements addressed within this document.

3. In the event a conflict in code(s) is identified, or a conflict with the insurance carrier criteria occurs, the more stringent shall apply. In the event this conflicts with any codes adopted by the State of Wisconsin, the owner must petition the State directly for a variance. The Owner must demonstrate that they will provide materials or design equivalent to the code or that they will exceed the code when petitioning the State and or Village when applicable.

Upon review of the limited plans submitted, we have the following concerns:

- The proposed building is 22,500 sq. ft. with very limited access due to the location and proximity to the pond. The location of exits, exit discharge pathways and fire department access are not identified and will need to be reviewed after more detailed plans are submitted.

- The building will need to be equipped with a fire sprinkler system, a fire alarm system and recessed Knox Boxes. The fire alarm system must comply with the codes and standards for large assembly areas. The combination water main feeding the building will need to sized by a WI Licensed Fire Sprinkler Designer. Because of the limited access to the building there will need to be standpipe connections located within the building. These items will need further review once more detailed plans are submitted.

- AED. Because of the overall building size the owner shall install one or more public access Automatic External Defibrillator (AED) onsite for employee and customer use in the event of a sudden cardiac arrest. The Fire and Rescue Department can provide the training necessary to perform CPR and to operate the AED.

- Fire Alarm Control Panel: The main FACP will be placed in the fire pump room. Remote annunciator panel location(s) will also need to be determined during the pre-construction meeting.

- Fire hydrants are not indicated on the drawing. Fire hydrants shall be spaced no more than 350 feet apart around the perimeter of the building, per Village Ordinance 180-16.

- Pumper Pad and additional hydrant placement and access has been agreed to at a previous meeting. Access must be maintained to the pumper pad.

- Elevator must comply with the Village of Pleasant Prairie Ordinance 180-20 including the minimum size.

- Fire safety system plans, such as fire sprinkler and fire alarm plans, will need to be submitted to the State of Wisconsin Department of Safety and Professional Services and also to this fire department for review. No installation of any fire protection system is allowed until a satisfactory review is obtained from both departments.

- Severe Weather Shelter: The architect shall identify the area within the building that can be used as a "severe weather shelter" or "safe haven" during severe weather such as a tornado. That area will be identified with signage.

- All outside doors must have access to the interior. Such as a lock and handle provided at each door.

4. **Fire and Rescue Department Review and Comments:**

   A. Site and Operational Permits

   1. Site accessibility
   2. Fire Pump Location
   3. Pumper Pad
   4. Fire hydrant spacing

   B. Conditional Use and Operational

   1. Standpipe outlet locations **Not shown at this time.**
   2. Fire alarm pull stations **Not shown at this time.**
   3. Emergency and Exit Lighting **Not shown at this time.**
   4. Fire extinguishers

5. **Plan Review, Permits and Fees:** The plans for the fire protection underground, aboveground and fire alarm system shall be submitted for review a minimum of four (4) weeks before installation is scheduled to begin. The Village will use an independent fire safety consultant for review of all fire protection plans submitted. A satisfactory review must be completed before any permits will be issued and before construction can begin.

6. **Insurance Carrier:** The Owner of this project shall submit to the insurance carrier for review the plans for both underground water distribution and fire protection prior to construction. The Fire & Rescue Department shall receive a copy of the comments when plans are submitted for review.

7. **The following information must be submitted with the sprinkler plans for review:**
   Building height:
   Number of stories/floors:
   Mezzanines:
   Elevators:
   Hazard class:
   Commodity:
   Maximum storage height:
   Square footage, office space:
   Square footage, receiving space:
   Square footage, shipping space:
   Square footage, warehouse space:
   Exterior storage:
   Fire protection:

8. **The following Fees and Permits are generated directly from the Fire & Rescue Department.**
   NOTE: Permits are required from the Fire & Rescue Department for the installation of water main in addition to any permits required by other Village of Pleasant Prairie Departments.

- Water Usage
- Fire Protection Plans for Underground and Aboveground
- Fire Alarm System Plans
- Kitchen Hood Systems Plans
- Occupancy Permit & Re-Inspection fees

Permit fees must be paid at time of submission for review. Work cannot begin until all permits have been issued. A typical review turnaround is four weeks.

9. **Required Licenses:** A Wisconsin licensed fire protection contractor and Wisconsin licensed sprinkler fitters must install underground fire mains and aboveground fire protection. Periodic inspections of the job site will be made by fire inspectors to assure compliance.

10. **Pre-Construction Meeting:** A pre-construction meeting shall take place with the general contractor, the fire protection contractor, the Fire and Rescue Department and any other sub-contractor prior to the installation of any underground fire protection. The purpose of this meeting is to assure that the requirements of the State of Wisconsin that only a Wisconsin licensed sprinkler fitter shall perform the installation of all devices, etc. All parties will be asked to initial this document and or permit. Any violation of the installing requirements will be reported in writing to the State of Wisconsin Department of Safety and Professional Services.

11. **Site Access:** Access shall be provided to the site for all Fire Department apparatus, and must comply with the State of Wisconsin and the International Building Code, 2009 edition. A minimum wall-to-wall turning radius of 45'-0" shall be allowed for apparatus movement.
    a. All entrances from public streets, as well as road and driveways around the proposed building must be a minimum of 30 feet wide.
    b. All exterior exit pathways as well as access to the Fire Riser Room shall have a hard surface, leading to a hard surface.
    c. An exterior personnel door shall be located in close proximity to each fire sprinkler riser.
12. **Sprinkler System:** The building shall be equipped with an "automatic fire sprinkler system". The systems shall be designed and constructed to the current edition of NFPA 13, Automatic Fire Sprinklers and the Village of Pleasant Prairie Ordinance 180-16, Automatic Fire Sprinklers.

13. **Water Service:** If it is determined that the building will be serviced by a combination municipal water and fire protection main, that main must be sized by the fire protection (sprinkler) contractor. No main is allowed to travel underground, under the building.

14. **Plan Review (Underground):** A review of the underground drawings is required along with the fire protection drawings before a permit will be issued by the Fire and Rescue Department. Underground plans shall be submitted a minimum of four (4) weeks before installation begins.

15. **Standpipes:** Standpipes shall be provided in the building. In lieu of 1.5 inch hose stations, the building shall be equipped with standpipes that shall consist of 2-½ inch NST valve, capable of delivering 250 GPM, at 75 PSI measured at the standpipe valve. The standpipes shall be wet and placed adjacent to selected exterior exit doors, same side as the door handle/knob. Village Ordinance 180.16 G.

16. **Fire Hydrants:** Fire hydrants shall be spaced no more than 350 feet apart around the perimeter of the building, per Village Ordinance 180-16. The insurance carrier must agree in writing to the hydrant spacing. As many hydrants as possible shall be supplied directly by municipal water. The distance from the finished grade line to the lowest discharge shall be no less than 18 inches and no more than 23 inches. The Fire Department connections shall be located, and of sufficient height where typical snow fall or snow removal operations will not obstruct access.

17. **Fire Hydrant Acceptance**: This project will include the installation of water mains for domestic and fire protection use. Prior to the fire sprinkler system connection to any new water mains (including water mains, fire hydrants, laterals leading to the building and risers) must be hydrostatically tested flushed according to National Fire Protection Association (NFPA–National Fire Code) Standard 24 and witnessed by the Fire Chief and or the Chief's representative, the installing contractor and the fire sprinkler contractor at a minimum.

18. Fire hydrant and water main flushing can be disruptive to the job site and requires significant coordination of all sub-contractors by the General Contractor. Nonetheless flushing is an essential part of assuring public safety.

19. The General Contractor is highly encouraged to coordinate the flushing of all new water mains, fire hydrants, laterals leading to the building and risers with both the sub-contractors responsible, the Village of Pleasant Prairie Engineering Department, Fire & Rescue Department and the Water Utility Department, prior to seeking a 'clean water sample' on this site.
    NOTE: The Fire Protection Designer must meet with the Fire and Rescue Department before the underground drawings are submitted for review to finalize the placement of the hydrants.

20. **Pumper Pad:** There shall be dedicated space for a fire engine to have unobstructed access to the Pumper Pad. Both the Fire Department Sprinkler connection and the fire hydrant shall be installed remote from the building and located a minimum distance from the building equal to the highest wall. The fire hydrant shall be located no more than five (5) feet from the roadway and the Fire Department sprinkler connection shall be placed no more than five (5) feet from the fire hydrant. The Fire Department connection shall be constructed along with an underground drain with access for inspection. A guideline detail is attached and is meant to illustrate the requirements needed to meet the requirements stated in Village Ordinance 180-16.

    NOTE: *The Fire Department Connection riser shall include a single five (5) inch Storz fitting.*

21. **Bollards:** Shall be placed near fire hydrants, remote post indicator valves (PIV) and Fire Department connection(s) to prevent damage. Bollards shall be 6 inches in diameter. Bollards shall not obstruct charged fire hoses. It is recommended that the Fire Department approve the location of the bollard(s) before final placement is made.

22. **Strobe Light:** A strobe light shall be provided for each riser and installed vertically

above each sprinkler water flow bell. The strobe light shall operate for a sprinkler water flow. The lens color shall be RED. The strobe light shall meet Village specifications as found in section 180-16 K of the Sprinkler Ordinance.

23. **Fire Alarm System: The system shall be fully addressable so that detailed information will be received about the device in alarm.** Utilizing a fire pull station, sprinkler water flow, or any other fire detection device that maybe installed in this building shall activate the internal fire alarm system.
    a. **Manual Fire Alarm Pull Stations:** Shall be located at a minimum, immediately adjacent to each exterior door. Any additional exterior doors will be required to meet this requirement. The pull station shall not be placed in the area of the door, but immediately adjacent to the door jamb.
    b. **Pull Stations and Audiovisual Alarms:** Shall be installed per ADA requirements.
    c. **Smoke and Heat Detection:** Shall be installed as required.
    d. **Tamper Switches:** Tamper switches shall be placed on all sprinkler valves and be identified on the annunciator panel.
    e. **Fire Alarm Control Panel: Shall be addressable.** The annunciator panel type shall be approved by the Fire & Rescue Department. The Fire Alarm Control Panel shall be located within the Fire Pump Room. The panel shall identify a fire sprinkler water flow by riser, and the specific locations of the fire alarm pull stations and any other fire detection devices that may be installed in this building.
    f. **Annunciator Panel: Shall be addressable.** The annunciator panel type shall be approved by the Fire and Rescue Department. The panel shall identify a fire sprinkler water flow by riser, and the specific locations of the fire alarm pull stations and any other fire detection devices that may be installed in this building.
    g. **Transmission of Fire Alarms.** The method of transmission to central station must be approved by the Fire & Rescue Department. i.e. Phone line, RF Radio and /or Cellular technologies.
    h. **Central Station:** The Fire Alarm Control Panel shall transmit all fire alarm, tamper, trouble and supervisory signals to a central station that is certified by Underwriters Laboratories (UL) and/or Factory Mutual (FM) and approved by the Fire & Rescue Department. The owner shall provide such documentation for approval. It is recommended that the owner consult with the Fire & Rescue Department prior to signing any contracts with the Central station.

        1) The central station shall be provided with this information regarding the geographical location of this alarm:
            Village of Pleasant Prairie, County of Kenosha, State of Wisconsin

Fire:	Pleasant Prairie Fire & Rescue
Medical:	Pleasant Prairie Fire & Rescue

Phone numbers:
Emergency: **(262) 694-1402**
Non-emergency: (262) 694-7105

Business: (262) 694-8027

24. **Knox Box:** Knox Boxes shall be provided for the building, a determination of the exact number required will need to be made during the pre-construction meeting. One by each riser door, fire riser room and other needed access routes. The Knox Boxes shall be Model 4400. Two sets of all keys (Master, fire alarm pull station, annunciator, elevator, etc.) shall be placed within the box, as well as a copy of the pre-fire plan.

25. **MSDS Knox Box:** A minimum of One (1) Knox Box(s) designed for Material Safety Data Sheet storage shall be provided for each tenant to contain the data sheets on all products that are considered hazardous within the facility. The MSDS Box(s) shall be installed within the Fire Riser Room.

26. **Fire Extinguishers:** Shall meet NFPA 10 (Portable Fire Extinguishers) for the specific use of the building and be in sufficient number. Final approval, of fire extinguisher locations and quantity, will not be given until occupancy is taken, to see how a tenant furnishes the space. The company providing the fire extinguishers shall submit a letter to the Fire and Rescue Department stating the locations and size of the extinguishers are in compliance with NFPA 10.

27. **Emergency and Exit Lighting:** Exit and Emergency Lighting shall be provided and shall have battery backup. Combination units are acceptable and recommended. An Emergency Generator eliminates the need for battery backup. Exit and Emergency Lighting shall not be placed on electrical circuits that cannot be disturbed or interrupted, this is for test purposes. These circuits shall be clearly labeled. An Emergency light shall be placed within the fire riser room.

28. **Final Inspection:** The General Contractor shall provide the following documentation at the time the Final Inspection takes place and before a building occupancy certificate will be issued.
    a. The fire protection contractor shall provide the owner with a letter (upon completion of the sprinkler work) stating the sprinkler system, or portion thereof, is "100% operational and built according to the design", Village Ordinance, 180-16 N.
    b. Copy of contract with fire alarm central monitoring station.
    c. Copy of UL and/or FM certificate(s) for the fire alarm central monitoring station.
    d. Copies of the fire protection underground flushing documents.
    e. Copies of the underground and fire sprinkler hydrostatic test certificates.
    f. Copies of the fire sprinkler operational test certificates.
    g. Copies of the fire alarm test documents.
    h. Copies of other test documents such as, hood/duct, smoke, etc…
    i. The Pleasant Prairie Fire and Rescue Department shall have all information needed for our pre-fire plan prior to occupancy.
    j. Provide two- (2) CD's, one for the property owner and one for the Fire & Rescue

Department. The disks shall include all Floor plans and fire protection plans for the building in an as-built condition.

k. Severe Weather Shelter: The architect shall provide for both the Owner and the Fire & Rescue Department the area within the building that can be used as a "severe weather shelter" or "safe haven" during severe weather such as a tornado.
l. Maps of the fire alarm and fire sprinkler system shall be placed in the fire pump room, near the fire alarm control panel; the maps shall be hung on the wall, with a waterproof covering and accessible to firefighters wearing bulky clothes and equipment.
m. AED, in place at such time a tenant takes occupancy.
n. A copy of the tenants Emergency Plan must be submitted to the Fire & Rescue Department before occupancy.

29. **Fees:** Occupancy inspection fee and re-inspection fee will be assessed at the final inspection in accordance with ordinance 180-17.
30. **Occupancy:** All fire and life safety requirements must be in place prior to any building being occupied.

Office of the Building Inspection Superintendent
Sandro Perez

Village Staff Memorandum

To: Jean Werbie-Harris, Community Development Director

From: Sandro Perez, Building Inspection Superintendent

Subject: Uline Conference Center

Date: August 7, 2015

---

1. Building Inspection Department information:
   Hours: Mon-Fri, 8am-5pm.
   Phone# 262-694-9304
   Email: buildinginspection@plprairiewi.com

2. Permit applications can be found online at pleasantprairieonline.com

3. Inspections are performed Mon- Fri 9am-4pm except electrical inspections; those are only Tue & Thu mornings. 48hr notice is required to schedule an inspection. Please note you must call and speak with a Building Inspection Department representative a voicemail or email will not constitute an inspection please plan accordingly. Final occupancy inspections require coordination with multiple departments and staff members there for a minimum of 72 hour notice is required. Any re-inspection fees due must be paid prior to scheduling a re-inspection.

4. All contractors requiring permits shall not commence work until permit issuance. We have 10 business days to review and issue permits please plan accordingly.

5. We inspect to the 2009 IBC, IEBC, IMC, IECC, IFGC, 2003 ANSI A117.1, 2011 NEC and WI. Plumbing code SPS 381-386.

6. All state approved drawing must be available at job site for inspector review.

7. Please submit emergency egress path / lighting plan and energy compliance worksheets form SBD 10512 to Building Inspection Department prior to issuance of building permit.

8. Fire alarm systems require two permits from both the Fire Department and Building Inspection Department.

9. Any building fire protection loop and combination water main will require approval by the Fire Department prior to issuance of exterior plumbing permit.

10. Both fire alarm systems and fire protection loops will require inspections by both the Fire Department and Building Inspection Department.

11. VOPP recommends all exterior lot and building lighting to be LED and Dark Sky compliant with a color temperature between 4000K-5000K.

12. Any tradesmen requiring state license will be “carded” on the jobsite for compliance.

13. All equipment must be “LISTED” by a nationally recognized testing laboratory.

14. Documentation must be provided for available fault current at equipment, to verify short circuit current rating compliance per 2011 NEC 110.10

15. All equipment, materials, etc. must be rated for the environment in which they will be used.

16. All required DNR and FEMA permits must be approved, in addition plans must be state approved, prior to issuance of any VOPP building permits.

ORDINANCE # 15-___

ORDINANCE TO AMEND APPENDIX C SPECIFIED DEVELOPMENT PLANS #27 of CHAPTER 420 FOR THE ULINE CORPORATE CAMPUS PLANNED UNIT DEVELOPMENT THE PURSUANT TO CHAPTER 420-137 OF THE VILLAGE ZONING ORDINANCE FOR THE ULINE CORPORATE CAMPUS IN THE VILLAGE OF PLEASANT PRAIRIE, KENOSHA COUNTY, WISCONSIN

BE IT ORDAINED by the Village Board of Trustees of the Village of Pleasant Prairie, Kenosha County, Wisconsin, that the following PUD Ordinance is hereby amended for Uline Corporate Campus pursuant to Chapter 420-137 of the Village Zoning Ordinance to read as follows:

27. Uline Corporate Campus Planned Unit Development

a. Purpose and intent. The Uline Corporate Campus will provide for structures, improvements and uses on the property as legally described below that are in conformity with the Village of Pleasant Prairie adopted Comprehensive Land Use Plan and with the basic underlying M-1, Limited Manufacturing District zoning with the goal of facilitating development in a fashion that will not be contrary to the general health, safety, economic prosperity, and welfare of the Village, with the additional goal of encouraging proper maintenance of the structures, landscaping, parking areas, lighting, signage and general site development so as to promote an attractive and harmonious corporate campus, and seek to achieve a sustained desirability and economic stability and will seek to avoid unreasonable adverse effects to the property values of the surrounding properties. The development of the Uline Corporate Campus presents a specific benefit to the Village of Pleasant Prairie because it provides an catalyst for future corporate office development that will provide diverse and sustainable economic development potential for Kenosha County.

Legal Description: The property is known as Lot 1 of Certified Survey Map #2679 as recorded at the Kenosha County Register of Deeds Office on November 22, 2010 as Document #1633220 and located in U.S. Public Land Survey Section 25, Township 1 North, Range 21 East in the Village of Pleasant Prairie and herein after referred to as the "DEVELOPMENT". ~~(***Exhibit A***).~~

b. (***Exhibit A***).

c. Requirements within the DEVELOPMENT:

(i) The DEVELOPMENT shall be in compliance with all Federal, State, County and Village ordinances and regulations except as expressly modified in subsection (d) below.

(ii) The DEVELOPMENT shall be in compliance with the Dedication and Easement Provisions and Restrictive Covenants as specified on Certified Survey Map #2634. ~~(**Exhibit A**).~~

(iii) The DEVELOPMENT shall be in compliance with the PrairieWood Corporate Park Declaration of Development Standards and Protective Covenants, as may be amended from time to time, as recorded at the Kenosha County Register of Deeds Office on November 27, 2001 as Document #1244390.

(iv) The DEVELOPMENT, including but not limited to, the building(s), accessory structure(s), sign(s), landscaping, walking trail, parking lot(s), exterior site lighting, etc., and the site as a whole, shall be maintained in a neat,

presentable, aesthetically pleasing, structurally sound and non-hazardous condition.

(v) The DEVELOPMENT shall be in compliance with all Village of Pleasant Prairie conditionally approved Site and Operational Plans and Village Ordinance requirements.

(vi) All buildings/structures and all exterior additions, remodeling or alterations to the existing buildings/structures or to any future buildings/structures within the DEVELOPMENT shall be constructed of the same or complimentary exterior materials, colors and architectural style to ensure a unified development, including signage, lighting, landscaping, etc. No material alterations or modification to these colors or materials shall be made without the approval of the Village staff and/or Village Plan Commission and/or Village Board of Trustees.

(vii) The DEVELOPMENT shall be operated and maintained in a uniform manner, regardless of property ownership. If the DEVELOPMENT is sold to another entity(s), the DEVELOPMENT shall continue to operate as a unified development and shall continue to comply with this PUD.

(viii) No additional land divisions shall be allowed within the DEVELOPMENT unless approved by the Village.

d. Specific Modifications to the Village Zoning Ordinance Regulations and Specific Requirements for the DEVELOPMENT:

(i) Section 420-123 F of the Village Zoning Ordinance shall be amended to as follows: Building number, height and area.

1. Number of Principal Buildings: Five principal buildings are allowed within the DEVELOPMENT including three Corporate Offices buildings and two warehouse/distribution buildings.

2. Number and Location of Accessory Buildings: One pump house **building located east of the distribution center and south of the corporate office building**, **one maintenance building located south of the distribution center, one conference center located south of the corporate office** and no more than four guard stations. A guard station is defined as a booth like building to house security staff in conjunction with guard gates and contains technology related to the controlled entry to the site.

3. Principal Building Height: The Corporate Office buildings shall be a minimum of 30 feet in height and the warehouse/distribution buildings shall not exceed 60 feet in height.

4. Maximum Accessory Building Height: **Pump house and guard stations** shall not to exceed 20 feet, the **conference center** shall not exceed 45 feet **and the maintenance building shall not exceed 24 feet.**

5. Principal Building Area: The minimum total area of the Corporate Offices within the DEVELOPMENT shall be 200,000 square feet. The

minimum total area of the distribution buildings within the DEVELOPMENT shall be 1,000,000 square feet.

6. Accessory Building Area: the pump house shall not to exceed 1,500 square feet, the maintenance building shall not exceed 12,000 square feet, the conference center shall not exceed 25,000 square feet and any guard or entrance station shall not exceed 500 square feet.

(ii) Section 420-123 G (6) related to separation distance between buildings is hereby created to read: The distance between any principal building and any detached accessory building on the site: 45 feet minimum.

(iii) Section 420-76 T of the Village Zoning Ordinance related to Primary Monument Signs is amended as follows:

1. One sign is required for said DEVELOPMENT.

2. A changeable copy sign, electronic changing message sign or electronic scrolling sign is permitted.

3. Maximum area: 450 square foot per face including the ashlar stone base and a 162 square foot per face internally illuminated sign display panel

4. Maximum height: 22 feet.

5. Minimum setback distance: 15 feet from any public street or highway right-of-way line.

6. Shall include the street address of the Corporate Office on the property (including the street number(s) and the name of the street).

7. Landscaping shall extend a minimum of five feet in every direction from the base or other support structure of the sign.

8. Shall be placed on a solid-appearing decorative base which supports a minimum of 75% of the horizontal dimension of the sign display. The base shall be constructed of materials complementary to the materials used in the corporate office building on the property where the sign is located. The height of the base area below the sign display shall not exceed 50% of the total sign height.

(iv) Section 420-76 Y of the Village Zoning Ordinance related to Secondary Monument Signs is amended as follows:

1. Maximum number: one sign permitted per entrance on the public street; however, if the Primary Monument sign is located at an entrance then a secondary monument sign is not allowed at that entrance.

2. The sign shall be located no more than 15 feet from a primary entrance driveway, as measured from the back of the curb of the driveway.

3. Maximum height: 7 feet

4. Minimum setback from any public street or highway right-of-way line: 15 feet.

5. Maximum area: 32 square feet per face

6. Landscaping: three feet in every direction from the sign base or other supporting structure.

7. May be illuminated.

8. Shall be placed on a solid-appearing decorative base which supports a minimum of 75% of the horizontal dimension of the sign display. The base shall be constructed of materials complementary to the materials used in the corporate office building on the property where the sign is located. The base may not exceed three feet in height beneath the sign display.

(v) Section 420-81 B (3) of the Village Zoning Ordinance related to the height of a Commercial fences is amended as follow: The fencing/screening wall surrounding the equipment yard shall not exceed the following requirements: the ornamental fence shall not exceed 15 feet in height and the precast panel screening wall shall not exceed 20 feet in height. The height shall include all elevations, including berms, above the overall standard grade of the property.

(vi) Section 420-57 H (2) (i) [4] of the Village Zoning Ordinance related to roofing materials that are visible to the public is amended as follows: Standing seam metal roofing on the corporate office and conference center buildings and as architectural features on all other buildings within the DEVELOPMENT.

(vii) Amendments

1. The PUD regulations for said DEVELOPMENT may be amended pursuant to Section 420-13 of the Village Zoning Ordinance.

2. For an amendment related to a particular parcel within the DEVELOPMENT, then the Owner(s) of said property requesting the change shall file the required application.

Adopted this _____ day of _____, 2015

VILLAGE OF PLEASANT PRAIRIE

ATTEST:

_____
John P. Steinbrink
Village President

_____
Jane M. Romanowski
Village Clerk
Posted: _____

___-Uline PUD amend

ORDINANCE #15-__

AN ORDINANCE TO AMEND SUBSECTION 420-131 I (1) (a) [1] OF THE VILLAGE OF PLEASANT PRAIRIE ZONING ORDINANCE, RELATING TO THE FPO, FLOODPLAIN OVERLAY DISTRICT FOR THE ULINE CONFERENCE CENTER

BE IT ORDAINED AND ESTABLISHED by the Village Board of Trustees of the Village of Pleasant Prairie, Kenosha County, Wisconsin, that Subsection 420-131 I (1) (a) [1] of the Village of Zoning Ordinance, relating to official floodplain maps and studies, is hereby amended to read as follows:

[1] FIRM Map Number 55059C0189D
Amended pursuant to FEMA LOMA Case _____ dated _____, 2015.

Adopted this _____ day of _____, 2015.

VILLAGE OF PLEASANT PRAIRIE

_____
John P. Steinbrink,
Village President

_____
Jane M. Romanowski
Village Clerk

Posted: _____

Published: _____
__-Uline Conference Center FPO amend

ORD. # 15-___

ORDINANCE TO AMEND THE OFFICIAL ZONING MAP
OF THE VILLAGE OF PLEASANT PRAIRIE
KENOSHA COUNTY, WISCONSIN
PURSUANT TO CHAPTER 420-13 OF THE VILLAGE ZONING ORDINANCE

BE IT ORDAINED by the Village of Pleasant Prairie Board of Trustees, Kenosha County, Wisconsin, that the Official Village Zoning Map is hereby amended as follows:

The Uline Conference Center property is located at 12675 104th Street in a part of U.S. Public Land Survey Section 25, Township 1 North, Range 21 East of the Fourth Principal Meridian, lying and being in the Village of Pleasant Prairie, Kenosha County, Wisconsin and is further identified as Tax Parcel Number *91-4-121-252-0203* and is hereby rezoned as follows: 1) to rezone the portion of the property being removed from the 100-year floodplain from the FPO, Floodplain Overlay District; and 2) to rezone the portion of the property wherein 100-year floodplain was created into the FPO District as shown and legally described on ***Exhibit 1***.

The Village Zoning Administrator is hereby directed to record this Zoning Map Amendment on the appropriate sheet of the Official Village Zoning Map and Appendix B in Chapter 420 of the Village Code of Ordinance shall be updated to include said amendment.

Adopted this ___ day of _____, 2015.

VILLAGE BOARD OF TRUSTEES

_____
John P. Steinbrink
Village President

ATTEST:

_____
Jane M. Romanowski, CMC
Village Clerk

Posted:_____

___-Uline Conference Center FPO

EXHIBIT 1

PROPOSED CONFERENCE CENTER

PROPOSED FLOODPLAIN BOUNDARY ADJUSTMENT

EXISTING H1 FACILITY

100 YR W.S.E. - 731.00 (CONTAINED IN BASIN

100 YR W.S.E. - 731.00 (CONTAINED IN BASIN

100 YR W.S.E. CONTAINED WITHIN CULVERT

100 YR W.S.E. CONTAINED WITHIN CULVERT

100 YR W.S.E. CONTAINED WITHIN DITCH

PROPERTY LINE

EXISTING FLOODPLAIN

PROPOSED FLOODPLAIN BOUNDARY ADJUSTMENT

SECTION LINE

EXISTING FLOODPLAIN
FEMA LOMR CASE # 08-05-2135P
DATED MAY 16, 2008

LOCATION MAP
SECTION 25, T1N, R21E
SCALE 1" = 1200'

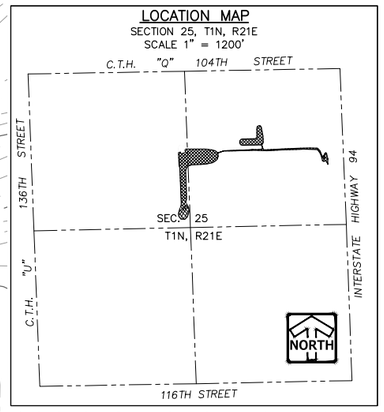

Line Table		
Line #	Direction	Length
L1	N19° 29' 46.58"E	0.12'
L2	N19° 29' 46.58"E	29.66'
L3	N4° 14' 44.40"E	36.19'
L4	N3° 19' 29.24"W	34.78'
L5	N25° 59' 24.63"W	19.80'
L6	N50° 50' 14.38"W	19.51'
L7	N76° 45' 11.99"W	19.07'
L8	S71° 02' 40.05"W	17.43'
L9	S47° 22' 38.25"W	18.42'
L10	S24° 14' 52.09"W	17.29'
L11	S8° 30' 40.54"W	33.07'
L12	S1° 27' 20.80"W	39.55'
L13	S8° 38' 14.13"E	38.27'
L14	S18° 42' 09.07"E	30.48'
L15	S20° 16' 42.96"E	20.45'
L16	S7° 06' 49.47"W	132.45'
L17	S15° 45' 18.48"W	57.70'
L18	S2° 00' 20.11"E	472.41'
L19	S12° 08' 01.57"W	53.07'
L20	S42° 59' 49.84"W	43.98'
L21	S69° 20' 13.11"W	61.71'
L22	S87° 28' 15.57"W	162.12'
L23	S86° 07' 24.77"W	61.63'
L24	S83° 11' 58.86"W	54.39'
L25	S77° 27' 34.06"W	56.57'
L26	S72° 18' 41.06"W	31.98'
L27	S60° 03' 40.51"W	58.14'
L28	S45° 16' 07.64"W	35.70'
L29	S16° 25' 15.24"W	48.51'
L30	S4° 11' 17.15"E	60.37'
L31	S72° 23' 03.15"W	104.15'
L32	S89° 39' 52.87"W	104.49'
L33	S88° 17' 31.74"W	427.03'
L34	N87° 44' 28.82"W	198.93'
L35	S87° 08' 52.13"W	292.63'

Line Table		
Line #	Direction	Length
L36	S88° 07' 15.52"W	287.53'
L37	S84° 41' 59.96"W	37.14'
L38	N88° 46' 03.59"W	240.29'
L39	N55° 55' 03.15"W	10.26'
L40	N38° 47' 49.69"W	24.49'
L41	N33° 17' 16.91"W	32.40'
L42	N24° 00' 33.95"W	69.67'
L43	N12° 54' 32.21"W	35.91'
L44	N18° 21' 24.52"W	25.48'
L45	N2° 03' 35.87"W	9.85'
L46	N15° 16' 38.66"W	4.00'
L47	N38° 45' 48.96"W	4.58'
L48	N68° 32' 52.93"W	13.44'
L49	N40° 26' 16.09"W	7.81'
L50	N47° 44' 30.66"W	6.46'
L51	S42° 58' 18.65"W	17.57'
L52	S85° 29' 04.41"W	11.94'
L53	N68° 18' 51.19"W	18.98'
L54	N37° 10' 55.94"W	17.27'
L55	N21° 59' 31.32"W	15.09'
L56	N24° 06' 48.65"W	26.67'
L57	S1° 53' 28.20"E	31.91'
L58	S3° 44' 30.70"E	28.43'
L59	S6° 09' 21.56"W	17.29'
L60	S15° 52' 13.80"W	2.68'
L61	S0° 50' 02.53"W	11.55'
L62	S0° 59' 27.03"E	11.87'
L63	S45° 17' 44.29"E	14.00'
L64	S8° 06' 49.39"E	56.11'
L65	S18° 45' 55.61"E	19.38'
L66	S37° 29' 22.92"E	8.89'
L67	S53° 13' 21.10"E	5.77'
L68	N86° 25' 53.15"E	4.10'
L69	N42° 15' 54.23"E	14.91'
L70	N33° 02' 05.76"E	24.81'

Line Table		
Line #	Direction	Length
L71	N1° 52' 32.66"E	3.76'
L72	N12° 10' 15.90"W	5.68'
L73	N4° 35' 18.02"W	6.69'
L74	N16° 30' 27.99"W	21.07'
L75	S62° 30' 21.29"E	5.98'
L76	S39° 36' 46.52"E	10.86'
L77	S44° 07' 28.27"E	12.07'
L78	N44° 07' 26.50"E	8.41'
L79	N28° 15' 56.08"W	19.45'
L80	N32° 45' 59.62"W	28.87'
L81	N10° 56' 09.60"W	3.13'
L82	N22° 54' 38.95"E	3.93'
L83	N42° 07' 02.27"E	11.30'
L84	S85° 42' 19.85"E	3.05'
L85	S43° 25' 10.64"E	5.36'
L86	S27° 44' 01.91"E	22.29'
L87	S35° 52' 38.76"E	23.14'
L88	S20° 33' 51.15"E	100.38'
L89	S41° 14' 14.99"E	67.79'
L90	S88° 40' 18.63"E	135.78'
L91	N88° 20' 10.79"E	147.46'
L92	N88° 14' 08.97"E	289.32'
L93	N86° 54' 08.02"E	291.02'
L94	N86° 21' 10.70"E	41.15'
L95	S80° 23' 25.48"E	10.11'
L96	S41° 17' 23.77"E	10.11'
L97	S22° 19' 31.27"E	24.41'
L98	S19° 14' 22.07"E	58.63'
L99	S53° 48' 26.57"W	9.93'
L100	S37° 44' 37.42"W	14.46'
L101	S25° 51' 03.18"W	22.98'
L102	S0° 50' 16.77"E	48.40'
L103	S3° 09' 58.79"E	56.70'
L104	S10° 08' 29.91"E	47.45'
L105	S10° 29' 16.62"E	40.61'

Line Table		
Line #	Direction	Length
L106	S11° 17' 41.28"E	70.06'
L107	S30° 43' 37.81"E	27.55'
L108	S80° 00' 19.47"E	21.47'
L109	N62° 06' 49.88"E	35.20'
L110	N15° 14' 35.21"E	28.82'
L111	N1° 17' 00.80"E	55.66'
L112	N0° 33' 54.92"W	50.47'
L113	N2° 22' 33.36"W	47.50'
L114	N47° 47' 51.49"E	37.90'
L115	N89° 00' 21.14"E	164.87'
L116	N86° 37' 32.80"E	53.61'
L117	N75° 02' 11.49"E	29.28'
L118	N36° 17' 12.21"E	29.38'
L119	N4° 31' 53.70"E	30.06'
L120	N26° 41' 37.47"W	37.04'
L121	N69° 00' 18.74"W	31.79'
L122	S89° 13' 45.61"W	126.66'
L123	S88° 40' 48.32"W	64.78'
L124	S87° 15' 55.32"W	104.17'
L125	N84° 53' 53.89"W	22.26'
L126	S71° 41' 47.07"W	9.13'
L127	N19° 14' 22.07"W	49.50'
L128	N9° 04' 47.02"E	12.70'
L129	N43° 30' 55.64"E	12.95'
L130	N70° 23' 33.98"E	29.40'
L131	N86° 07' 26.73"E	41.89'
L132	S89° 38' 38.30"E	37.22'
L133	N86° 29' 54.05"E	25.54'
L134	S82° 20' 22.37"E	21.29'
L135	N84° 40' 41.71"E	65.36'
L136	N88° 05' 36.33"E	325.64'
L137	N85° 43' 00.38"E	98.55'
L138	N71° 54' 26.93"E	121.59'
L139	S29° 39' 03.31"E	31.14'
L140	S57° 28' 00.59"E	24.62'

Line Table		
Line #	Direction	Length
L141	S76° 29' 28.72"E	61.06'
L142	S81° 59' 18.98"E	47.42'
L143	S84° 42' 58.34"E	54.86'
L144	S89° 16' 51.92"E	65.00'
L145	S89° 59' 43.61"E	264.00'
L146	S54° 24' 45.06"E	0.88'
L147	N72° 35' 52.48"E	30.43'
L148	N13° 31' 10.64"W	4.13'
L149	N14° 18' 16.72"W	64.00'
L150	N75° 41' 41.00"E	80.00'
L151	S14° 18' 16.72"E	30.93'
L152	N76° 19' 08.05"E	34.40'
L153	N2° 22' 16.83"W	201.84'
L154	N14° 36' 17.45"W	48.63'
L155	N2° 25' 57.44"W	768.55'

NORTH

GRAPHICAL SCALE (FEET)

0 1" = 200' 400'

ULINE CONFERENCE CENTER FLOODPLAIN BOUNDARY ADJUSTMENT

07/10/2015

PINNACLE ENGINEERING GROUP

5850 W. BLUEMOUND ROAD | SUITE 210 | BROOKFIELD, WI 53005 | WWW.PINNACLE-ENGR.COM |

PLAN | DESIGN | DELIVER

PEG JOB# 119.80

RECEIVED

PLEASANT PRAIRIE

VILLAGE OF PLEASANT PRAIRIE
SITE AND OPERATIONAL PLAN
AND CONDITIONAL USE PERMIT ZONING APPLICATION

USE THIS FORM FOR:
Tenants/Use changes proposing to occupy 50% or more of an existing commercial/industrial building.

To construct a **new** or addition to principal or accessory structure.

Use requires a Conditional Use Permit.

FOR OFFICE USE ONLY
Application Filed on 7/10 20 15
Preliminary Determination of Completeness on: 7/13 20 15
Revised Plans Submitted: 20
Public Hearing Required: Hearing Date: , 20
Published on: and , 20 Notices sent on: , 20
Approved by Plan Commission on 20
Zoning Administrator on 20
Denied by Plan Commission on 20
Zoning Administrator on 20

SECTION 1: GENERAL INFORMATION

NAME OF BUSINESS: Uline

SITE ADDRESS: 12575 Uline Drive, Pleasant Prairie, WI 53158

BRIEF PROJECT DESCRIPTION:
Uline Conference Center - Multifunction space w/ partial basement and exterior deck

PROPOSED NUMBER OF FULL TIME EMPLOYEES: No new employees

PROPOSED NUMBER OF PART-TIME EMPLOYEES: No new employees

SITE SIZE: _____ **sq. ft.** _____ **acres**

PROPOSED BUILDING SIZE: 16,340 **sq.ft. HEIGHT:** 35 **ft.**

PROPOSED ADDITION SIZE: _____ **sq.ft. HEIGHT:** _____ **ft.**

LEGAL DESCRIPTION: See attached CSM

TAX PARCEL NUMBER(S) : 91-4-121-252-0203

CURRENT ZONING CLASSIFICATION(S) OF THE PROPERTY: _____

1. **Is a zoning map amendment proposed with this project?** ☐ **Yes** ☒ **No**
   - **If yes**, proposed Zoning Classification(s): _____
2. **Is a zoning text amendment proposed with this project?** ☒ **Yes** ☐ **No**
   - **If yes**, provide a copy of the proposed text amendment with this application

3. **If property is zoned M-1 or M-2, indicate the Occupancy Type pursuant to the Use and Occupancy Classification specified in Chapter 3 of the 2006 International Building Code (2006 IBC). Include all that apply and associated square footage for each classification:**

☐ **Factory Group F-1 (Moderate-hazard)**	_____	sq ft
☐ **Factory Group F-2 (Low-hazard)**	_____	sq ft
☐ **Storage Group S-1 (Moderate-hazard)**	_____	sq ft
☐ **Storage Group S-2 (Low-hazard)**	_____	sq ft
☐ **Business Group B**	_____	sq ft
☐ **High-Hazard Group H***	_____	sq ft
☒ **Other** Assembly	16,340	sq ft
☐ **Other** _____	_____	sq ft

If Use and Occupancy Classification is High-Hazard Group H please provide a detailed written narrative that explains the specific use, quantity of storage and handling of the high hazard materials along with appropriate MSSD sheets with this application.

PUBLIC SERVICES:

1. **Is the property serviced by Public Sanitary Sewer?** ☒ **YES** ☐ **NO**
   - **If no,** the closest public sewer is located at _____
2. **Is the property serviced by Public Water?** ☒ **YES** ☐ **NO**
   - **If no,** the closest public water is located at _____
3. **Maximum number of gallons/minute of water expected to be used per day is:** X .

THIS APPLICATION IS FOR A: (check one)

☐ **Preliminary Site and Operational Plan:** An applicant may apply for preliminary site and operational plan approval in connection with an erosion control permit application for early mass grading, or in connection with an early foundation permit, or for other good cause shown

☐ **New Site and Operational Plan**

☒ **Amendment to an existing Site and Operational Plan**

- **Date of initial site and operational plan approval:** _____
- **Date of each approved amendment:** _____

SECTION 2: EXISTING USES AND BUILDINGS ON THE SITE

Are there any existing buildings on the site? ☒ **YES** ☐ **NO**

- **If yes**, provide an attachment that explains the current uses on the property and current uses in each building and if the use(s) is proposed to continue; and the gross floor area and height of each building.
- **If no**, what is the current use of the property? _____

SECTION 3: PHOTOGRAPHS

Standard-sized photographs (not Polaroid) showing all aspects of the site (e.g. locations of proposed improvements, bodies of navigable water, wetlands, wooded areas, etc.) and of the exterior of structures or other site improvements, together with a statement regarding each photograph, which includes the date the photograph was taken, the location from which it was taken, the direction in which the camera was pointed, and a description of what is shown in the photograph. With respect to all existing signs, the applicant shall file photographs of all existing signs and shall specify in the written statement accompanying each such photograph and show the dimensions of such sign. Digital images are acceptable.

SECTION 4: CONDITIONAL USE

1. **Does the proposed project require a Conditional Use Permit? ☐ YES ☒ NO**
   - **If no** then skip to Section 5.
   - **If yes**, then continue with this Section.
2. **Are you amending an existing Conditional Use Permit? ☐ YES ☒ NO**
   - **If yes**, provide a copy of the Conditional Use Grant Document you are proposing to amend.
   - **If no**, continue with this Section.
3. If you answered **YES** to either question 1 or 2 above then this application shall include information as to how the proposed project will not impair an adequate supply of light and air to adjacent properties; increase danger of fire; cause traffic congestion or traffic circulation problems; create storm water flooding or drainage; create obnoxious odors, problems or otherwise endanger the public health, safety or welfare; will not hinder, harm or distract the provision of public services; and that the proposed project is not inherently inconsistent with either the district in which it is located or adjoining districts or neighborhoods as required pursuant to the Village Zoning Ordinance.

SECTION 5: NON-CONFORMING USE

1. **Is any use on the site a nonconforming use? ☐ YES ☒ NO**
   - **If no**, then skip to Section 7.
   - **If yes**, then continue with this section.
2. If you answered **YES** to question 1 above, prima facie proof of each element of legal nonconforming use status shall be submitted to the Village with this application (i.e. that the nonconforming use was legal in its inception, that the use was active and actual and not merely casual, occasional, incidental or accessory when it became nonconforming, that the use has been continuous with no gap of 12 or more consecutive months since it became nonconforming, that no building or structure housing the nonconforming use has been structurally repaired or altered to the extent of fifty (50) percent or more of its assessed value since the use became nonconforming, and that the use has not been changed in nature or physically extended or expanded since becoming nonconforming).

SECTION 6: PERFORMANCE STANDARDS

Pursuant to the Village Zoning Ordinance, any application for a permit under this ordinance or any use subject to the regulations and standards set forth in the Village Zoning Ordinance shall be accompanied by a sworn statement by the owner of the subject property that said property and use will be operated in accordance with the performance standards set forth in Section 420-38 of the Village Ordinance. Continued compliance with the regulations and standards is required. Violations of such standards shall remedied as required by the Village Zoning Ordinance.

No land or building in any district shall be operated in such a manner so as to create any dangerous, injurious, noxious or otherwise objectionable fire, explosive or other hazard; noise or vibration, smoke, dust, dirt or other form of air pollution; water pollution; electrical, radioactive or other disturbances; glare; or other substance, condition or element (referred to herein as "dangerous or objectionable elements") in such amount as to adversely affect the surrounding area or premises; provided that any use permitted by this ordinance may be undertaken and maintained if it conforms to the regulations of this subsection limiting dangerous and objectionable elements at the specified point or points of the determination of their existence.

The Village may require additional information be submitted to ensure that the Village Performance Standards are being met.

SECTION 7: PLAN COMPONENTS

The application shall include a list of all documents, materials or information that are attached to and a part of the application form. Submit eight (8) full-sized and one (1) set reduced to 11" x 17" of all plans and other attachments shall be included as part of this application, except if a component has been waived or deferred in writing by the Village Zoning Administrator. **For specific details related to each of the required information and plans see the attachment entitled "*Plan Components and Related Standards*" in Section 420-57 of the Village Zoning Ordinance.**

- ☒ Application—Applicant, Site, Use, Project and Plan Information
- ☒ Application fee
- ☒ Operational plan
- ☒ Title sheet
- ☒ Survey
- ☒ Site plan
- ☒ Grading and drainage plan
- ☒ Building and fire protection plans
- ☒ Lighting plan
- ☒ Landscape and open space plan
- ☐ Signage plan
- ☒ Industrial/commercial waste survey
- ☒ Performance standards compliance
- ☒ Additional requirements, as determined by the Village Zoning Administrator, other appropriate Village staff members, or the Village Plan Commission, as appropriate.

Two or more plans may be combined, provided that all of the information submitted on the combined plan is clearly legible, but in no case shall the combined plans fail to show any of the information required for each individual plan as described below, unless such information is waived or deferred pursuant to the Zoning Ordinance.

SECTION 8: SIGNATURES

I,(We), hereby certify that all the above statements and all attachments submitted herewith are true and correct to the best of my knowledge. In addition I, (we) understand the requirements and procedures for Site and Operational Plan/Conditional Use Permit approval.

PROPERTY OWNER:

Name: Randy Copenharve
(Please Print)
Signature:
Address: 12575 ULINE DRIVE,
PLEASANT PRAIRIE, WI 53158
(City) (State) (Zip)
Phone: (262) 612-4200
Fax:
E-mail: RCopenharve@uline.com
Date 7/10/15

APPLICANT:

Name: Randy Copenharve
(Please Print)
Signature:
Address 12575 ULINE DRIVE,
PLEASANT PRAIRIE, WI 53158
(City) (State) (Zip)
Phone: (262) 612-4200
Fax:
E-mail: RCopenharve@uline.com
Date: 7/10/15

Is the applicant the owner of the property? ❑ YES ❑ NO

If no, then either proof of the applicant's legal interest in the subject real property (e.g. accepted offer to purchase, lease, etc., which may be appropriately redacted to preserve confidential information) or written authorization signed by the owner for the applicant to act as the owner's agent in connection with the application shall be included with the application.

DEVELOPER (if Applicable)

Name:
(Please Print)
Signature:
Address:
(City) (State) (Zip)
Phone:
Fax:
E-mail:
Date

USER OR OCCUPANT OF SITE:

Name: Randy Copenharve
(Please Print)
Signature:
Address 12575 ULINE DRIVE,
PLEASANT PRAIRIE, WI 53158
(City) (State) (Zip)
Phone: (262) 612-4200
Fax:
E-mail: RCopenharve@uline.com
Date: 7/10/15

Jean M. Werbie-Harris

Village of Pleasant Prairie

Community Development Director

Village Planner and Zoning Administrator

9915 39th Avenue

Pleasant Prairie, WI 53158

July 10, 2015

RE: Uline Conference Center – FINAL Operational Plan

PLEASANT PRAIRIE

Ms. Werbie-Harris;

It is with great pleasure we present to you the final operational plan for the new Uline Conference Center located in the current Uline Campus. We strongly feel that this new facility will be a significant enhancement to our growing campus and of great benefit to Uline Associates, business partners, welcomed guests, and the Pleasant Prairie community at large. Noted below is the commentary pursuant The Village of Pleasant Prairie operational plan requirements.

Building Description:

The new conference center facility will be used to support special events on the Uline campus that cannot be held in an existing space due to gathering specific requirements. The two-level building is sited within the Uline campus and directly abuts an existing detention pond. The exterior is clad in high-quality materials that include; stone masonry, specialty colored concrete, metal roof, and features a significant amount of glazing and an attached deck that extends over the water.

Operational Items:

- The gross square footage of the building will consist of 22,500 sq. ft. spread over two levels.
- The Facility will not be open to the public and will only be used on average of once per week. Activities will include; corporate meetings, conferences, and events with approximately 200 to 300 attendees. Events at the conference center will be held in the morning, afternoon, and evenings, weekdays and weekends. There will not be regular shipments other than those that support contracted vendors supplying the events (example; caterers, sound equipment, specialty lighting needs)
- No new employees will be hired to run the conference center, existing corporate staff will be utilized for events. Outside Vendors may provide event specific services.
- There will not be any shift related work associated with the Conference Center.
- The maximum number of employees will vary depending on event and support needs. When the facility is not in use, there will not be any staff on site.
- All events will vary in size however the maximum occupancy will be up to 350.
- The Conference Center is an ancillary building that does not require its own designated parking spaces. Parking for the building will be handled with the existing site parking.
- Parking requirements for all events will be met by the existing 800-stall parking lot at adjacent Uline office building. No new parking stalls are proposed.

- The Conference Center will not increase the number of automobile trips to the Uline Campus on a daily basis as it is not open to the general public. It is an amenity, not a destination. The maximum potential number of automobile trips is 350. This is based on the building's anticipated capacity for a large seated event and assumes all 350 people drive separately.
- There will not be any routine daily truck trips. For large events, there will be the potential of catering and equipment deliveries, but should not exceed 10 truck trips a day.
- Items stored on site will included but are not limited to; conference tables, chairs, audio equipment, dishware, flatware, projection equipment.
- There will not be any industrial or manufacturing machinery housed on site.
- Solid and liquid waste materials will include but are not limited to: food and associated food consumables, paper products.
- Waste will be disposed of via commercial waste hauler and disposed of in commercial dumpsters/ compactors.
- In addition to Village Police, Uline has full-time staff which will provide security of the facility.
- Uline has full-time staff which will provide landscaping, operation, and maintenance of the facility in conjunction with all maintenance vendors.
- The facility is within in the Uline Corporate Campus and does not have any direct neighbors or adjacent public facilities and will not pose any adverse impact to either.
- FEMA Floodplain will be impacted within the interior of the detention pond. Mitigation is proposed at the south end of the pond to provide additional storage to maintain current floodplain elevations. Floodplain will be contained on the Uline property and will not impact any adjacent properties.

We look forward to the competition of this outstanding addition to the Uline Campus and a continued successful partnership with the Village of Pleasant Prairie.

Regards,

Randy Copenharve

Uline

Return to: Katrina Karow
Kenosha Water Utility
4401 Green Bay Road
Kenosha, WI 53144
Email: kkarow@kenosha.org

Date Sent: 7/13/15 PH

Date Due: _____

VILLAGE OF PLEASANT PRAIRIE
INDUSTRIAL WASTE SURVEY

RECEIVED

To be submitted to the

Kenosha Water Utility

PLEASANT PRAIRIE

General Information

1. Facility Name: Uline Conference Center
2. Mailing Address: 12575 Uline Drive
3. City, State, Zip Code: Pleasant Prairie, WI 53158
4. Site Address: Village to assign address
5. Standard Industrial Classification Code (SIC): NA
6. Name, Title and Telephone Number of the Authorized Representative and the Company Contact Person Responsible for Environmental Compliance.

Authorized Representative	*Company Contact*
Name: Andrew Lasca (HGA)	Name: Randy Copenharve (Route 165, LLC)
Title:	Title:
Phone #: 1-414-278-3437	Phone #: 1-262-612-4200

The authorized representative must be a president, secretary, treasurer, or vice-president of the corporation in charge of a principle business function, or general partner or proprietor, or an individual designated by the aforementioned corporate official. The designated individual must meet the following criteria: (1) the person must be responsible for the overall operation of the facilities from which discharges originate, (2) the person is authorized in writing, and (3) the written authorization is submitted to the POTW.

7. List All Environmental Control Permits Held by or for the Facility.

Not Applicable

Operational Characteristics

1. Existing Number of Employees: NA Full Time _____ Part Time _____

2. Operational Schedule: Days/Wk NA Hours/Day _____ # Shifts _____

3. Describe the nature of the business conducted at this facility (if more than one type ,of business or manufacturing takes place, list all activities): _____

   This facility will be used for events and meeting. No additional employees will be hired. It is not intended for for daily use and will be used 15-25 times a year.

4. List principal raw materials used: Not Applicable

5. List products produced and the average rate of production: Not Applicable

6. List types of wastes created during production and any by-products produced: Not Applicable

7. Estimate the quantity of water to be used by the facility during a six month period. Record the gallons of water anticipated by this facility. 72,000 gallons.

   Indicate the source of the facility's water: Kenosha _____ Pleasant Prairie X

   Meter number or address assigned to water meter(s). _____

8. Type of discharges: Continuous _____ Batch X

   If batch was indicated, give the average frequency and approximate volume of any batch discharges: The volume will be approximately 90 gallons per batch. On average, the frequency will be every 30 minutes

9. Describe the uses of water at this facility: Used for domestic water in plumbing fixtures and as make up water for HVAC systems.

Wastewater Information

1. A process wastewater IS any wastewater discharged other than for sanitary, non-contact cooling or boiler blow-down purposes. List activities which generate a process wastewater and the time and duration of each discharge.

Wastewater Producing Process	Time and Duration of Discharges
None	

2. For each process wastewater stream list all the materials and pollutants which to believe may be present in the discharge.

Not Applicable.

3. Contact cooling water is cooling water that during the process comes into contact with process material, thereby becoming contaminated. Non-contact cooling water does not come into contact with process materials. Does this facility utilize cooling water? No

4. Water volume used and discharged to sanitary sewer. A review of previous water usage bills may be helpful in assigning values to the following flows. If sanitary flow is not metered, provide an estimate based on 20 gallons per day fir each employee (i.e. water balance).

	Gallons per Day		Type of Wastewater Discharge
	Consumed	Discharges	(Continuous, Batch, None)
Sanitary Usage	Max 5475	Max 5475	Batch
Process Wastewater Usage			
Cooling Water Usage			
Other Usage			
Total Volume			

5. Describe all locations where wastewaters enter the collection system

All plumbing fixtures including floor drains.

6. Is there a sampling manhole on site? No ____ Yes X

If yes, describe the locations: Located west of the new facility serving the sanitary waste lateral exiting the building.

7. Are sanitary and process wastewaters separated? No ____ Yes X

8. Is boiler blowdown water discharged to the sanitary sewer? No X Yes ____

9. Does your facility haul any process wastewater? No X Yes ____

Compliance Information

1. Is there any usage of toxic compounds at the facility? No X Yes ____

If yes, list and use check list on last page.

2. Are there any floor drains in the manufacturing or chemical storage area? No NA Yes ____

3. Is there a Spill Prevention Control and Countermeasure Plan in effect for this facility?

No X Yes ____ If yes, describe procedure: ____

5. Is any form of waste water pretreatment practiced at this facility? No X Yes _____

If yes, describe: _____

6. List any specific pretreatment standards that apply to this facility: Not Applicable.

7. If pretreatment standards are not being met on a consistent basis, describe what additional and maintenance or pretreatment must be performed to achieve compliance.

Not Applicable.

8. State the estimated timetable (compliance schedule) for the implementation of additional operations and maintenance or for the commencement and completion of major events leading to the construction and operation of the pretreatment facilities required to achieve compliance.

Not Applicable.

Submissions

Include a schematic (print) of the facility that shows the water intake points(s), existing sanitary sewer, discharge points (connection(s) to sanitary collection system), and direction of wastewater flows at the facility. Provide a diagram of water flow through any processes that use water for any purpose.

Signatory Requirement

I certify under penalty of law that this document and all attachments were prepared under my direction or supervision in accordance with a system designed to assure that qualified personnel properly gather and evaluate this information submitted. Based on my inquiry of the person or persons directly responsible for gathering the information, the information submitted is to the best of my knowledge and belief true, accurate and complete. I am aware that there are significant penalties for submitting false information, including the possibility of fine and imprisonment.

Andrew Lasca (HGA) |

Print Name: Authorized Representative | Signature: Authorized Representative

_____ | 07/10/2015

Title | Date

Appendix
Toxic Pollutants Listed in 40CFP 307(a)

Known Absent	Suspected Present	Known Present	Polluntant
			1 Acenaphthene
			2 Acrolein
			3 Acrylonitrile
			4 Aldrin/Dieldrin
			5 Antimony and compounds
			6 Arsenic and compounds
			7 Asbestos
			8 Benzene
			9 Benzidine
			10 Beryllium and compounds
			11 Cadmium and compounds
			12 Carbon tetrachloride
			13 Chlordane
			14 Chlorinated benzenes
			15 Chlorinated ethanes
			16 Chlorinalkyl ethers
			17 Chlorinated naphthalene
			18 Chlorinated phenols
			19 Chlorofoffi1
			20 2-chlorophenol
			21 Chromium and compounds
			22 Copper and compounds
			23 Cyanides
			24 DDT and metabolites
			25 Dichlorobenzenes
			26 Dichlorobenzidine
			27 Dichloroethylenes
			28 2,4-dichlorophenol
			29 Dichloropropane & Dichloropropene
			30 2,4-dimethylphenol
			31 Dinitrotoluene
			32 Diphenylhydrazine
			33 Endosulfan and metabolites

Known Absent	Suspected Present	Known Present	Polluntant
			34 Endrin and metabolites
			35 Ethylbenzene
			36 Fluoranthene
			37 Haloethers
			38 Halomethanes
			39 Heptachlor and metabolites
			40 Hexachlorobutadiene
			41 Hexachlorocyclopentadiene
			42 Hexachlorocyclohexane
			43 Isophrone
			44 Lead and compounds
			45 Mercury and compounds
			46 Naphthalene
			47 Nickel and compounds
			48 Nitrobenzene
			49 Nitrophenols
			50 Nitrosamines
			51 Pentachlorophenol
			52 Phenol
			53 Phthalate esters
			54 Polychlorinated biphenyls (PCBs)
			55 Polynuclear aromatic hydrocarbon
			56 Selenium and compounds'
			57 Silver and compounds
			58 2,3,7,8-Tetrachlorodibenzo- p-dioxin (TCDD)
			59 Tetrachloroethylene
			60 Thallium and compounds
			61 Toluene
			62 Toxaphene
			63 Trichloroethylene
			64 Vinyl chloride
			65 Zinc and compounds

ULINE CONFERENCE CENTER

CONSTRUCTION DOCUMENTS

ULINE
SHIPPING SUPPLY SPECIALISTS

ULINE CONFERENCE CENTER
12575 Line Drive
Pleasant Prairie, WI 53185

hga
Architecture | Engineering | Planning
Hammel, Green and Abrahamson, Inc.
333 East Erie Street
Milwaukee, Wisconsin USA 53202
Telephone 414.278.8200 Facsimile 414.278.7734

hga commission number: 3595-001-00
JULY 10, 2015

DRAWING INDEX

NUMBER	SHEET NAME
2-CIVIL	
C-1	COVER SHEET
C-2	EXISTING CONDITIONS
C-3	GRADING PLAN
C-4	EROSION CONTROL PLAN
C-5	UTILITY PLAN
C-6	CONSTRUCTION DETAILS
C-7	CONSTRUCTION DETAILS
3-LANDSCAPE	
L101	LANDSCAPE PLAN
L201	LANDSCAPE DETAILS

DRAWING INDEX

NUMBER	SHEET NAME
4-ARCHITECTURAL	
A010	GENERAL NOTES, ABBREVIATIONS AND SYMBOLS
A011	WALL TYPES, GENERAL NOTES & PARTITION NOTES
A020	LIFE SAFETY PLAN
A080	DOOR AND FRAME SCHEDULE
A090	ROOM FINISH SCHEDULE AND EQUIPMENT SCHEDULE
A200	LOWER LEVEL FLOOR PLAN
A201	LEVEL 1 FLOOR PLAN
A202	ROOF PLAN
A300	LOWER LEVEL RCP
A301	LEVEL 1 RCP
A400	EXTERIOR ELEVATIONS
A410	BUILDING SECTIONS
A420	WALL SECTIONS
A421	WALL SECTIONS
A422	WALL SECTIONS
A423	WALL SECTIONS
A470	EXTERIOR DETAILS
A471	EXTERIOR DETAILS
A500	ENLARGED STAIR AND ELEVATOR PLANS & SECTIONS
A501	ENLARGED BATHROOM PLANS AND ELEVATIONS
A601	INTERIOR ELEVATIONS
A610	INTERIOR DETAILS

DRAWING INDEX

NUMBER	SHEET NAME
6-STRUCTURAL	
S001	GENERAL STRUCTURAL NOTES AND ABBREVIATIONS
S002	GENERAL STRUCTURAL NOTES
S200	FOUNDATION PLAN
S200-R	MAT SLAB REINFORCING PLAN
S201	LEVEL 1 FRAMING PLAN
S202	ROOF FRAMING PLAN
S210	PARTIAL PLANS
S300	FRAME ELEVATIONS
S301	FRAME ELEVATIONS
S400	COLUMN SCHEDULE
S410	CONCRETE JOIST SCHEDULES AND DETAILS
S411	CONCRETE BEAM SCHEDULES
S500	TYPICAL FOUNDATION DETAILS
S501	FOUNDATION DETAILS
S510	TYPICAL ELEVATED CONCRETE DETAILS
S511	ELEVATED CONCRETE DETAILS
S512	ELEVATED CONCRETE DETAILS
S513	ELEVATED CONCRETE DETAILS
S700	TYPICAL STEEL SECTIONS AND DETAILS
S701	STEEL SECTIONS AND DETAILS
S702	SECTIONS AND DETAILS

DRAWING INDEX

NUMBER	SHEET NAME
7 - MECHANICAL	
M001	MECHANICAL SYMBOLS AND ABBREVIATIONS
M040	MECHANICAL SITE PLAN
M150	CUP MECHANICAL PLAN
M200	BASEMENT LEVEL MECHANICAL PLAN - DUCTWORK
M201	LEVEL 1 MECHANICAL PLAN - DUCTWORK
M300	BASEMENT LEVEL MECHANICAL PLAN - PIPING
M600	MECHANICAL SYSTEM DIAGRAMS - HOT WATER
M601	MECHANICAL SYSTEM DIAGRAMS - CHILLED WATER
M700	MECHANICAL DETAILS
M701	MECHANICAL DETAILS
M702	MECHANICAL DETAILS
M800	MECHANICAL SCHEDULES
M801	MECHANICAL SCHEDULES
M900	CONTROLS
M901	CONTROLS
M902	CONTROLS
M903	CONTROLS
M904	CONTROLS
M905	CONTROLS
M906	CONTROLS

DRAWING INDEX

NUMBER	SHEET NAME
8 - PLUMBING	
P001	PLUMBING SYMBOLS & ABBREVIATIONS
P040	PLUMBING SITE PLAN
P150	CUP PLUMBING PLAN
P199	FOUNDATION WASTE, VENT, AND STORM FLOOR PLAN
P200	LOWER LEVEL WASTE, VENT, AND STORM FLOOR PLAN
P201	LEVEL 1 WASTE, VENT, AND STORM FLOOR PLAN
P300	LOWER LEVEL DOMESTIC WATER FLOOR PLAN
P301	LEVEL 1 DOMESTIC WATER FLOOR PLAN
P500	SANITARY AND VENT ISOMETRIC
P600	DOMESTIC WATER ISOMETRIC
P700	PLUMBING DETAILS
P701	PLUMBING DETAILS
P800	PLUMBING SCHEDULES

DRAWING INDEX

NUMBER	SHEET NAME
9 - ELECTRICAL	
E000	COVER SHEET
E010	ELECTRICAL ONE LINE DIAGRAM
E030	ELECTRICAL SITE PLAN
E200	BASEMENT LEVEL LIGHTING PLAN OVERALL
E201	FIRST LEVEL LIGHTING PLAN OVERALL
E202	SECOND LEVEL LIGHTING PLAN OVERALL
E300	BASEMENT LEVEL POWER PLAN OVERALL
E301	FIRST LEVEL POWER PLAN OVERALL
E350	CUP ELECTRICAL PLAN
E400	BASEMENT LEVEL SYSTEMS PLAN OVERALL
E401	FIRST LEVEL SYSTEMS PLAN OVERALL
E500	ELECTRICAL SCHEDULE
E501	ELECTRICAL SCHEDULES
E530	LIGHTING CONTROL PANEL SCHEDULES
E601	ELECTRICAL DETAILS
Grand total: 100	

key plan:

7/10/2015 9:24:47 AM

© COPYRIGHT HAMMEL, GREEN AND ABRAHAMSON, INC.

THESE PLANS AND DESIGNS ARE COPYRIGHT PROTECTED AND MAY NOT BE USED IN WHOLE OR IN PART WITHOUT THE WRITTEN CONSENT OF PINNACLE ENGINEERING GROUP, LLC

www.pinnacle-engr.com

ONSITE CIVIL ENGINEERING INFRASTUCTURE PLANS

FOR

CONFERENCE CENTER AT ULINE CORPORATE CAMPUS

PLEASANT PRAIRIE, WISCONSIN

PLANS PREPARED FOR

ROUTE 165, LLC

12575 ULINE DRIVE
PLEASANT PRAIRIE, WI 53158

LEGEND

	EXISTING	PROPOSED
SANITARY MANHOLE	◎	◉
STORM MANHOLE	◎	◉
CATCH BASIN	○	●
INLET	□	■
PRECAST FLARED END SECTION	◁	◀
CONCRETE HEADWALL	◁	◀
VALVE VAULT	⊗	⊗
VALVE BOX	▪	▪
FIRE HYDRANT		
BUFFALO BOX	⊙	•
CLEANOUT	⊡	⊡
SANITARY SEWER		
FORCE MAIN		
STORM SEWER		
WATER MAIN	W	W
UTILITY CROSSING		X
GRANULAR TRENCH BACKFILL		
LIGHTING		
ELECTRICAL CABLE	E	E
ELECTRICAL TRANSFORMER OR PEDESTAL	E	E
POWER POLE		
POWER POLE WITH LIGHT		
GUY WIRE		
STREET SIGN		
GAS MAIN	G	G
TELEPHONE LINE	T	T
CONTOUR	749	749
SPOT ELEVATION	×(750.00)	×750.00
WETLANDS		
FLOODWAY		
FLOODPLAIN		
HIGH WATER LEVEL (HWL)		
NORMAL WATER LEVEL (NWL)		
DIRECTION OF SURFACE FLOW		
DITCH OR SWALE		
DIVERSION SWALE		
OVERFLOW RELIEF ROUTING		
TREE WITH TRUNK SIZE		
SOIL BORING	B-6	B-6
TOPSOIL PROBE	P-5	P-1
FENCE LINE, TEMPORARY SILT		
FENCE LINE, WIRE		
FENCE LINE, CHAIN LINK OR IRON		
FENCE LINE, WOOD OR PLASTIC		
CONCRETE SIDEWALK		
CURB AND GUTTER		
DEPRESSED CURB		
REVERSE PITCH CURB & GUTTER		
EASEMENT LINE		

ABBREVIATIONS

BL	BASE LINE	PT	POINT OF TANGENCY
C	LONG CHORD OF CURVE	PVI	POINT OF VERTICAL INTERSECTION
C & G	CURB AND GUTTER	R	RADIUS
CB	CATCH BASIN	ROW	RIGHT-OF-WAY
CL	CENTERLINE	SAN	SANITARY SEWER
D	DEGREE OF CURVE	ST	STORM SEWER
EP	EDGE OF PAVEMENT	T	TANGENCY OF CURVE
FF	FINISHED FLOOR	TB	TOP OF BANK
FG	FINISHED GRADE	TC	TOP OF CURB
FL	FLOW LINE	TF	TOP OF FOUNDATION
FP	FLOODPLAIN	TP	TOP OF PIPE
FR	FRAME	TS	TOP OF SIDEWALK
FW	FLOODWAY	TW	TOP OF WALK
HWL	HIGH WATER LEVEL	WM	WATER MAIN
INV	INVERT	△	INTERSECTION ANGLE
L	LENGTH OF CURVE		
MH	MANHOLE		
NWL	NORMAL WATER LEVEL		
PC	POINT OF CURVATURE		

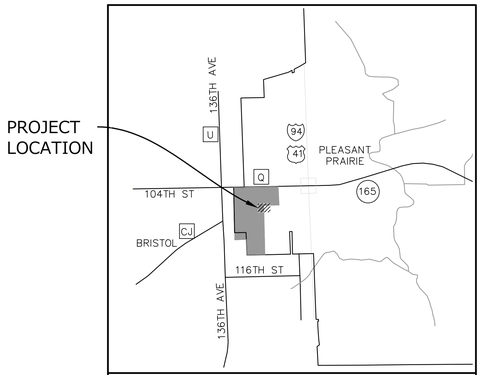

LOCATION MAP
NTS

INDEX OF SHEETS

C-1	COVER SHEET
C-2	EXISTING CONDITIONS
C-3	GRADING PLAN
C-4	EROSION CONTROL PLAN
C-5	UTILITY PLAN
C-6 - C-7	CONSTRUCTION DETAILS

PROJECT TEAM CONTACTS

CIVIL ENGINEER:
ADAM ARTZ, P.E.
PINNACLE ENGINEERING GROUP
15850 BLUEMOUND ROAD, SUITE 210
BROOKFIELD, WI 53005
(262) 754-8888

MATT CAREY, P.E.
PINNACLE ENGINEERING GROUP
15850 BLUEMOUND ROAD, SUITE 210
BROOKFIELD, WI 53005
(262) 754-8888

APPLICANT:
RANDY COPENHARVE
ROUTE 165, LLC
12575 ULINE DRIVE
PLEASANT PRAIRIE, WI 53158
(262) 612-4200

ARCHITECT:
ANDREW LASCA
HGA
333 EAST ERIE STREET
MILWAUKEE, WI 53202
(414) 278-7734

LANDSCAPING:
VANCE BARNES, P.L.A.
DAVID J. FRANK LANDSCAPE CONTRACTING
N120 W213450 FREUSTADT ROAD
GERMANTOWN, WI 53022
(262) 255-4888

BENCHMARKS

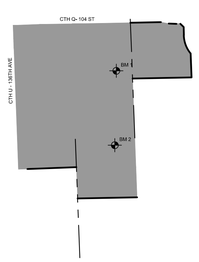

BM 1: TOP OF NW FLANGE BOLT- HYDRANT ELEVATION= 739.52

BM 2: TOP OF NW FLANGE BOLT- HYDRANT ELEVATION= 742.07

VERTICAL DATUM: NGVD 29
HORIZONTAL DATUM: NORTH AMERICAN DATUM OF 1927

GENERAL NOTES

1. THE INTENTION OF THE PLANS AND SPECIFICATIONS IS TO SET FORTH PERFORMANCE AND CONSTRUCTION MATERIAL STANDARDS FOR THE PROPER EXECUTION OF WORK. ALL WORKS CONTAINED WITHIN THE PLANS AND SPECIFICATIONS SHALL BE COMPLETED IN ACCORDANCE WITH ALL REQUIREMENTS FROM LOCAL, STATE, FEDERAL OR OTHER GOVERNING AGENCY'S LAWS, REGULATIONS, JURISDICTIONAL ORDINANCES/CODES/RULES/ETC., AND THE OWNER'S DIRECTION.
2. MULTIPLE GEOTECHNICAL EXPLORATION REPORTS HAVE BEEN PREPARED FOR THIS PROJECT. MOST RECENTLY BY PROFESSIONAL SERVICE INDUSTRIES (GEOTECHNICAL CONSULTANT) (DATED JUNE 04, 2014) AND TERRACON (DATED JUNE 07, 2010 I APRIL 08, 2008 I MAY 06, 2008). FOR THIS PROJECT SITE. THE DATE ON SUB-SURFACE SOIL CONDITIONS IS NOT INTENDED AS REPRESENTATION OR WARRANTY OF THE CONTINUITY OF SUCH CONDITIONS BETWEEN BORINGS OR INDICATED SAMPLING LOCATIONS. IT SHALL BE EXPRESSLY UNDERSTOOD THAT THE OWNER WILL NOT BE RESPONSIBLE FOR ANY INTERPRETATIONS OR CONCLUSIONS DRAWN THERE FROM BY THE CONTRACTOR. DATE IS MADE AVAILABLE FOR THE CONVENIENCE OF THE CONTRACTOR, THE CONTRACTOR IS RESPONSIBLE FOR PERFORMING ANY ADDITIONAL SOILS INVESTIGATIONS THEY FEEL IS NECESSARY FOR THE PROPER EVALUATION OF THE SITE FOR PURPOSES OF PLANNING, BIDDING OR CONSTRUCTING THE PROJECT AT NO ADDITIONAL COST TO THE OWNER.
3. THE CONTRACTOR IS RESPONSIBLE TO REVIEW AND UNDERSTAND ALL COMPONENTS OF THE PLANS AND SPECIFICATIONS, INCLUDING FIELD VERIFYING SOIL CONDITIONS, PRIOR TO SUBMISSION OF A BID PROPOSAL.
4. THE CONTRACTOR SHALL PROMPTLY REPORT ANY ERRORS OR AMBIGUITIES LEARNED AS PART OF THEIR REVIEW OF PLANS, SPECIFICATIONS, REPORTS AND FIELD INVESTIGATIONS.
5. THE CONTRACTOR IS SOLELY RESPONSIBLE FOR THE COMPUTATION OF QUANTITIES AND WORK REQUIRED TO COMPLETE THIS PROJECT. THE CONTRACTOR'S BID SHALL BE BASED ON ITS OWN COMPUTATIONS AND IN NO SUCH INSTANCE RELY ON THE ENGINEER'S ESTIMATE.
6. QUESTIONS/CLARIFICATIONS WILL BE INTERPRETED BY ENGINEER/OWNER PRIOR TO THE AWARD OF CONTRACT. ENGINEER/OWNER WILL SUBMIT OFFICIAL RESPONSES IN WRITING. INTERPRETATIONS PRESENTED IN OFFICIAL RESPONSES SHALL BE BINDING ON ALL PARTIES ASSOCIATED WITH THE CONTRACT. IN NO WAY SHALL WORD-OF-MOUTH DIALOG CONSTITUTE AN OFFICIAL RESPONSE.
7. PRIOR TO START OF WORK, CONTRACTOR SHALL BE COMPLETELY FAMILIAR WITH ALL CONDITIONS OF THE SITE, AND SHALL ACCOUNT FOR CONDITIONS THAT AFFECT, OR MAY AFFECT CONSTRUCTION INCLUDING, BUT NOT LIMITED TO, LIMITATIONS OF WORK ACCESS, SPACE LIMITATIONS, OVERHEAD OBSTRUCTIONS, TRAFFIC PATTERNS, LOCAL REQUIREMENTS, ADJACENT ACTIVITIES, ETC. FAILURE TO CONSIDER SITE CONDITIONS SHALL NOT BE CAUSE FOR CLAIM OF JOB EXTRAS.
8. COMMENCEMENT OF CONSTRUCTION SHALL EXPLICITLY CONFIRM THAT THE CONTRACTOR HAS REVIEWED THE PLANS AND SPECIFICATIONS IN ENTIRETY AND CERTIFIES THAT THEIR SUBMITTED BID PROPOSAL CONTAINS PROVISIONS TO COMPLETE THE PROJECT, WITH THE EXCEPTION OF UNFORESEEN FIELD CONDITIONS. ALL APPLICABLE PERMITS HAVE BEEN OBTAINED, AND CONTRACTOR UNDERSTANDS ALL OF THE REQUIREMENTS OF THE PROJECT.
9. SHOULD ANY DISCREPANCIES OR CONFLICTS IN THE PLANS OR SPECIFICATIONS BE DISCOVERED AFTER THE AWARD OF CONTRACT, ENGINEER SHALL BE NOTIFIED IN WRITING IMMEDIATELY AND CONSTRUCTION OF ITEMS AFFECTED BY THE DISCREPANCIES/CONFLICTS SHALL NOT COMMENCE, OR CONTINUE, UNTIL A WRITTEN RESPONSE FROM ENGINEER/OWNER IS DISTRIBUTED. IN THE EVENT OF A CONFLICT BETWEEN REFERENCED CODES, STANDARDS, SPECIFICATIONS AND PLANS, THE ONE ESTABLISHING THE MOST STRINGENT REQUIREMENTS SHALL BE FOLLOWED.
10. THE CONTRACTOR SHALL, AT ITS OWN EXPENSE, OBTAIN ALL NECESSARY PERMITS AND LICENSES TO COMPLETE THE PROJECT. OBTAINING PERMITS, OR DELAYS, IS NOT CAUSE FOR DELAY OF THE CONTRACT OR SCHEDULE. CONTRACTOR SHALL COMPLY WITH ALL PERMIT REQUIREMENTS.
11. THE CONTRACTOR SHALL NOTIFY ALL INTERESTED GOVERNING AGENCIES, UTILITY COMPANIES AFFECTED BY THIS CONSTRUCTION PROJECT, AND DIGGER'S HOTLINE IN ADVANCE OF CONSTRUCTION TO COMPLY WITH ALL JURISDICTIONAL ORDINANCES/CODES/RULES/ETC., PERMIT STIPULATIONS, AND OTHER APPLICABLE STANDARDS.
12. SAFETY IS THE SOLE RESPONSIBILITY OF THE CONTRACTOR. THE CONTRACTOR SHALL BE RESPONSIBLE TO INITIATE, INSTITUTE, ENFORCE, MAINTAIN, AND SUPERVISE ALL SAFETY PRECAUTIONS AND JOB SITE SAFETY PROGRAMS IN CONNECTION WITH THE WORK.
13. CONTRACTOR SHALL KEEP THE JOBSITE CLEAN AND ORDERLY AT ALL TIMES. ALL LOCATIONS OF THE SITE SHALL BE KEPT IN A WORKING MANNER SUCH THAT DEBRIS IS REMOVED CONTINUOUSLY AND ALL RESPECTIVE CONTRACTORS OPERATE UNDER GENERAL "GOOD HOUSEKEEPING."
14. THE CONTRACTOR SHALL INDEMNIFY THE OWNER, ENGINEER, AND THEIR AGENTS FROM ALL LIABILITY INVOLVED WITH THE CONSTRUCTION, INSTALLATION, AND TESTING OF THE WORK ON THIS PROJECT.
15. PRIOR TO CONSTRUCTION A PRE-CONSTRUCTION MEETING MUST BE HELD AT THE VILLAGE OFFICES. THE PRE-CONSTRUCTION MEETING SHALL BE SCHEDULED AND MODERATED BY THE DESIGN ENGINEER OF RECORD.

REQUIRED SUBMITTALS FOR APPROVAL

1. **HOT MIX ASPHALT** - MIX DESIGN
2. **CONCRETE PAVEMENTS (EXTERIOR)** - MIX DESIGN & JOINT PLAN
3. **PAVEMENT STONE BASE COURSE** - GRADATION
4. **PIPE BEDDING & TRENCH BACKFILL** - GRADATION
5. **MANHOLE BACKFILL** - GRADATION
6. **PAVEMENT MARKING PAINT**
7. **CHEMICAL SOIL STABILIZATION MIX DESIGN** (IF APPLICABLE)

REQUIRED SUBMITTALS FOR RECORDS

1. WATER MAIN PIPES, VALVES, HYDRANTS & FITTINGS
2. SANITARY SEWER PIPE & FITTINGS
3. STORM SEWER PIPE, STRUCTURES, & FITTINGS
4. TRACER WIRE
5. UNDERGROUND UTILITY LOCATION RECORD DRAWINGS
6. ADA SIGN & TRUNCATED DOMES, PAINT & STENCILS (IF APPLICABLE)

FOR CONSTRUCTION

EXPIRATION DATE: JULY 31, 2016

DIGGERS HOTLINE
Toll Free (800) 242-8511
Milwaukee Area (414) 259-1181
Hearing Impaired TDD (800) 542-2289
www.DiggersHotline.com

PINNACLE ENGINEERING GROUP, LLC
ENGINEER'S LIMITATION

PINNACLE ENGINEERING GROUP, LLC AND THEIR CONSULTANTS DO NOT WARRANT OR GUARANTEE THE ACCURACY AND COMPLETENESS OF THE DELIVERABLES HEREIN BEYOND A REASONABLE DILIGENCE. IF ANY MISTAKES, OMISSIONS, OR DISCREPANCIES ARE FOUND TO EXIST WITHIN THE DELIVERABLES, THE ENGINEER SHALL BE PROMPTLY NOTIFIED PRIOR TO BID SO THAT HE MAY HAVE THE OPPORTUNITY TO TAKE WHATEVER STEPS NECESSARY TO RESOLVE THEM. FAILURE TO PROMPTLY NOTIFY THE ENGINEER OF SUCH CONDITIONS SHALL ABSOLVE THE ENGINEER FROM ANY RESPONSIBILITY FOR THE CONSEQUENCES OF SUCH FAILURE. ACTIONS TAKEN WITHOUT THE KNOWLEDGE AND CONSENT TO THE ENGINEER, OR IN CONTRADICTION TO THE ENGINEER'S DELIVERABLES OR RECOMMENDATIONS, SHALL BECOME THE RESPONSIBILITY NOT OF THE ENGINEER BUT OF THE PARTIES RESPONSIBLE FOR TAKING SUCH ACTION.

FURTHERMORE, PINNACLE ENGINEERING GROUP, LLC IS NOT RESPONSIBLE FOR CONSTRUCTION SAFETY OR THE MEANS AND METHODS OF CONSTRUCTION.

REVIEWED: ARA
DESIGNED: ARA
DRAFTED: MKA

PINNACLE ENGINEERING GROUP
ENGINEERING I NATURAL RESOURCES I SURVEYING
PLAN I DESIGN I DELIVER
www.pinnacle-engr.com
WISCONSIN OFFICE:
15850 W. BLUEMOUND ROAD
BROOKFIELD, WI 53005
(262) 754-8888
CHICAGO I MILWAUKEE I NATIONWIDE

ULINE CORP. CAMPUS CONF. CENTER
PLEASANT PRAIRIE

COVER SHEET

REVISIONS

1	WDNR NOI SUBMITTAL	05-04-15	5	FINAL S&O SUBMITTAL	07-10-15
2	CONSTRUCTION PACKAGE 1	05-08-15			
3	ADDRESS VILLAGE COMMENTS	06-01-15			
4	ADDRESS VILLAGE COMMENTS/DSPS	06-09-15			

PEC JOB No: 115.008
PEC PM: ARA
START DATE: 04/06/15
SCALE:

SHEET C-1 OF C-7

© COPYRIGHT 2015

FOR CONSTRUCTION
COVER SHEET

THESE PLANS AND DESIGNS ARE COPYRIGHT PROTECTED AND MAY NOT BE USED IN WHOLE OR IN PART WITHOUT THE WRITTEN CONSENT OF PINNACLE ENGINEERING GROUP, LLC

EXISTING CONDITIONS SURVEY

EXISTING CONDITIONS SURVEY PROVIDED BY CHAPUT LAND SURVEYS IN 2015. ALTHOUGH PINNACLE ENGINEERING GROUP HAS NO REASON TO BELIEVE THE SURVEY IS INACCURATE, PEG MAKES NO WARRANTS ON EXISTING INFORMATION CONTAINED WITHIN THESE PLANS IS ALL-INCLUSIVE OR ACCURATE. ***CONTRACTOR SHALL UNDERTAKE NECESSARY EFFORTS TO VERIFY THE EXISTING CONDITIONS PRIOR TO THE START OF MATERIAL PROCUREMENT AND CONSTRUCTION EFFORTS/ACTIVITIES.***

CONTRACTOR RESPONSIBILITY:

"THE INFORMATION SHOWN ON THIS DRAWING CONCERNING TYPE AND LOCATION OF UNDERGROUND UTILITIES IS NOT GUARANTEED TO BE ACCURATE OR ALL INCLUSIVE. T**HE CONTRACTOR IS RESPONSIBLE FOR MAKING HIS OWN DETERMINATIONS AS TO THE TYPE AND LOCATION OF UNDERGROUND UTILITIES AS MAY BE NECESSARY TO AVOID DAMAGE THERETO.** IF ADDITIONAL UTILITIES ARE KNOWN TO EXIST IN THE PROPERTY, THE OWNER WILL PROVIDE EXISTING PLANS OF OTHER UTILITIES SERVING THE SITE AND THE BUILDING THAT OTHERWISE CANNOT BE LOCATED BY A VISUAL OBSERVATION OF THE PROPERTY OR OF WHICH THE SURVEYOR WOULD HAVE NO KNOWLEDGE".

LEGEND

- SANITARY MANHOLE
- STORM MANHOLE
- CATCH BASIN
- INLET
- PRECAST FLARED END SECTION
- CONCRETE HEADWALL
- VALVE VAULT
- VALVE BOX
- FIRE HYDRANT
- BUFFALO BOX
- CLEANOUT
- SANITARY SEWER
- FORCE MAIN
- STORM SEWER
- WATER MAIN
- LIGHTING
- ELECTRICAL CABLE
- ELECTRICAL TRANSFORMER OR PEDESTAL
- POWER POLE
- POWER POLE WITH LIGHT
- GUY WIRE
- STREET SIGN
- GAS MAIN
- TELEPHONE LINE
- CONTOUR (749)
- OVERFLOW RELIEF ROUTING
- TREE TRUNKS
- CONCRETE SIDEWALK
- EASEMENT LINE

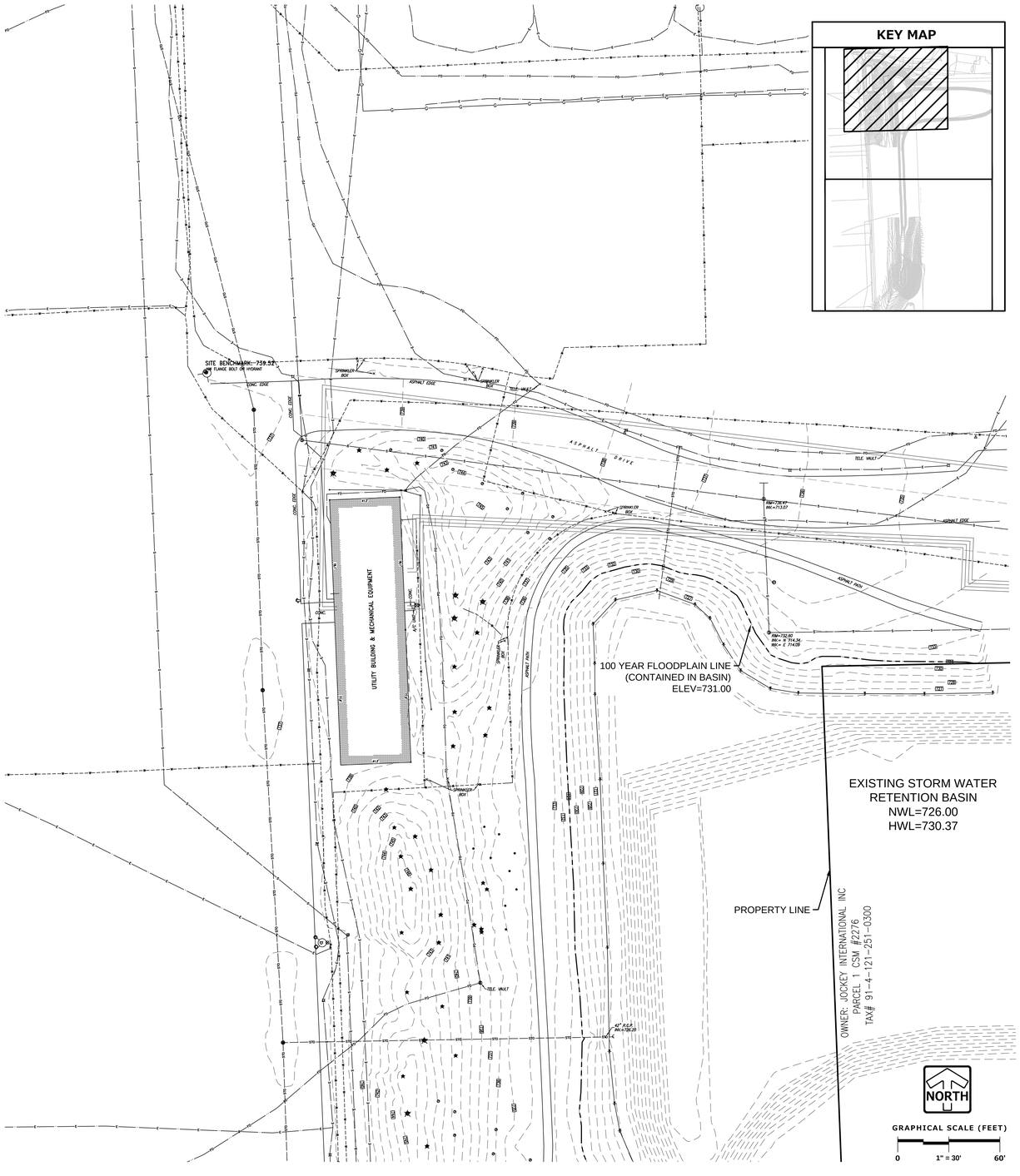

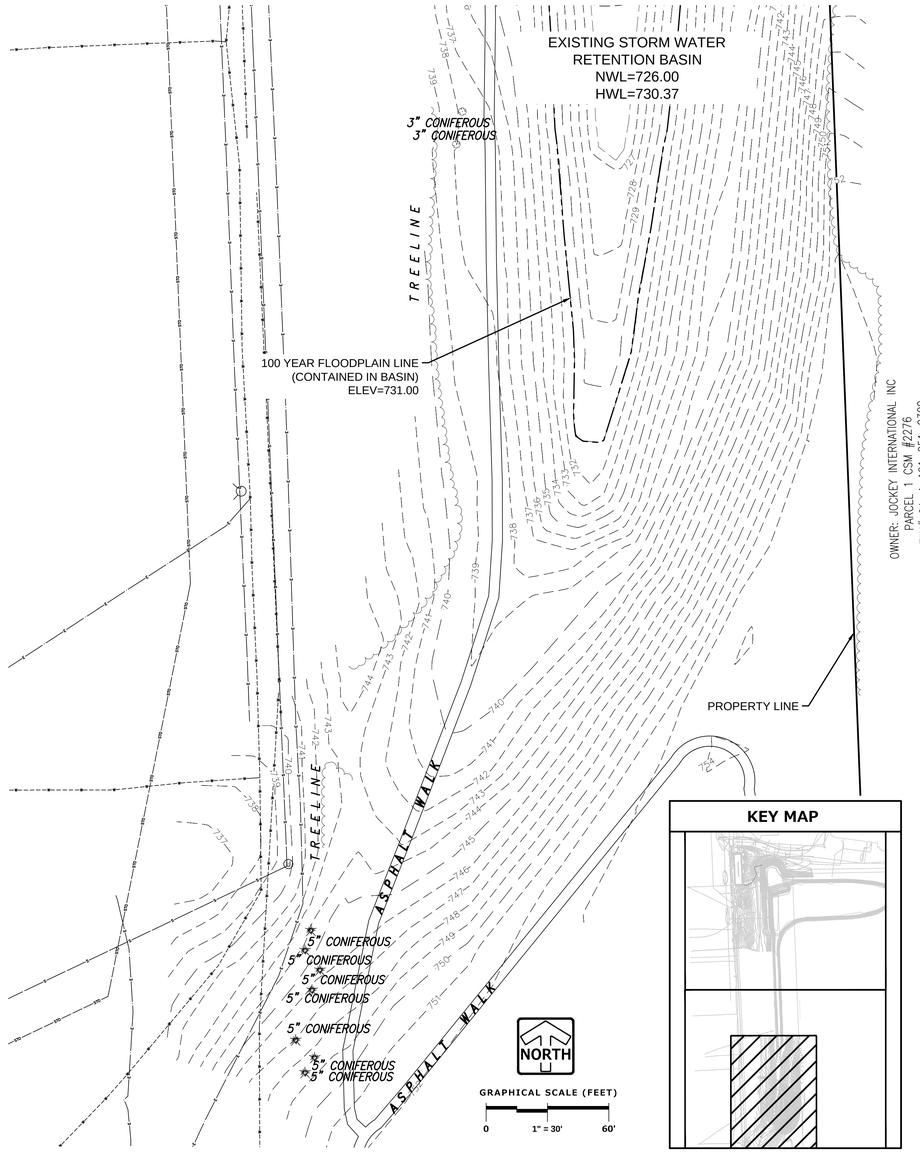

www.pinnacle-engr.com

FOR CONSTRUCTION

EXISTING CONDITIONS

REVIEWED: ARA
DESIGNED: ARA
DRAFTED: MRA

PLAN | DESIGN | DELIVER
www.pinnacle-engr.com

PINNACLE ENGINEERING GROUP
ENGINEERING | NATURAL RESOURCES | SURVEYING

WISCONSIN OFFICE:
15850 W. BLUEMOUND ROAD
BROOKFIELD, WI 53005
(262) 754-8888
CHICAGO | MILWAUKEE | NATIONWIDE

ULINE CORP. CAMPUS CONF. CENTER
PLEASANT PRAIRIE

EXISTING CONDITIONS

REVISIONS

1	WDNR NOI SUBMITTAL	05-04-15	5	FINAL S & O SUBMITTAL	07-10-15
2	CONSTRUCTION PACKAGE 1	05-08-15			
3	ADDRESS VILLAGE COMMENTS	06-01-15			
4	ADDRESS VILLAGE COMMENTS/DSPS	06-09-15			

PEG JOB No. 119.009
PEG PM ARA
START DATE 04/06/15
SCALE

SHEET
C-2
OF
C-7

© COPYRIGHT 2015

THESE PLANS AND DESIGNS ARE COPYRIGHT PROTECTED AND MAY NOT BE USED IN WHOLE OR IN PART WITHOUT THE WRITTEN CONSENT OF PINNACLE ENGINEERING GROUP, LLC

KEY MAP

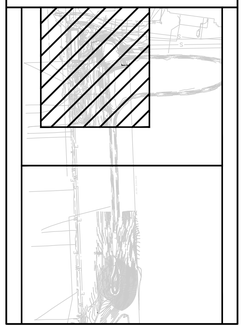

NOTES

SEE CONSTRUCTION DETAILS FOR PAVING, GRADING, EROSION CONTROL NOTES AND SPECIFICATIONS.

LEGEND

- CONTOUR — 749
- SPOT ELEVATION — ×750.00
- WETLANDS
- FLOODWAY
- MANDOOR
- ASPHALT PATH — 6" CRUSHED AGGREGATE BASE COURSE (1-1/4" DENSE GRADED AGGREGATE); 3" ASPHALTIC CONC. SURFACE COURSE (E-0.3 MIX, 9.5 mm NOMINAL SIZE)
- CONCRETE SIDEWALK — 6" CRUSHED AGGREGATE BASE COURSE (1-1/4" DENSE GRADED AGGREGATE); 4" PCC
- FLOODPLAIN
- HIGH WATER LEVEL (HWL)
- NORMAL WATER LEVEL (NWL)
- DIRECTION OF SURFACE FLOW
- DITCH OR SWALE
- DIRECTION OF SURFACE FLOW
- OVERFLOW RELIEF ROUTING
- 5

EXISTING FLOODPLAIN FILL:
FILL: 2,226 CY ±

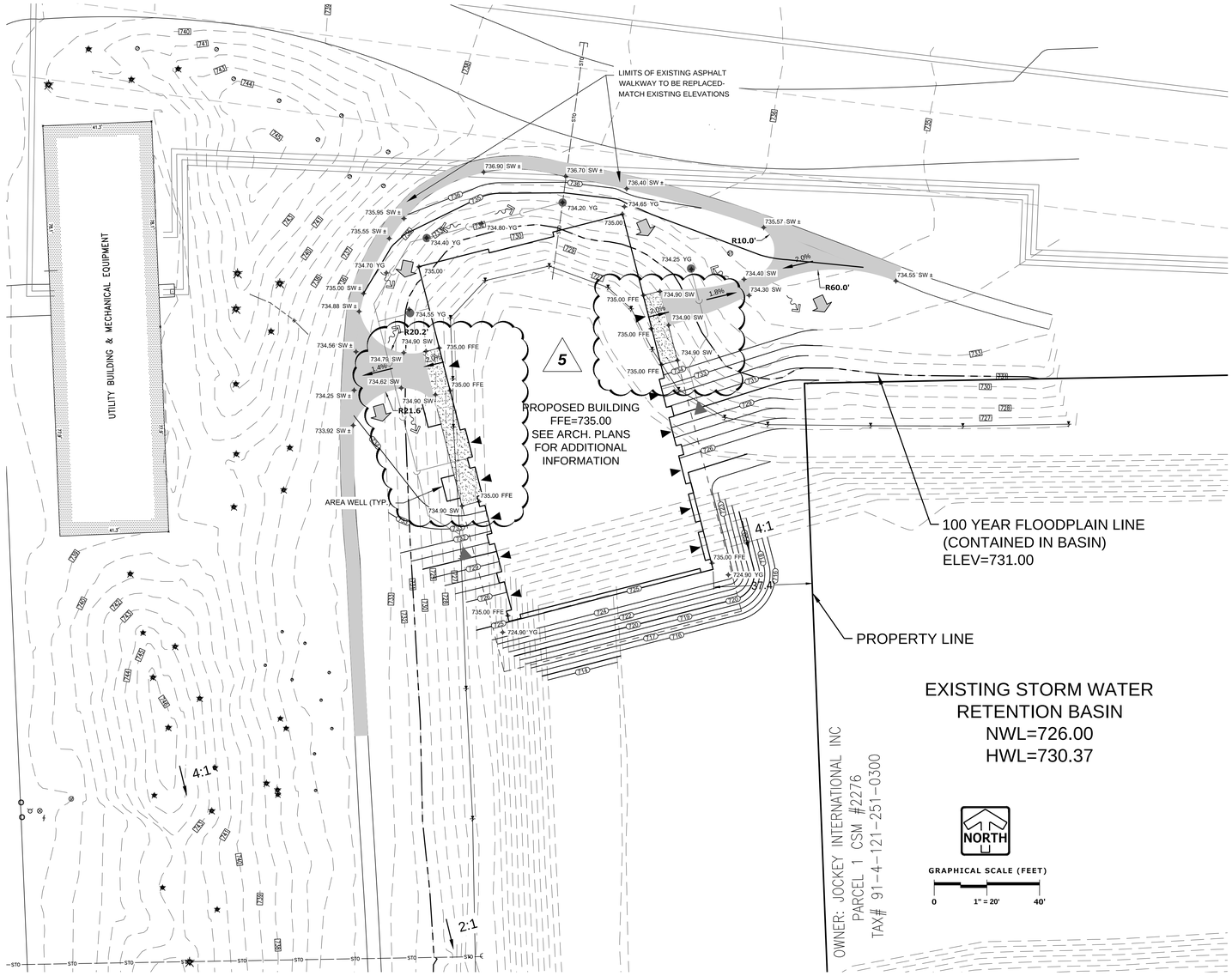

COMPENSATORY STORAGE AREA
CUT: 3,790 CY ±

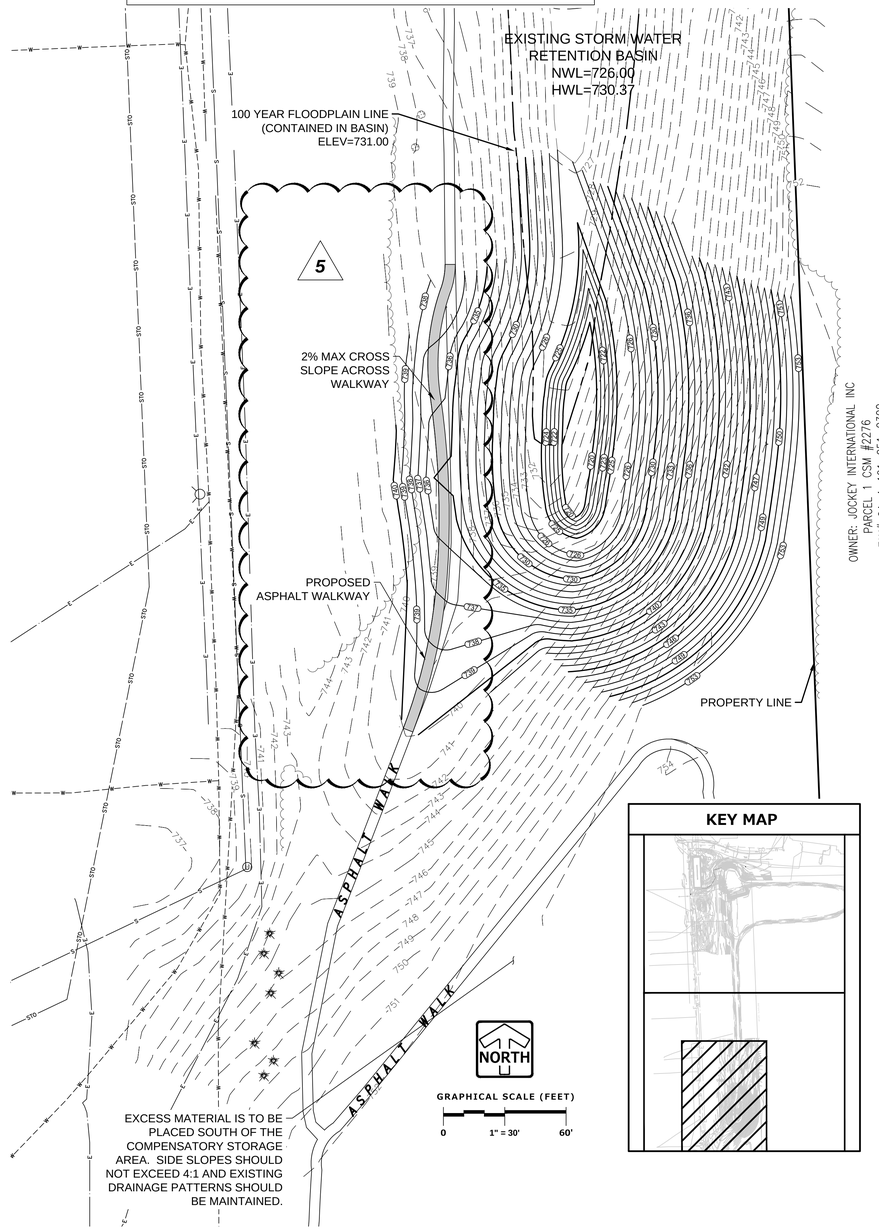

KEY MAP

www.pinnacle-engr.com

FOR CONSTRUCTION

GRADING PLAN

DESIGNED: ARA
DRAFTED: MRA
REVIEWED: ARA

PLAN I DESIGN I DELIVER
www.pinnacle-engr.com

PINNACLE ENGINEERING GROUP
ENGINEERING I NATURAL RESOURCES I SURVEYING

WISCONSIN OFFICE:
15850 W. BLUEMOUND ROAD
BROOKFIELD, WI 53005
(262) 754-8888
CHICAGO I MILWAUKEE : NATIONWIDE

ULINE CORP. CAMPUS CONF. CENTER
PLEASANT PRAIRIE

GRADING PLAN

REVISIONS

1	WDNR NOI SUBMITTAL	05-04-15	5	FINAL S & O SUBMITTAL	07-10-15
2	CONSTRUCTION PACKAGE 1	05-08-15			
3	ADDRESS VILLAGE COMMENTS	06-01-15			
4	ADDRESS VILLAGE COMMENTS/DSPS	06-09-15			

PEG JOB No. 115.008 ARA
PEG PM
START DATE 04/06/15
SCALE

SHEET C-3 OF C-7

© COPYRIGHT 2015

THESE PLANS AND DESIGNS ARE COPYRIGHT PROTECTED AND MAY NOT BE USED IN WHOLE OR IN PART WITHOUT THE WRITTEN CONSENT OF PINNACLE ENGINEERING GROUP, LLC

www.pinnacle-engr.com

FOR CONSTRUCTION

KEY MAP

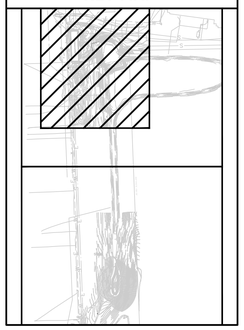

NOTES

SEE CONSTRUCTION DETAILS FOR PAVING, GRADING, EROSION CONTROL NOTES AND SPECIFICATIONS.

LEGEND

CONTOUR	749	FLOODPLAIN	
SPOT ELEVATION	×750.00	HIGH WATER LEVEL (HWL)	
WETLANDS		NORMAL WATER LEVEL (NWL)	
FLOODWAY		DIRECTION OF SURFACE FLOW	
MANDOOR		DITCH OR SWALE	
		DIRECTION OF SURFACE FLOW	
HYDROSEED		OVERFLOW RELIEF ROUTING	
		FENCE LINE, TEMPORARY SILT	SF
EROSION CONTROL BLANKET (TYPE III CLASS A)		EROSION CONTROL BLANKET (TYPE I CLASS B)	
		INLET PROTECTION	

CONTRACTOR RESPONSIBLE TO REMOVE SOIL DEPOSITS ON ROAD IMMEDIATELY

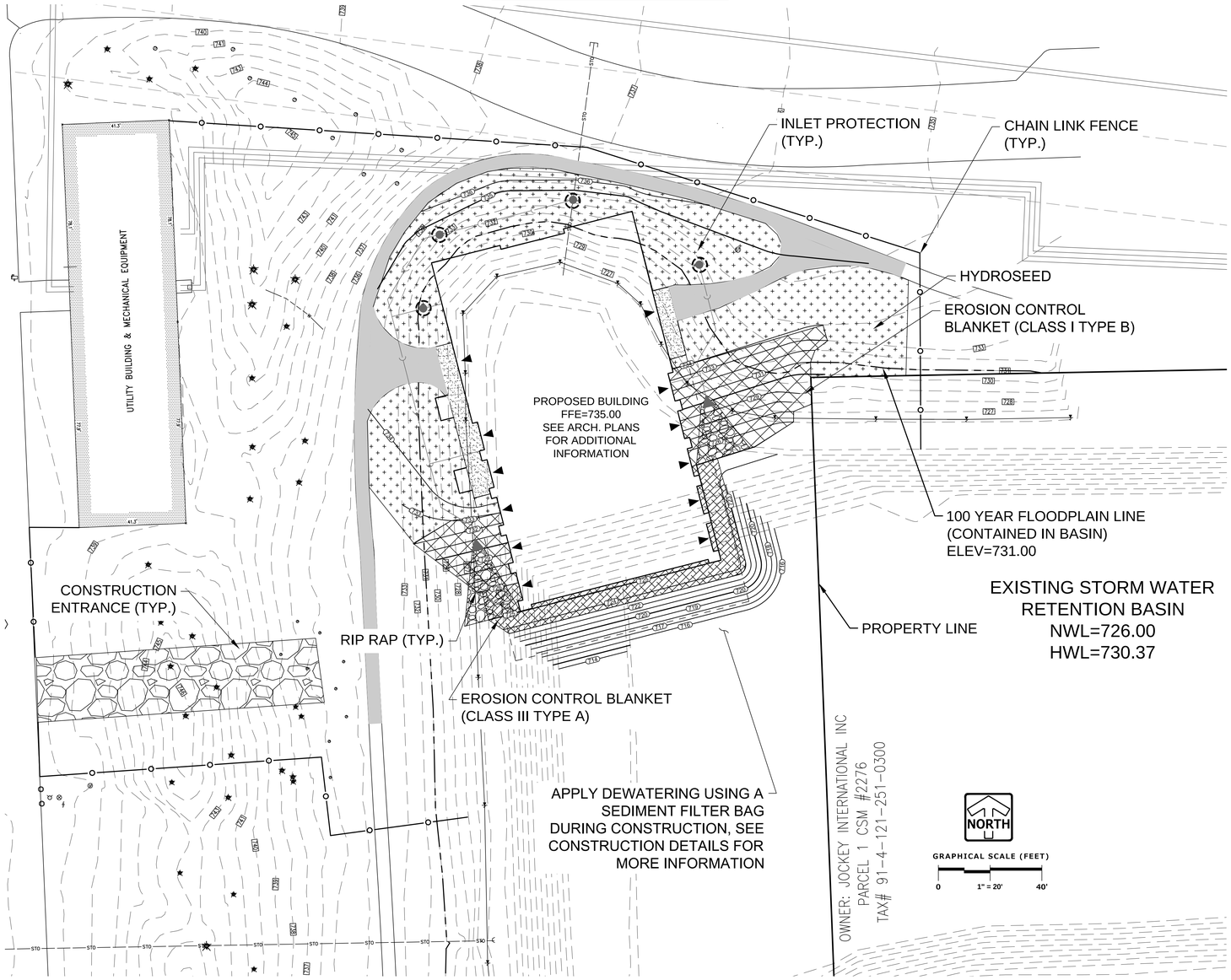

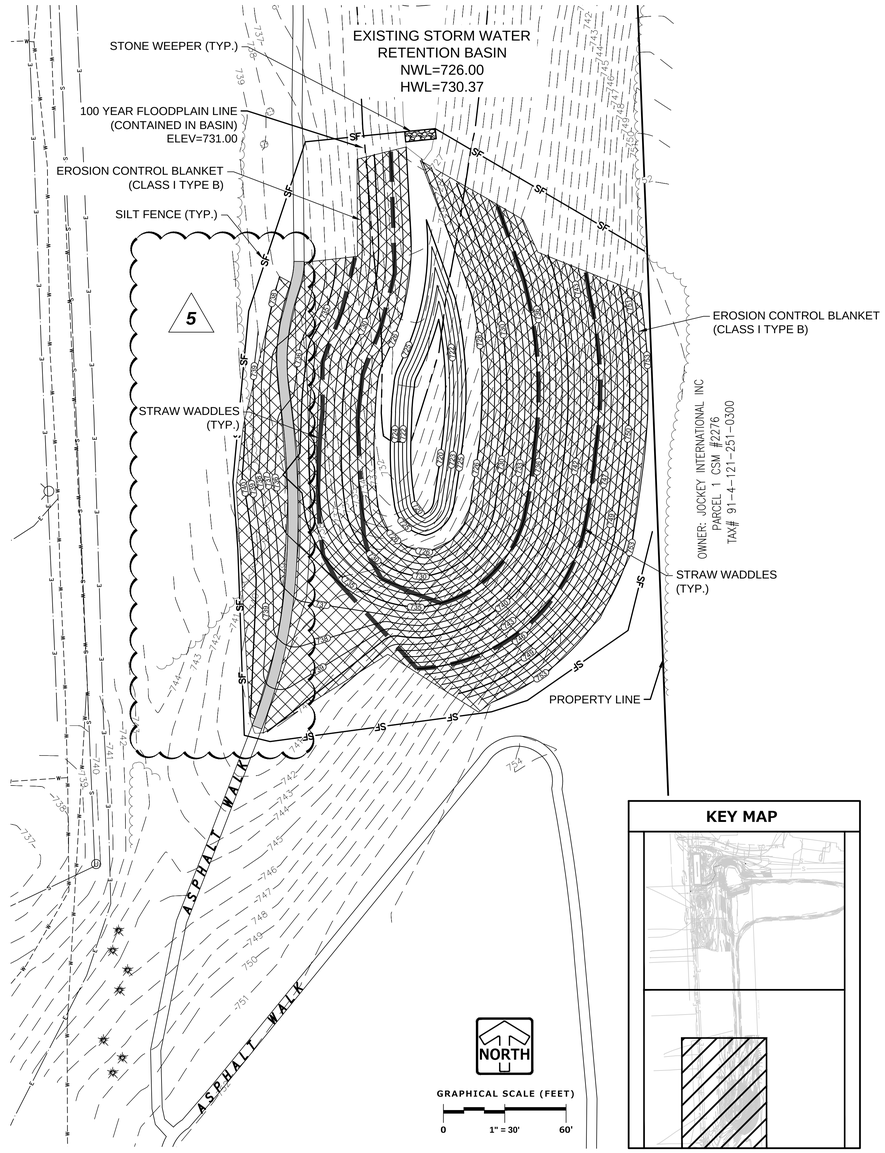

KEY MAP

PLAN | DESIGN | DELIVER
www.pinnacle-engr.com
PINNACLE ENGINEERING GROUP
ENGINEERING | NATURAL RESOURCES | SURVEYING
WISCONSIN OFFICE:
15850 W. BLUEMOUND ROAD
BROOKFIELD, WI 53005
(262) 754-8888
CHICAGO | MILWAUKEE | NATIONWIDE

ULINE CORP. CAMPUS CONF. CENTER
PLEASANT PRAIRIE

EROSION CONROL PLAN

REVISIONS

1	WDNR NOI SUBMITTAL	05-04-15	5	FINAL S & O SUBMITTAL	07-10-15
2	CONSTRUCTION PACKAGE 1	05-08-15			
3	ADDRESS VILLAGE COMMENTS	06-01-15			
4	ADDRESS VILLAGE COMMENTS/DSPS	06-09-15			

PEC JOB No. 119.008
PEC PM ARA
START DATE 04/06/15
SCALE

SHEET C-4 OF C-7

© COPYRIGHT 2015

EROSION CONROL PLAN

REVIEWED: ARA
DESIGNED: ARA
DRAFTED: MRA

THESE PLANS AND DESIGNS ARE COPYRIGHT PROTECTED AND MAY NOT BE USED IN WHOLE OR IN PART WITHOUT THE WRITTEN CONSENT OF PINNACLE ENGINEERING GROUP, LLC

CROSSINGS

1. 8" STORM OVER 6" WATER
   8" B/PIPE=±730.82
   6" T/PIPE=±727.50
2. 8" STORM OVER 6" WATER
   8" B/PIPE=±730.59
   6" T/PIPE=±726.00
3. 8" STORM OVER 6" WATER
   8" B/PIPE=±730.49
   6" T/PIPE=±725.50
4. 12" FIRE PROTECTION
   4" SANITARY
   12" B/PIPE=±730.50
   4" T/PIPE=±726.56
5. 42" STORM OVER 4" SANITARY
   42" B/PIPE=±727.82
   4" T/PIPE=±726.25
6. 8" STORM OVER 4" SANITARY
   8" B/PIPE=±730.12
   4" T/PIPE=±728.15
7. 6" WATER OVER 4" SANITARY
   6" B/PIPE=±732.25
   4" T/PIPE=±727.21
8. 6" FIRE PROTECTION OVER 4" SANITARY
   6" B/PIPE=±732.25
   4" T/PIPE=±727.11

5

NOTES

1. SEE CONSTRUCTION DETAILS FOR UTILITY NOTES AND SPECIFICATIONS.
2. CONTRACTOR TO CONTACT THE VILLAGE PUBLIC WORKS DEPARTMENT (STEVE WLAHOVICH; 262-925-6767) TO SCHEDULE INSPECTIONS FOR INSTALLATION.
3. PLEASE REFER TO SEPARATE SPECIFICATIONS FOR FIRE HYDRANTS AND SANITARY SEWER SUPPLIED BY THE VILLAGE OF PLEASANT PRAIRIE.
4. INSTALL AIR RELEASE ASSEMBLY WITHIN THE PROPOSED WATER LINES AT ANY HIGHPOINTS CREATED BY AVOIDING THE EXISTING UTILITIES.

LEGEND

- CONCRETE HEADWALL
- VALVE VAULT
- VALVE BOX
- FIRE HYDRANT
- BUFFALO BOX
- CLEANOUT
- SANITARY SEWER
- FORCE MAIN
- STORM SEWER
- FP — FIRE PROTECTION
- W — WATER MAIN
- UTILITY CROSSING
- GRANULAR TRENCH BACKFILL
- LIGHTING
- ELECTRICAL CABLE
- ELECTRICAL TRANSFORMER OR PEDESTAL
- POWER POLE
- POWER POLE WITH LIGHT
- STREET SIGN
- GAS MAIN
- TELEPHONE LINE

CONNECT INTO EXISTING 12" WATER MAIN
EX. 12" INV= 735.85±
CONNECTION TYPE TO BE DETERMINED DURING CONSTRUCTION

EXISTING 12" WATER MAIN

SHUT-OFF VALVE

CONNECT INTO EXISTING GAS LINE

45° BEND

45° BEND

258 L.F. OF W.M.

EXISTING IRRIGATION LINE

GAS LINE (BY OTHERS)

COMBINED DOMESTIC/ FIRE PROTECTION LINE SHOWN FOR CONCEPTUAL LAYOUT ONLY. FINAL SIZING AND DESIGN SHALL BE BY A LICENSED FIRE PROTECTION ENGINEER.

CONTRACTOR TO FIELD VERIFY EXISTING FIELD DUCT BANK. MAINTAIN AT LEAST 6' OF COVER FOR WATER MAIN AND 6" OF SEPARATION AT BANK CROSSING. AIR RELEASE ASSEMBLY SHALL BE INSTALLED AT ANY HIGHPOINTS CREATED BY AVOIDING THE EXISTING UTILITIES.

SITE BENCHMARK: 739.52
NW FLANGE BOLT OF HYDRANT

COMBINED FIRE PROTECTION AND WATER SERVICE LINE

EXISTING 12" WATER MAIN

EXISTING 12" STORM SEWER STUB TO BE ABANDONED (WITH FLOWABLE FILL) (REMOVE AS NECESSARY FOR FOUNDATION CONSTRUCTION)

EXISTING UTILITY DUCT BANK

PROPOSED HYDRANT ASSEMBLY LOCATION

CONTRACTOR TO FIELD VERIFY EXISTING WATER LINE. MAINTAIN AT LEAST 6' OF COVER FOR WATER MAIN AND 6" OF SEPARATION AT CROSSING

SHUT-OFF VALVE

CONTRACTOR TO FIELD VERIFY EXISTING FIELD DUCT BANK. MAINTAIN AT LEAST 6' OF COVER FOR WATER MAIN AND 6" OF SEPARATION AT BANK CROSSING. AIR RELEASE ASSEMBLY SHALL BE INSTALLED AT ANY HIGHPOINTS CREATED BY AVOIDING THE EXISTING UTILITIES.

EXISTING HYDRANT ASSEMBLY AND REMOTE FDC CONNECTION

EXISTING H1 PUMPER PAD LOCATION

C.U.P. WATER CONNECTION

APPROXIMATE ROUTE OF EXISTING TWO 4" EMPTY ELECTRICAL BURIED CONDUITS

30' WIDE SANITARY SEWER ACCESS AND MAINTENANCE EASEMENT

AREA DRAIN 4.0
RIM= 734.40
INV= 730.98 (6" E)
INV= 730.98 (6" W)

AREA DRAIN 3.0
RIM= 734.20
INV= 731.35 (6" W)

RIM=738.47
INV.=713.07

40.5 L.F. OF 8" PVC @ 0.70%

45° BEND 4.1

53.3 L.F. OF 6" PVC @ 0.70%

AREA DRAIN 5.0
RIM= 734.55
INV= 730.91 (6" E)
INV= 730.91 (6" W)

AREA DRAIN 1.0
RIM= 734.25
INV= 730.80 (6" W)
INV= 730.80 (6" S)

58.3 L.F. OF 6" PVC @ 2.00%

45° BEND 1.1

45° BEND 5.2

12.0 L.F. OF 6" PVC @ 1.04%

8 L.F. OF 6" PVC @ 1.04%

B.C. 5.1
INV= 731.00 (6" W)

4" SANITARY VENT LINE (BY OTHERS)

FIBER OPTIC, GAS, AND ELECTRICAL LINES (BY OTHERS)

COMBINED FIRE PROTECTION AND WATER SERVICE BUILDING CONNECTION

8" x 6" TEE 5.3
8" (S)INV= 730.70
6" (W)INV= 730.78

REMOTE FDC BLDG CONNECTION

12.0 L.F. OF 6" PVC @ 1.04%

RIM=732.60
INV.= N 714.34
INV.= E 714.09

45° BEND 1.2

6"x6" TEE 1.3
6" (W) INV= 729.89
6" (S) INV= 729.89

19.8 L.F. OF 6" PVC @ 3.18%

BC 1.4
INV=730.00

ES 2.0
INV= 729.63

PROPOSED BUILDING
FFE=735.00
SEE ARCH. PLANS FOR ADDITIONAL INFORMATION

ELECTRIC HAND HOLE (BY OTHERS)

BC 7.0
INV= 731.00

SAN BC
INV=727.32

99.6 L.F. OF 8" PVC @ 0.70%

8"x6" TEE 7.1
6" (W) INV=730.37
8" (S) INV=730.29

4" SANITARY SEWER BUILDING CONNECTION
INV=728.00

W1 FIRE PROTECTION LOOP

45° BEND 5.4

45° BEND 5.5

45° BEND

ES 6.0
INV= 730.00

PROPOSED HYDRANT LOCATION

PROPOSED PUMPER PAD LOCATION

35.9 L.F. OF 4" PVC @ 2.08%

PROPOSED REMOTE FDC LOCATION

CHILLED (2) AND HOT (2) WATER PIPES (BY OTHERS)

205.0 L.F. OF 4" PVC @ 1.04%

4"x4" TEE
INV=726.57

45° BEND

OUTSIDE DROP SAN MH 2.0
RIM= 737.50±
INV= 725.45± (4" E)
EX. INV= 720.75± (8" SE)
EX. INV= 720.65± (8" NW)
VERIFY EXISTING INVERT ELEVATION PRIOR TO SANITARY LINE INSTALLATION

40.5 L.F. OF 4" PVC @ 1.04%

PROPOSED VALVE VAULT

SAN SAMPLING MH 1.0
RIM= 737.40±
INV= 725.87 (4" W & E)
(SEE NOTE ABOVE)

ADJUST EXISTING ELECTRICAL AND IRRIGATION LINES AS NECESSARY FOR PUMPER PAD/SANITARY INSTALLATION

REPLACE EXISTING CONCRETE PAVEMENT IN-KIND FOR SANITARY TRENCH INSTALLATION

FIRE PROTECTION/WATER LINES SHOWN FOR CONCEPTUAL LAYOUT ONLY. FINAL SIZING AND DESIGN SHALL BE BY A LICENSED FIRE PROTECTION ENGINEER.

EXISTING W1 BUILDING

EXISTING 8" SANITARY LINE

UTILITY BUILDING & MECHANICAL EQUIPMENT

EXISTING H1 BUILDING

OWNER: JOCKEY INTERNATIONAL INC
PARCEL 1 CSM #2276
TAX# 91-4-121-251-0300

100 YEAR FLOODPLAIN LINE (CONTAINED IN BASIN) ELEV=731.00

PROPERTY LINE

EXISTING STORM WATER RETENTION BASIN
NWL=726.00
HWL=730.37

NORTH

GRAPHICAL SCALE (FEET)
0 1" = 20' 40'

www.pinnacle-engr.com

FOR CONSTRUCTION

UTILITY PLAN

DESIGNED - ARA
DRAFTED - MRA
REVIEWED - ARA

PLAN I DESIGN I DELIVER
www.pinnacle-engr.com

PINNACLE ENGINEERING GROUP
ENGINEERING I NATURAL RESOURCES I SURVEYING

WISCONSIN OFFICES:
15850 W. BLUEMOUND ROAD
BROOKFIELD, WI 53005
(262) 754-8888
CHICAGO I MILWAUKEE : NATIONWIDE

ULINE CORP. CAMPUS CONF. CENTER
PLEASANT PRAIRIE

UTILITY PLAN

REVISIONS

1	WDNR NOI SUBMITTAL	05-04-15	5	FINAL S & O SUBMITTAL	07-10-15
2	CONSTRUCTION PACKAGE 1	05-08-15			
3	ADDRESS VILLAGE COMMENTS	06-01-15			
4	ADDRESS VILLAGE COMMENTS/DSPS	06-09-15			

PEG JOB No. 119.008 ARA
PEG PM
START DATE 04/06/15
SCALE

SHEET
C-5 OF C-7

© COPYRIGHT 2015

THESE PLANS AND DESIGNS ARE COPYRIGHT PROTECTED AND MAY NOT BE USED IN WHOLE OR IN PART WITHOUT THE WRITTEN CONSENT OF PINNACLE ENGINEERING GROUP, LLC

GENERAL SPECIFICATIONS FOR CONSTRUCTION ACTIVITIES

1. THE PROPOSED IMPROVEMENTS SHALL BE CONSTRUCTED ACCORDING TO THE WISCONSIN D.O.T. STANDARD SPECIFICATIONS FOR HIGHWAY AND STRUCTURE CONSTRUCTION, LATEST EDITION, THE STANDARD SPECIFICATIONS FOR SEWER & WATER IN WISCONSIN, AND WISCONSIN ADMINISTRATIVE CODE, SPS 360, 382-383, AND THE LOCAL ORDINANCES AND SPECIFICATIONS.
2. THE CONTRACTOR SHALL OBTAIN ALL PERMITS REQUIRED FOR EXECUTION OF THE WORK. THE CONTRACTOR SHALL CONDUCT HIS WORK ACCORDING TO THE REQUIREMENTS OF THE PERMITS.
3. THE CONTRACTOR SHALL NOTIFY THE OWNER AND THE MUNICIPALITY FORTY- EIGHT (48) HOURS PRIOR TO THE START OF CONSTRUCTION.
4. THE MUNICIPALITY SHALL HAVE THE RIGHT TO INSPECT, APPROVE, AND REJECT THE CONSTRUCTION OF THE PUBLIC PORTIONS OF THE WORK. THE OWNER SHALL HAVE THE RIGHT TO INSPECT, APPROVE, AND REJECT THE CONSTRUCTION OF ALL PRIVATE PORTIONS OF THE WORK.
5. THE CONTRACTOR SHALL INDEMNIFY THE OWNER, THE ENGINEER, AND THE MUNICIPALITY, THEIR AGENTS, ETC, FROM ALL LIABILITY INVOLVED WITH THE CONSTRUCTION, INSTALLATION, AND TESTING OF THE WORK ON THIS PROJECT.
6. SITE SAFETY SHALL BE THE SOLE RESPONSIBILITY OF THE CONTRACTOR.
7. THE CONTRACTOR IS RESPONSIBLE FOR FIELD VERIFYING ALL UTILITY INFORMATION SHOWN ON THE PLANS PRIOR TO THE START OF CONSTRUCTION. THE CONTRACTOR SHALL CALL DIGGER'S HOTLINE AT 1-800-242-8511 TO NOTIFY THE UTILITIES OF HIS INTENTIONS, AND TO REQUEST FIELD STAKING OF EXISTING UTILITIES.
8. SILT FENCE AND OTHER EROSION CONTROL FACILITIES MUST BE INSTALLED PRIOR TO CONSTRUCTION OR ANY OTHER LAND DISTURBING ACTIVITY. FOLLOW THE SEQUENCE OF CONSTRUCTION ON THE EROSION CONTROL PLAN FOR MORE DETAILS. INSPECTIONS SHALL BE MADE WEEKLY OR AFTER EVERY RAINFALL OF 0.5" OR MORE. REPAIRS SHALL BE MADE IMMEDIATELY. THE CONTRACTOR SHALL BE RESPONSIBLE FOR REMOVING ALL EROSION CONTROL FACILITIES ONCE THE THREAT OF EROSION HAS PASSED WITH THE APPROVAL OF THE GOVERNING AGENCY.
9. ANY ADJACENT PROPERTIES OR ROAD RIGHT-OF-WAYS WHICH ARE DAMAGED DURING CONSTRUCTION MUST BE RESTORED BY THE CONTRACTOR.
10. TRASH AND DEBRIS SHALL BE NOT BE ALLOWED TO ACCUMULATE ON THIS SITE AND THE SITE SHALL BE CLEAN UPON COMPLETION OF WORK.
11. THE OWNER SHALL HAVE THE RIGHT TO HAVE ALL MATERIALS USED IN CONSTRUCTION TESTED FOR COMPLIANCE WITH THESE SPECIFICATIONS.

SPECIFICATIONS FOR GRADING & EROSION CONTROL

1. THE CONTRACTOR SHALL ASSUME SOLE RESPONSIBILITY FOR THE COMPUTATIONS OF ALL GRADING AND FOR ACTUAL LAND BALANCE, INCLUDING UTILITY TRENCH SPOIL. THE CONTRACTOR SHALL IMPORT OR EXPORT MATERIAL AS NECESSARY TO COMPLETE THE PROJECT. CONTRACTOR SHALL NOTIFY OWNER OF THE NEED TO IMPORT OR HAUL OFF SOIL. ON-SITE LOCATIONS SUITABLE FOR BORROW OR FILL MAY BE PRESENT. COORDINATE WITH OWNER.
2. THE CONTRACTOR IS RESPONSIBLE FOR VERIFYING SOIL CONDITIONS PRIOR TO COMMENCEMENT OF CONSTRUCTION. A GEOTECHNICAL REPORT MAY BE AVAILABLE FROM THE OWNER.
3. SITE SHALL BE CLEARED TO THE LIMITS SHOWN ON THE PLANS. REMOVE VEGETATION FROM THE SITE. BURNING IS NOT PERMITTED. PROTECT TREES AND OTHER FEATURES FROM DAMAGE WITH FENCING. STOCKPILES SHALL NOT BE LOCATED CLOSER THAN 25' TO A DRAINAGE STRUCTURE OR FEATURE AND SHALL BE SURROUNDED WITH SILT FENCE.
4. THE GEOTECHNICAL ENGINEER IS RESPONSIBLE FOR VERIFYING COMPACTION AND FILL PLACEMENT IN THE FIELD. THE GEOTECHNICAL ENGINEER MAY SUPERCEDE THESE SPECIFICATIONS IF THERE IS GOOD CAUSE TO DO SO. AN EXPLANATION MUST BE SUBMITTED TO THE ENGINEER IN WITTING BEFORE ANY DEVIATIONS ARE MADE.
5. IF NO GEOTECHNICAL RECOMMENDATION IS AVAILABLE, THEN THE FOLLOWING SPECIFICATIONS SHALL APPLY. ALL FILL SHALL BE CONSIDERED STRUCTURAL FILL AND SHALL BE PLACED IN ACCORDANCE WITH THE FOLLOWING: THE COMPACTED FILL SUBGRADE SHALL CONSIST OF AND SHALL BE UNDERLAIN BY SUITABLE BEARING MATERIALS, FREE OF ALL ORGANIC, FROZEN OR OTHER DELETERIOUS MATERIAL AND INSPECTED AND APPROVED BY THE RESIDENT GEOTECHNICAL ENGINEER. PREPARATION OF THE SUBGRADE, AFTER STRIPPING, SHALL CONSIST OF PROOF-ROLLING TO DETECT UNSTABLE AREAS THAT MIGHT BE UNDERCUT, AND COMPACTING THE SCARIFIED SURFACE TO THE SAME MINIMUM DENSITY INDICATED BELOW. THE COMPACTED FILL MATERIALS SHALL BE FREE OF ANY DELETERIOUS, ORGANIC OR FROZEN MATTER AND SHALL HAVE A MAXIMUM LIQUID LIMIT (ASTM-D-423) AND PLASTICITY INDEX (ASTM D-424) IF 30 AND 10 RESPECTFULLY, UNLESS SPECIFICALLY TESTED AND FOUND TO HAVE LOW EXPANSIVE PROPERTIES AND APPROVED BY AN EXPERIENCED SOILS ENGINEER. THE TOP TWELVE (12") INCHES OF COMPACTED FILL SHOULD HAVE A MAXIMUM THREE (3") INCH PARTICLE DIAMETER AND ALL UNDERLYING COMPACTED FILL A MAXIMUM SIX (6") INCH PARTICLE DIAMETER UNLESS SPECIFICALLY APPROVED BY AN EXPERIENCED SOILS ENGINEER. ALL FILL MATERIAL MUST BE TESTED AND APPROVED UNDER THE DIRECTION AND SUPERVISION OF AN EXPERIENCED SOILS ENGINEER PRIOR TO PLACEMENT, IF THE FILL IS TO PROVIDE NON-FROST SUSCEPTIBLE CHARACTERISTICS, IT MUST BE CLASSIFIED AS A CLEAN GW, GP, SW, OR SP PER UNITED SOIL CLASSIFICATION SYSTEM (ASTM D-2487), FOR STRUCTURAL FILL THE DENSITY OF THE STRUCTURAL COMPACTED FILL AND SCARIFIED SUBGRADE AND GRADES SHALL NOT BE LESS THAN 95 PERCENT OF THE MAXIMUM DRY DENSITY AS DETERMINED BY THE STANDARD PROCTOR (ASTM D-698) WITH THE EXCEPTION TO THE TOP 12 INCHES OF PAVEMENT SUBGRADE WHICH SHALL A MINIMUM IN-SITU DENSITY OF 100 PERCENT OF THE MAXIMUM DRY DENSITY, OR 5 PERCENT HIGHER THAN UNDERLYING FILL MATERIALS. THE MOISTURE CONTENT OF COHESIVE SOIL SHALL NOT VARY BY MORE THAN -1 TO +3 PERCENT AND GRANULAR SOIL ±3 PERCENT OF OPTIMUM WHEN PLACED AND COMPACTED OR RECOMPACTED, UNLESS SPECIFICALLY APPROVED BY THE SOILS ENGINEER TAKING INTO CONSIDERATION THE TYPE OF MATERIALS AND COMPACTION EQUIPMENT BEING USED. THE COMPACTION EQUIPMENT SHOULD CONSIST OF SUITABLE MECHANICAL EQUIPMENT SPECIFICALLY DESIGNED FOR SOIL COMPACTION. BULLDOZERS OR SIMILAR TRACKED VEHICLES ARE TYPICALLY NOT SUITABLE FOR COMPACTION. MATERIAL THAT IS TOO WET TO PERMIT PROPER COMPACTION MAY BE SPREAD ON THE FILL AND PERMITTED TO DRY. DISCING, HARROWING OR PULVERIZING MAY BE NECESSARY TO REDUCE THE MOISTURE CONTENT TO A SATISFACTORY VALUE, AFTER WHICH IT SHALL BE COMPACTED. THE FINISHED SUBGRADE AREAS OF THE SITE SHALL BE COMPACTED TO 100 PERCENT OF THE STANDARD PROCTOR (ASTM D-398) MAXIMUM DENSITY.
6. NO FILL SHALL BE PLACED ON A WET OR SOFT SUBGRADE. THE SUBGRADE SHALL BE PROOF-ROLLED AND INSPECTED BY THE GEOTECHNICAL ENGINEER BEFORE ANY MATERIAL IS PLACED.
7. SUBGRADE TOLERANCES ARE +/-1" FOR LANDSCAPE AREAS AND +/- ½" FOR ALL PAVEMENT AND BUILDING AREAS.
8. TOPSOIL SHALL BE FREE OF DELETERIOUS MATERIALS, ROOTS, OLD VEGETATION, ROCKS OVER 2" DIAMETER AND SHALL NOT BE EXCESSIVELY CLAYEY IN NATURE. NO CLUMPS LARGER THAN 4" ARE ACCEPTABLE. TOPSOIL MAY BE AMENDED AS NEEDED WITH SAND OR COMPOST TO BE LOOSE WHEN SPREAD.
9. THE CONTRACTOR SHALL MAINTAIN SITE DRAINAGE THROUGHOUT CONSTRUCTION. THIS MAY INCLUDE THE EXCAVATION OF TEMPORARY DITCHES OR PUMPING TO ALLEVIATE WATER PONDING. ANY DEWATERING SHALL NOT GO DIRECTLY TO STREAMS, CREEKS, WETLANDS OR OTHER ENVIRONMENTALLY SENSITIVE AREAS WITHOUT BEING TREATED FIRST. A DIRT BAG OR OTHER DEWATERING TREATMENT DEVICE MAY BE USED TO CAPTURE SEDIMENT FROM THE PUMPED WATER.
10. CONTRACTOR IS ADVISED THAT ALL MUD AND DEBRIS MUST NOT BE DEPOSITED ONTO THE ADJACENT ROADWAYS PER THE REQUIREMENT OF THE MUNICIPALITY OR OTHER APPROPRIATE GOVERNMENT AGENCIES. IN THE EVENT THIS OCCURS, THE ROADWAYS SHALL BE POWER SWEPT IMMEDIATELY AND ALL SEDIMENT REMOVED FROM DOWNSTREAM FACILITIES.

SPECIFICATIONS FOR PRIVATE UTILITIES

1. BEFORE PROCEEDING WITH ANY UTILITY CONSTRUCTION, THE CONTRACTOR SHALL EXCAVATE EACH EXISTING LATERAL OR POINT OF CONNECTION AND VERIFY THE LOCATION AND ELEVATION OF ALL UTILITIES. IF ANY EXISTING UTILITIES ARE NOT AS SHOWN ON THE DRAWINGS, THE CONTRACTOR SHALL NOTIFY THE ENGINEER IMMEDIATELY FOR POSSIBLE REDESIGN.
2. ALL CONNECTIONS TO EXISTING PIPES AND MANHOLES SHALL BE CORED CONNECTIONS. CONNECTIONS TO WATERMAIN SHALL BE WET TAPED WITH A STAINLESS STEEP TAPPING SLEEVE.
3. PROPOSED SANITARY SEWER AND INTERNALLY CONNECTED STORM SEWER SHOWN ON THIS PLAN SHALL TERMINATE AT A POINT FIVE (5) FEET FROM THE EXTERIOR BUILDING WALL. THE EXACT LOCATION OF ALL DOWN SPOUTS CONNECTIONS SHALL BE PER THE ARCHITECTURAL PLANS.
4. CONTRACTOR SHALL NOT SHUT OFF WATER OR PLUG SANITARY SEWER IN MUNICIPAL LINES WITHOUT PRIOR APPROVAL.
5. MATERIALS FOR STORM SEWER SHALL BE AS FOLLOWS: STORM SEWER PIPE 48" OR LESS SHALL BE HIGH DENSITY POLYETHYLENE (HDPE) CORRUGATED PIPE WITH AN INTEGRALLY FORMED SMOOTH WATERWAY SUCH AS ADS N-12. FOR PIPE 10" OR LESS IN DIAMETER, PVC, ASTM D-3034, SDR-26, MAY ALSO BE USED. WHERE SPECIFICALLY REQUIRED, REINFORCED CONCRETE PIPE (RCP), ASTM C-76, CLASS III OR HIGHER, MAY BE USED. TRENCH SECTION SHALL BE CLASS "B" FOR PVC AND HDPE AND CLASS "C" FOR CONCRETE. MANHOLES, INLETS AND CATCH BASINS SHALL BE PRE CAST REINFORCED CONCRETE, ASTM C-478. CASTINGS SHALL BE HEAVY DUTY CAST IRON. AREA DRAINS SHALL BE ADS NYLOPLAST OR EQUIVALENT AND SHALL BE A MINIMUM OF 24" IN DIAMETER. CONNECTIONS TO EXISTING PIPES SHALL BE MADE WITH INSERTA WYE OR EQUIVALENT.
6. MATERIALS FOR SANITARY SEWER SHALL BE AS FOLLOWS: SANITARY SEWER SHALL BE PVC, ASTM D-3034, SDR-35 WITH RUBBER GASKETED JOINTS, CONFORMING TO ASTM D-3212. TRENCH SECTIONS SHALL BE CLASS "B" BEDDING. CRUSHED STONE CHIPS SHALL BE USED FOR BEDDING MATERIAL. CONNECTIONS SHALL BE MAD WITH A INSERTA WYE OR EQUIVALENT. A MINIMUM OF 6' OF COVER IS REQUIRED FOR ALL SANITARY SEWER.
7. MATERIALS FOR WATER SERVICES AND PRIVATE HYDRANTS SHALL BE AS FOLLOWS: WATER SERVICES SHALL BE PVC, HDPE, OR DI AS ALLOWED BY MUNICIPAL CODE, PVC SHALL BE AWWA C-900. DI SHALL BE AWWA C151, CLASS 52 (OR AS REQUIRED BY LOCAL CODE). TRENCH SECTIONS SHALL BE CLASS "B" BEDDING. CRUSHED STONE CHIPS SHALL BE USED FOR BEDDING MATERIAL. CONNECTION SHALL BE MADE WITH A WET TAP. CORPORATE STOP AND VALVE BOX PER MUNICIPAL STANDARDS. A MINIMUM OF 6' COVER IS REQUIRED FOR ALL WATERMAIN. VALVES SHALL BE NONRISING STEM, RESILIENT SEATED GATE VALVES COMPLYING WITH AWWA C509 WITH A THREE PIECE CAST IRON VALVE BOX. INSTALL THRUST BLOCKS AT ALL BENDS AND TEES. DISINFECT ALL NEW LINES AND OBTAIN SAFE WATER SAMPLE PRIOR TO USE.
8. EXTREME CAUTION MUST BE FOLLOWED REGARDING THE COMPACTION OF ALL UTILITY TRENCHES. MECHANICALLY COMPACTED GRANULAR BACKFILL IS REQUIRED UNDER & WITHIN 5 FEET OF ALL PAVEMENT INCLUDING SIDEWALKS. FLOODING OF BACKFILL MATERIAL IS NOT ALLOWED.
9. TRACER WIRE (NO. 8 SINGLE STRAND COPPER) AND WARNING TAPE SHALL BE INSTALLED ON ALL UTILITIES IN ACCORDANCE WITH THE LOCAL AND STATE CODES. TRACER WIRE SHALL TERMINATE IN A VALVECO TERMINAL BOX AT EACH END.
10. MANDREL TESTING ON SANITARY LINES AND PRESSURE TESTING ON WATERMAIN MAY BE REQUIRED BY THE OWNER OR MUNICIPALITY.
11. UPON COMPLETION OF FINAL PAVING OPERATIONS, THE UTILITY CONTRACTOR SHALL ADJUST ALL MANHOLE AND INLET RIMS AND VALVE BOXES TO FINISHED GRADE.

SPECIFICATIONS FOR PAVING

1. AGGREGATES USED IN THE CRUSHED STONE BASE SHALL CONFORM TO THE GRADATION REQUIREMENTS SECTIONS 301.2 AND 305.2.2 OF THE STANDARD SPECIFICATIONS. THICKNESS SHALL BE PER THE DETAIL ON THE PLANS. BASE SHALL BE ¾ INCH DIAMETER UNLESS NOTED OTHERWISE. RECYCLED MATERIALS MAY BE ALLOWED WITH APPROVAL FROM THE OWNER.
2. SUBGRADE SHALL BE PROOFROLLED AND APPROVED BY A GEOTECHNICAL ENGINEER PRIOR TO PLACEMENT OF STONE BASE. EXCAVATE UNSUITABLE AREAS AND REPLACE WITH BREAKER RUN STONE AND RECOMPACT. REFER TO THE GEOTECHNICAL REPORT FOR ADDITIONAL SPECIFICATIONS.
3. EXISTING PAVEMENT SHALL BE SAWCUT IN NEAT STRAIGHT LINES TO FULL DEPTH AT ANY POINT WHERE EXISTING PAVEMENT IS REMOVED. CURB AND WALK SHALL BE REMOVED TO THE NEAREST JOINT. REMOVED PAVEMENT SHALL BE REPLACED WITH THE SAME SECTION AS EXISTING. MUNICIPAL STANDARDS MAY REQUIRE ADDITIONAL WORK.
4. ASPHALT FOR PARKING AREAS AND THE PRIVATE ROAD SHALL BE PER THE DETAILS MATERIALS AND PLACEMENT SHALL CONFORM TO THE DOT STANDARD SPECIFICATIONS, SECTION 450 AND 460 TYPE E-0.3 IS REQUIRED UNLESS NOTED OTHERWISE. A COMMERCIAL GRADE MIX MAY BE SUBSTITUTED ONLY WITH APPROVAL FROM THE OWNER.
5. CONCRETE FOR CURB, DRIVEWAY, WALKS AND NON-FLOOR SLABS SHALL CONFORM TO SECTION 415 OF THE STANDARD SPECIFICATIONS , GRADE A, ASTM C-94, 6 BAG MIX, WITH A MINIMUM 28 DAY COMPRESSIVE STRENGTH OF 3,500 PSI. JOINTING SHALL BE PER SECTION 415.3.7 OF THE STANDARD SPECIFICATIONS WITH CONSTRUCTION JOINTS HAVING A MAXIMUM SPACING OF 10'. EXPANSION JOINTS SHALL BE PROVIDED EVERY 50'. CONCRETE SHALL BE FINISHED PER SECTION 415.3.8 WITH A MEDIUM BROOM TEXTURE. A CURING MEMBRANE IN CONFORMANCE WITH SECTION 415.3.12 IS REQUIRED.

NOTES:
1. MECHANICAL JOINTS FROM TEE TO VALVE AND FROM VALVE TO HYDRANT SHALL BE RESTRAINED WITH MEGALUG AND STAINLESS STEEL BOLTS.
2. ALL BOLTS SHALL BE STAINLESS STEEL BOLTS
3. REFER TO VILLAGE STANDARD SPECIFICATIONS FOR WATER MAIN CONSTRUCTION
4. HYDRANT SPECIFICATIONS = 2 EACH 6-1/2 INCH NST NOZZLE, 1 FACTORY INSTALLED 5-INCH STORZ CONNECTION AND CAP MANUFACTURES BY MUELLER.
5. PAINT SPECIFICATION = PLEASE REFER TO VS-0406 OF THE VILLAGE CONSTRUCTION SPECIFICATIONS.

SCALE: NTS

Standard Hydrant Assembly		DETAIL: W - 1
CREATED: 11-26-12	APPROVED BY: MATT FINEOUR	
REVISED: 1-26-15		

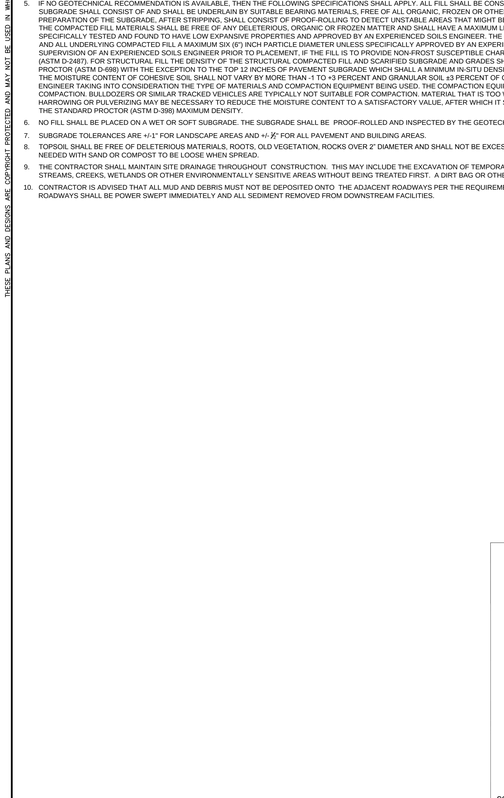

NOTES:
1. DROP PIPE AND FITTING SHALL BE SAME MATERIAL AND SIZE AS INCOMING SEWER. CONCRETE ENCASEMENT SHALL CURE FOR A MINIMUM IF 24 HOURS BEFORE TRENCH IS BACKFILLED.
2. MANHOLE TO BE IN ACCORDANCE WITH STANDARD VILLAGE OF PLEASANT PRAIRIE SANITARY MANHOLE DETAIL.
3. INVERT OF DROP SEWER IS TO BE THE SAME ELEVATION AS THE SPRING LINE OF THE LARGEST MAIN LINE SEWER PIPE

OUTSIDE DROP MANHOLE

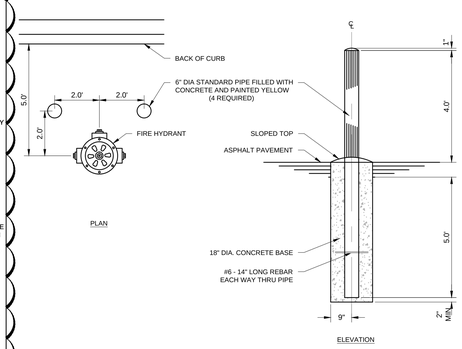

NOTES:
1. USE WHERE HYDRANT IS LOCATED WITHIN PAVED AREAS, COST INCIDENTAL.

HYDRANT BOLLARD

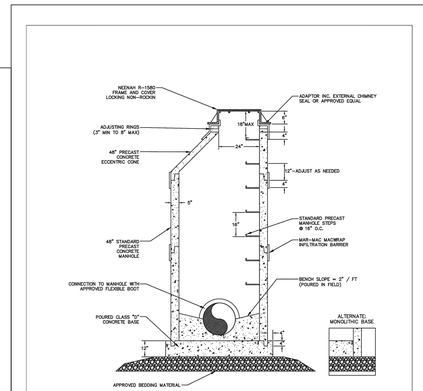

NOTE: REFER TO VILLAGE STANDARD SPECIFICATIONS FOR SANITARY SEWER.

SCALE: NTS

Standard Sanitary Manhole		DETAIL: SAN - 1
CREATED: 11-21-12	APPROVED BY: MIKE SPENCE	
REVISED: 1-29-14		

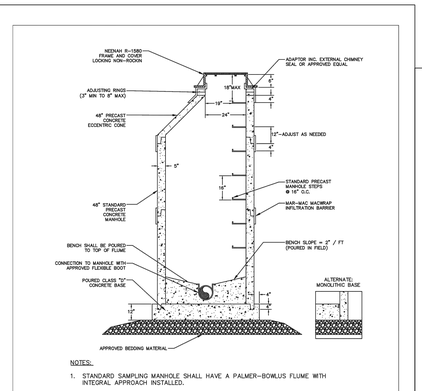

NOTES:
1. STANDARD SAMPLING MANHOLE SHALL HAVE A PALMER-BOWLUS FLUME WITH INTEGRAL APPROACH INSTALLED.
2. VILLAGE OF PLEASANT PRAIRIE DPW SHALL BE CONTACTED FOR FINAL INSPECTION OF SAMPLING MANHOLES.
3. SEE DETAIL SAN-2A AND SAN-2B FOR PALMER-BOWLUS FLUME DETAILS.
4. REFER TO VILLAGE STANDARD SPECIFICATIONS FOR SANITARY MANHOLES.

SCALE: NTS

Standard Sampling Manhole		DETAIL: SAN - 2
CREATED: 11-21-12	APPROVED BY: MIKE SPENCE	
REVISED: 1-29-14		

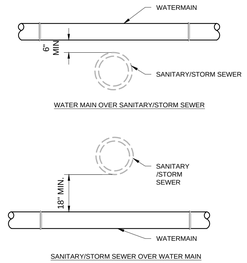

WATER MAIN OVER SANITARY/STORM SEWER

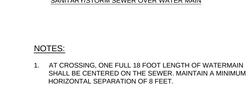

SANITARY/STORM SEWER OVER WATER MAIN

NOTES:
1. AT CROSSING, ONE FULL 18 FOOT LENGTH OF WATERMAIN SHALL BE CENTERED ON THE SEWER. MAINTAIN A MINIMUM HORIZONTAL SEPARATION OF 8 FEET.

WATER MAIN SEPARATION

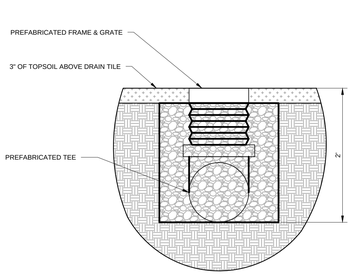

WISDOT NO. 1 GRADATION WASHED STONE SURROUNDED ON ALL SIDES WITH TYPE SAS FILTER FABRIC

AREA DRAIN

PINNACLE ENGINEERING GROUP
PLAN | DESIGN | DELIVER
www.pinnacle-engr.com
ENGINEERING | NATURAL RESOURCES | SURVEYING
WISCONSIN OFFICE: 15850 W. BLUEMOUND ROAD BROOKFIELD, WI 53005 (262) 754-8888
CHICAGO | MILWAUKEE | NATIONWIDE

ULINE CORP. CAMPUS CONF. CENTER
PLEASANT PRAIRIE

CONSTRUCTION DETAILS

REVISIONS

1	WDNR NOI SUBMITTAL	05-04-15	5	FINAL S & O SUBMITTAL	07-10-15
2	CONSTRUCTION PACKAGE 1	05-08-15			
3	ADDRESS VILLAGE COMMENTS	06-01-15			
4	ADDRESS VILLAGE COMMENTS/DSPS	06-09-15			

PEG JOB No. 115.008 | PEG PM: ABA | START DATE: 04/06/15 | SCALE

SHEET C-6 OF C-7

© COPYRIGHT 2015

www.pinnacle-engr.com

FOR CONSTRUCTION

CONSTRUCTION DETAILS

THESE PLANS AND DESIGNS ARE COPYRIGHT PROTECTED AND MAY NOT BE USED IN WHOLE OR IN PART WITHOUT THE WRITTEN CONSENT OF PINNACLE ENGINEERING GROUP, LLC

www.pinnacle-engr.com

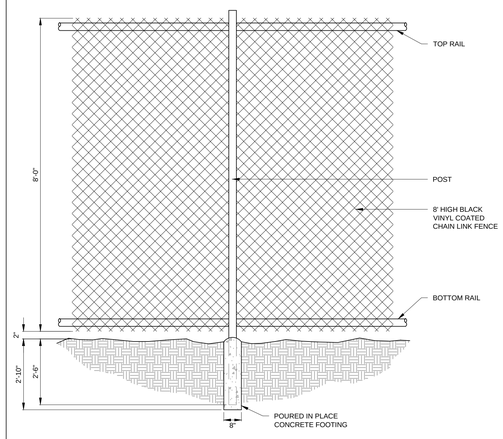

CHAIN LINK FENCE

#692 9/1991

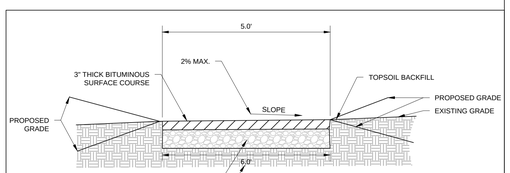

NOTE:
WHEN ORDERED BY THE ENGINEER, CONTRACTOR SHALL REPLACE UNSUITABLE FOUNDATION MATERIAL WITH 3-INCH CRUSHED STONE FOR SUBGRADE STABILIZATION. DEPTH OF SUBGRADE STABILIZATION ZONE MAY VARY. SUBGRADE STABILIZATION WORK SHALL BE PAID IN ACCORDANCE WITH THE UNIT PRICE GIVEN IN PROPOSAL.

ASPHALT WALKING TRAIL CROSS SECTION

#157 10-03-12

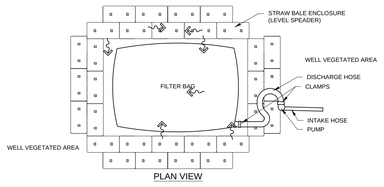

PLAN VIEW

ELEVATION VIEW

Table 1: Properties for Geotextile Bags

Property	Test Method	Type I Value	Type II Value
Maximum Apparent Opening Size	ASTM D-4751	0.212 mm	0.212 mm
Grab Tensile Strength	ASTM D-4632	200 lbs.	300 lbs.
Mullen Burst	ASTM D-3786	350 psi	580 psi
Permeability	ASTM D-4491	0.28 cm/sec	0.2 cm/sec
Fabric	Nominal Representative Weight	8 oz	12 oz

NOTES:

1. SITE DEWATERING SHALL BE IN ACCORDANCE WITH WDNR TECHNICAL STANDARD 1061.
2. FILTER BAG SHALL BE NON-WOVEN GEOTEXTILE WHICH RETAINS ALL SEDIMENT PARTICELS LARGER THAN 180 MICRONS.
3. FILTER BAG SHALL BE PLACED ON A STABLE, WEKK VEGETATED AREA WITH A GROUND SLOPE NOT EXCEEDING FIVE PERCENT (5%)
4. CLAMP PUMP DISCHARGE HOSE SECURELY INTO FILTER BAG.
5. LIMIT PUMPING RATE TO 1/2 THE MANUFACTUR'S MAXIMUM PUMPING RATE.
6. WHEN SEDIMENTS FILL 1/2 THE VOLUME OF A FILTER BAG, IMMEDIATELY REMOVE THAT BAG FROM SERVICE PROPERLY, DISPOSE OF SPENT BAGS WITH THEIR SEDIMENTS.
7. THERE IS TO BE NO DEWATERING ON-SITE WITHOUT FILTERING DISCHARGE.

DEWATERING USING SEDIMENT FILTER BAG

#192 07-01-15

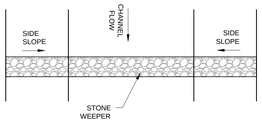

PLAN VIEW - CHANNEL

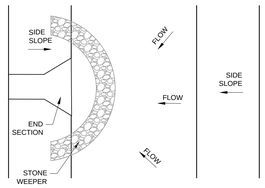

PLAN VIEW - END SECTION

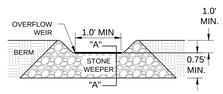

ELEVATION

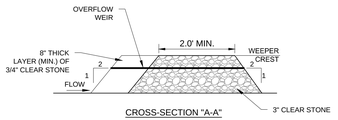

CROSS-SECTION "A-A"

NOTES:

1. STONE WEEPER SHALL BE CONSTRUCTED WITH 3 INCH CLEAR STONE.
2. THE OVERFLOW WEIR SHALL BE LOCATED 0.75' ABOVE BERM BOTTOM.
3. EXTEND STONE WEEPER ACROSS CHANNEL OPENING TO MEET SWALE/DITCH SIDE SLOPES. WHERE CHANNEL IS LESS THAN 3 FEET DEEP, REDUCE WEIR HEIGHT TO 1 FOOT AND INCREASE THE TOP OF STONE WEEPER FROM 2 FEET TO 4 FEET.

STONE WEEPER

#117 10-03-12

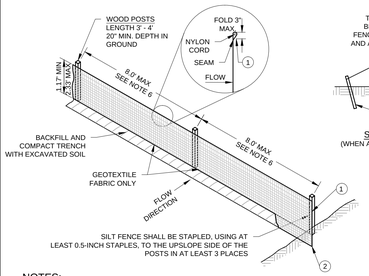

NOTES:

1. GEOTEXTILE FABRIC SHALL MEET THE REQUIREMENTS OF MATERIAL SPECIFICATION 592 GEOTEXTILE TABLE 1 OR 2, CLASS I WITH EQUIVALENT OPENING SIZE OF AT LEAST 30 FOR NONWOVEN AND 50 FOR WOVEN.
2. SILT FENCE SHALL BE ANCHORED BY SPREADING AT LEAST 8-INCHES OF FABRIC IN A 4-INCH WIDE AND 6-INCH DEEP TRENCH OR 6-INCH DEEP V-TRENCH ON THE UPSLOPE SIDE OF THE FENCE. TRENCHES SHALL NOT BE EXCAVATED WIDER OR DEEPER THAN NECESSARY FOR PROPER INSTALLATION.
3. FOLD MATERIAL TO FIT TRENCH AND BACKFILL AND COMPACT TRENCH WITH EXCAVATED SOIL.
4. WOOD POSTS SHALL BE A MINIMUM SIZE OF 1.125-INCHES x 1.125-INCHES OF DRIED OAK OR HICKORY.
5. SILT FENCE TO EXTEND ABOVE THE TOP OF PIPE, WHERE APPLICABLE.
6. POST SPACING SHALL BE SELECTED BASED ON GEOTEXTILE FABRIC (8-FEET FOR WOVEN AND 3-FEET FOR NON-WOVEN).

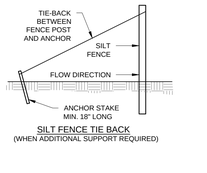

SILT FENCE TIE BACK
(WHEN ADDITIONAL SUPPORT REQUIRED)

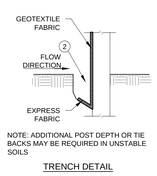

NOTE: ADDITIONAL POST DEPTH OR TIE BACKS MAY BE REQUIRED IN UNSTABLE SOILS

TRENCH DETAIL

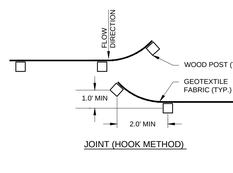

JOINT (HOOK METHOD)

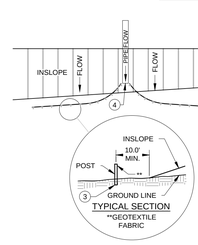

TYPICAL SECTION
**GEOTEXTILE FABRIC

SILT FENCE ALONG SLOPES & OUTFALLS

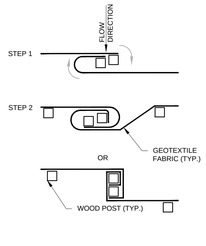

JOINT (TWIST METHOD)

SILT FENCE

#169 6-10-15

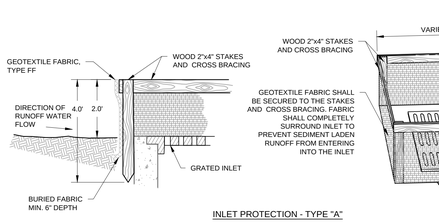

INLET PROTECTION - TYPE "A"

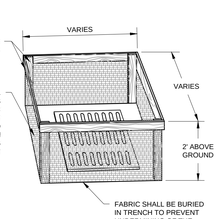

NOTES:

1. GEOTEXTILE FABRIC SHALL MEET THE REQUIREMENTS OF MATERIAL SPECIFICATION 592 GEOTEXTILE TABLE 1 OR 2, CLASS I, WITH AN EOS OF AT LEAST 30 FOR NONWOVEN AND 50 FOR WOVEN.
2. WHEN REMOVING OR MAINTAINING INLET PROTECTION, CARE SHALL BE TAKEN SO THAT THE SEDIMENT TRAPPED ON THE GEOTEXTILE FABRIC DOES NOT FALL INTO THE INLET. ANY MATERIAL FALLING INTO THE INLET SHALL BE REMOVED IMMEDIATELY.

(1) FINISHED SIZE, INCLUDING FLAP POCKET WHERE REQUIRED, SHALL EXTEND A MINIMUM OF 10 INCHES AROUND THE PERIMETER TO FACILITATE MAINTENANCE OR REMOVAL.

(2) FOR INLET PROTECTION, TYPE "C" (WITH CURB BOX), AN ADDITIONAL 18 INCHES OF FABRIC IS WRAPPED AROUND THE WOOD AND SECURED WITH STAPLES. THE WOOD SHALL NOT BLOCK THE ENTIRE HEIGHT OF THE CURB BOX OPENING.

(3) FLAP POCKETS SHALL BE LARGE ENOUGH TO ACCEPT WOOD 2x4.

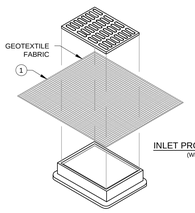

INLET PROTECTION - TYPE "B"
(WITHOUT CURB BOX)

TYPE "B" & "C" INSTALLATION NOTES

TRIM EXCESS FABRIC IN THE FLOW LINE TO WITHIN 3 INCHES OF THE GRATE.

THE CONTRACTOR SHALL DEMONSTRATE A METHOD OF MAINTENANCE, USING A SEWN FLAP, HAND HOLDS OR OTHER METHODS TO PREVENT ACCUMULATED SEDIMENT FROM ENTERING THE INLET.

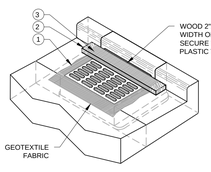

INLET PROTECTION, TYPE "C"
(WITH CURB BOX)

INLET PROTECTION

#154 04-16-15

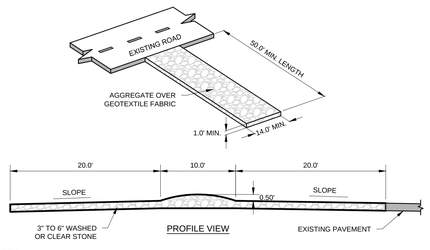

PROFILE VIEW

NOTES:

1. TRACKING PADS SHALL BE INSTALLED PRIOR TO ANY TRAFFIC LEAVING THE SITE. CONTRACTOR SHALL VERIFY LOCATION WITH OWNER.
2. THE AGGREGATE FOR TRACKING PADS SHALL MEET ONE OF THE FOLLOWING IDOT COARSE AGGREGATE GRADATIONS, CA-1, CA-2, CA-3, OR CA-4 AND BE PLACED ACCORDING TO CONSTRUCTION SPECIFICATIONS 25 ROCKFILL USING PLACEMENT METHOD 1 AND CLASS III COMPACTION.
3. THE AGGREGATE SHALL BE PLACED IN A LAYER AT LEAST 12-INCHES THICK. ON SITES WHERE SATURATED CONDITIONS ARE EXPECTED DURING THE LIFE OF THE PAD, THE PAD SHALL BE UNDERLAIN WITH GEOTEXTILE FABRIC WHICH MEETS MATERIAL SPECIFICATION 592 GEOTEXTILE, TABLE 1 OR 2, CLASS I, II OR IV, TO PREVENT MIGRATION OF UNDERLYING SOILS INTO THE STONE LAYER.
4. THE TRACKING PAD SHALL BE THE FULL WIDTH OF THE EGRESS POINT. MINIMUM WIDTH IS 14 FEET FOR ONE-WAY TRAFFIC AND 20 FEET FOR TWO-WAY TRAFFIC, WITH AN ADDITIONAL INCREASE OF 4 FEET FOR TRAILER TRAFFIC. THE TRACKING PAD SHALL BE A MINIMUM 50-FEET LONG.
5. ANY SEDIMENT TRACKED ONTO A PUBLIC OR PRIVATE ROAD SHOULD BE REMOVED BY STREET CLEANING, NOT FLUSHING, AT THE END OF EACH WORKING DAY.
6. TRACKING PADS SHALL, AT A MINIMUM, BE INSPECTED WEEKLY AND WITHIN 24-HOURS AFTER EVERY PRECIPITATION EVENT THAT PRODUCES 0.5-INCHES OF RAIN OR MORE DURING A 24-HOUR PERIOD.
7. THE TRACKING PAD PERFORMANCE SHALL BE MAINTAINED BY SCRAPING OR TOP-DRESSING WITH ADDITIONAL AGGREGATE.

CONSTRUCTION ENTRANCE

#1013 6-10-15

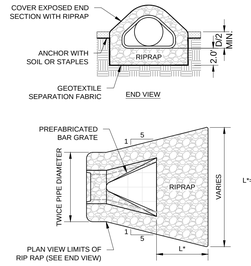

PLAN VIEW

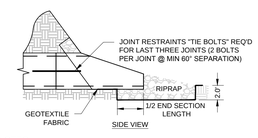

NOTES:

1. RIP RAP AND GEOTEXTILE FABRIC SHALL MEET REQUIREMENTS FOR STANDARD SPECIFICATIONS FOR HIGHWAY AND STRUCTURE CONSTRUCTION.

RIP RAP AT END SECTIONS

#104 2009-03

INLET PROTECTION

#154 04-16-15

DRAFTED: MRA
DESIGNED: ARA
REVIEWED: ARA

FOR CONSTRUCTION

CONSTRUCTION DETAILS

PLAN | DESIGN | DELIVER
www.pinnacle-engr.com
PINNACLE ENGINEERING GROUP
ENGINEERING | NATURAL RESOURCES | SURVEYING
WISCONSIN OFFICE:
15850 W. BLUEMOUND ROAD
BROOKFIELD, WI 53005
(262) 754-8888
CHICAGO | MILWAUKEE : NATIONWIDE

ULINE CORP. CAMPUS CONF. CENTER
PLEASANT PRAIRIE

CONSTRUCTION DETAILS

REVISIONS

1	WDNR NOI SUBMITTAL	05-04-15	5	FINAL S & O SUBMITTAL	07-10-15
2	CONSTRUCTION PACKAGE 1	05-08-15			
3	ADDRESS VILLAGE COMMENTS	06-01-15			
4	ADDRESS VILLAGE COMMENTS/DSPS	06-09-15			

PEG JOB No. 119.008
PEG PM ARA
START DATE 04/06/15
SCALE

SHEET C-7 OF C-7

© COPYRIGHT 2015

THIS DRAWING IS MADE SOLELY FOR THE INDIVIDUAL NAMED HEREIN AND IS THE PROPERTY OF DAVID J. FRANK LANDSCAPE CONTRACTING, INC. ANY UNAUTHORIZED USE OR DUPLICATION IS IN VIOLATION OF THE COPYRIGHT LAWS AND SUBJECT TO PROSECUTION.

All lawn repair to be Bluegrass sod.

(82)Moor Witch Moor Grass
(17)Karl Foerster Grass
(69)Black Eyed Susan

(42)Moor Witch Moor Grass
(33)Black Eyed Susan
(1)Slow Mound Mugo Pine

(16)Black Eyed Susan
(1)Slow Mound Mugo Pine

(40)Moor Witch Moor Grass
(45)Karl Foerster Grass

All lawn repair to be Bluegrass sod.

Stone Mulch Under Deck

Granite Fieldstone

PROPOSED BUILDING
FFE=735.00
SEE ARCH. PLANS
FOR ADDITIONAL
INFORMATION

(17)Karl Foerster Grass
(69)Black Eyed Susan
(44)Moor Witch Moor Grass

Manual Cut Edge Typ.

(25)Black Eyed Susan
(1)Slow Mound Mugo Pine

(1)Slow Mound Mugo Pine
(21)Black Eyed Susan
(36)Karl Foerster Grass

All lawn repair to be Bluegrass sod.

Granite Fieldstone

Stone Mulch Under Deck

0 8' 16' 32'

TO OBTAIN LOCATIONS OF PARTICIPANTS UNDERGROUND FACILITIES BEFORE YOU DIG IN WISCONSIN,
DIGGERS HOTLINE
CALL DIGGERS HOTLINE
1-800-242-8511
TOLL FREE
WI. STATUTE 182.0175(1974)
REQUIRES MIN. 3 WORK DAYS NOTICE BEFORE YOU EXCAVATE.
MEM. AREA-259-1181

ALCA Associated Landscape Contractors of America
ASLA American Society of Landscape Architects

Landscape Development for
ULINE Corp.
Conference Center
Pleasant Prairie, Wisconsin

David J. Frank
Design Group
N120 W21350 Freistadt Road
P.O. Box 70
Germantown, WI 53022
U.S.A.
Tel: (262) 255-4888
Fax: (262) 628-4729
Email: mail@davidjfrank.com

Landscape Development by
Vance C Barnes
RLA, LEED AP BD+C

Sheet 1 of 2

Date: 7/8/15
Revision:

Landscape Plan L101

Scale: 1" = 8''-0"

PLANTINGS, STRUCTURES AND OTHER REPRESENTATIONS SHOWN ON THIS PLAN ARE FOR THE PURPOSE OF CONVEYING LANDSCAPE DESIGN FEATURES. REFER TO PREPARED CONTRACT DOCUMENTS FOR SPECIFIC ITEMS INCLUDED IN ANY PARTICULAR PHASE OF LANDSCAPE CONSTRUCTION.

THIS DRAWING IS MADE SOLELY FOR THE INDIVIDUAL NAMED HEREIN AND IS THE PROPERTY OF DAVID J. FRANK LANDSCAPE CONTRACTING, INC. ANY UNAUTHORIZED USE OR DUPLICATION IS IN VIOLATION OF THE COPYRIGHT LAWS AND SUBJECT TO PROSECUTION.

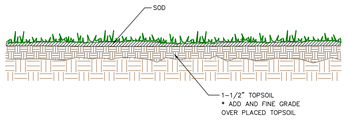

SOD INSTALLATION

Scale: Not To Scale

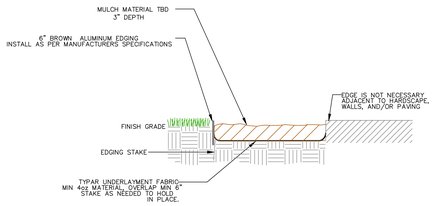

STONE MULCH

Scale: Not To Scale

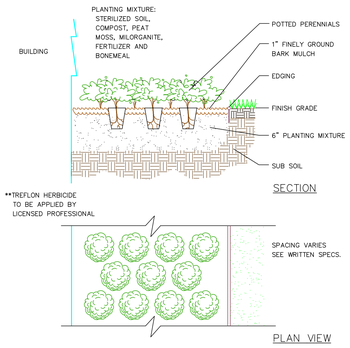

PERENNIAL PLANTING

Scale: Not To Scale

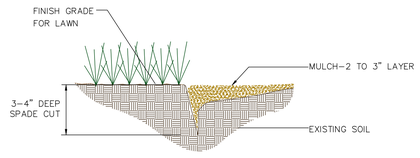

SPADE/NATURAL EDGE

Scale: Not To scale

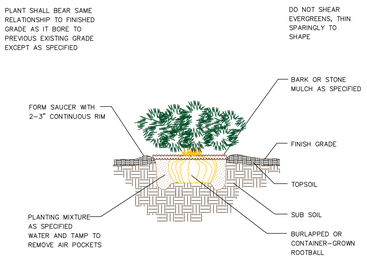

SHRUB PLANTING - EVERGREEN

Scale: Not To Scale

PLANT LIST

Qty.	Maturity HxW	Botanical Name	Common Name	Size/Cond.
4	4'x4'	Pinus mugo 'Slowmound'	Slowmound Mugo Pine	24" Cont.
115	5'x3'	Calamagrostis acutiflora 'Karl Foerster'	Karl Foerster Reed Grass	3 Gal. Cont.
208	3'x3'	Molinia caerulea 'Moorhexe'	Moor Witch Moor Grass	1 Gal. Cont.
225	3'x1.5'	Rudbeckia fulgida 'Goldsturm'	Goldsturm Black Eyed Susan	1 Gal. Cont.

Specifications:

1. Rough Grade: (by other) shall be within plus or minus 1/2" minus specified topsoil. Refer to plan for topsoil depths.

2. Topsoil: Shall be a natural fertile friable soil possessing characteristics of representative productive soils in the vicinity. It shall not be excessively acid or alkaline or contain toxic substances which may be harmful to plant growth. Topsoil shall be without admixtures of stone, stumps roots, debris or other objects 1" or more in diameter. Topsoil shall be lightly compacted, placed to a depth as specified. Topsoil for lawns to be at 6" depth.

3. Sod:
To be a Kentucky Bluegrass mix from a locally grown source. Stake all sod on slopes with wooden stakes cut to grade.

4. Fertilizer:
A. Turf: Use commercial grade slow release fertilizer formulated at 10-20-26 plus 2.5% Sulfur applied at 12lbs./1000sq.ft.
B. Planting: Use commercial grade three year slow release packets formulated at 10-10-10. Refer to manufacturer's specification for application rates.

5. Hydro-Mulch: Apply evenly over completed seed bed. Slopes greater than 3 to 1 shall be protected against erosion with "American Celsior Curlex (an erosion control fabric) Blanket" or equivalent. Highly erodible areas throughout the site shall be similarly stabilized.

6. Plantings: Plantings shall conform to standards currently recommended by "American Standards for Nursery Stock" and shall be equal to or exceed the size specified in the plant list. All plant material shall be nursery grown and planted as specified and in adequately sized planting pits with blended topsoil backfill. All stock is guaranteed for a period of one year after final acceptance. Refer to planting detail for additional specifications.

7.All planting beds shall be mulched with a minimum of 3" of shredded hardwood mulch.
All lawn trees shall have a 4' diameter mulch ring consisting of shredded hardwood mulch at a 2" depth.

8. Edging: Specified edging shall be 3'-4" spaded edge.

9. Maintain all newly landscaped areas for a period of 30 days. Owner to be responsible for adequate watering of plant material and turf areas after 30 days from substantial completion.

Maintenance Service for Trees. Shrubs, Groundcopver and Other Plants:
Maintain plantings by pruning, cultivcating, watering, weeding, fertilizing, mulching, restoring planting saucers, adjusting and repaitnr tree stabilization devices, resetting to proper grades or vertical position, and performing other operations as required to establish healthy, viable plantings. Spray or treat as required to keep trees and shrubs free of insects and disease.
Fill in as necessary soil subsidence that may occur because of settling or other processes. Replace mulch materials damaged or lost in areas of susidence.
Apply treatments as required to keep plant materials, planted areas and soils free of pests and pathogens or disease. Use integrated pest management practices whenever possuble to minimize the use of pesticides and reduce hazards. Treatments include physical controls such as hosing off foliage, mechanical controls such as traps and biological control agents.

Warranty; Installer agrees to repair or replace plantings and accessories that fail in materials, workmanship or growth with the specified warranty period. Failures include, but are not limited to the following:
a. Death and unsatisfactory growth, except for defects resulting from abuse, lack of adequate maintenance or neglect by the owner or incidents that are beyond the contractor's control.
b. Structural failures including plantings falling or blowing over.
c. Faulty performance of tree stabilization or edgings.
d. Deterioration of metals, metal finishes and other materials beyond normal weathering.
Include the following remedial actions as a minimum:
a. Immediately remove dead plants and replace unless required to in the succeeding planting season.
b. Replace plants that are more than 25 percent dead or in an unhealthy condition at the end of the warranty period.
c. A limit of one replacement of each plant will be required except for losses or replacements due to failure to comply with requirements.
d. During the warranty period, make as many periodic inspections as necessary, at no extra cost to the owner, to inspect plant material and determine what change, if any, shoul be made to the owner's maintenance program. Submit recommended changes to the owner in writing.

The warranty period for trees, shrubs, vines, ornamental grasses, groundcovers and perennials shall be 12 months from the date of planting.
Maintenance Service for Turf Areas:

Maintain and establish turf by watering, fertilizing, weeding, mowing, trimming, replanting and performing other operations as required to establish healthy, viable turf. Roll, regrade and replant bare or eroded areas and remulch to produce a uniformly smooth turf. Provide materials and installation the same as those used in the original installation.
Fill in as necessary soil subsidence that may occur because of settling or other processes. Replace materials and turf damaged or lost in the areas of subsidence.
In areas where mulch has been disturbed by wind or maintenance operations, add new mulch, and anchor as required to prevent displacement.
Apply treatments as required to keep turf and soil free of pests and pathogens and disease. Use integrated pest management practices whenever possible to minimize the use of pesticides and reduce hazards.
Schedule watering to prevent wilting, puddling, erosion and displacement of seed or mulch. Water furf with a fine spray at a minimum rate of 1 inch per week unless rainfall is adequate.
Mow turf as soon as top growth is tall enough to cut. repaeat mowing to maintain specified height without cutting more than 1/3 of the grass height. Remove no more than 1/3 of the grass leaf growth in initial or subsequent mowings. Do not delay mowing until grass blades bend over and become matted. Do not mow when grass is wet. Schedule initial and subsequent mowings to maintain the grass beween 2"-3". No mow Fescue areas are to be mowed at least twice a year.
Use fertilizer that will provide actual nitrogen of at least 1 lb/1000 sq. ft. of turf area.

TO OBTAIN LOCATIONS OF PARTICIPANTS UNDERGROUND FACILITIES BEFORE YOU DIG IN WISCONSIN

DIGGERS HOTLINE

CALL DIGGERS HOTLINE
1-800-242-8511
TOLL FREE
WIS. STATUTE 182.0175(1974) REQUIRES MIN. 3 WORK DAYS NOTICE BEFORE YOU EXCAVATE
MILW. AREA 259-1181

Landscape Details L201

Scale: Not to Scale

PLANTINGS, STRUCTURES AND OTHER REPRESENTATIONS SHOWN ON THIS PLAN ARE FOR THE PURPOSE OF CONVEYING LANDSCAPE DESIGN FEATURES. REFER TO PREPARED CONTRACT DOCUMENTS FOR SPECIFIC ITEMS INCLUDED IN ANY PARTICULAR PHASE OF LANDSCAPE CONSTRUCTION.

ALCA Associated Landscape Contractors of America

ASLA American Society of Landscape Architects

Landscape Development for
ULINE Corp.
Conference Center
Pleasant Prairie, Wisconsin

David J. Frank
Design Group
N120 W21350 Freistadt Road
P.O. Box 70
Germantown, WI 53022
U.S.A.
Tel: (262) 255-4888
Fax: (262) 628-4729
Email: mail@davidjfrank.com

Landscape Development by
Vance C Barnes
RLA, LEED AP BD+C

Sheet 2
of 2

Date: 7/8/15
Revision:

ABBREVIATIONS

A

A/E	ARCHITECT/ENGINEER
ADD	ADDENDUM
ADDL	ADDITIONAL
ADJ	ADJUSTABLE
ADJC	ADJACENT
AFF	ABOVE FINISH FLOOR
AL	ALUMINUM
ALT	ALTERNATE
APPROX	APPROXIMATE(LY)
ARCH	ARCHITECT(URAL)

B

BD	BOARD
BLDG	BUILDING
BLKG	BLOCKING
BM	BEAM
BO	BOTTOM OF
BOT	BOTTOM
BRKT	BRACKET
BS	BOTH SIDES
BTW	BETWEEN

C

CEN	CENT(ER) (TRAL)
CJ	CONTROL/CONSTRUCTION JOINT
CL	CENTER LINE
CLG	CEILING
CLR	CLEAR(ANCE)
CNTR	COUNTER
COL	COLUMN
CONC	CONCRETE
CONN	CONNEC(TION)
CONST	CONSTRUCTION
CONT	CONTINU(E) (OUS) (ATION)

D

D	DEEP, DEPTH
DEMO	DEMO(LISH) (LITION)
DET	DETAIL
DIA	DIAMETER
DIM	DIMENSION
DN	DOWN
DR	DOOR
DWG(S)	DRAWING(S)

E

EA	EACH
EJ	EXPANSION JOINT
EL	ELEVATION
ELEC	ELECTRIC(AL)
EQ	EQUAL
EQUIP	EQUIPMENT
EXCL	EXCLUD(E) (ED) (ING)
EXG	EXISTING
(E), EXIST	EXISTING
EXP	EXPAN(D) (SION)
EXT	EXTERIOR
EXTR	EXTERIOR

F

FAS	FASTEN(ED) (ER)
FSTR	FASTEN(ED) (ER)
FD	FLOOR DRAIN
FDN	FOUNDATION
FLR	FLOOR(ING)
FOM	FACE OF MASONRY
FT	FOOT, FEET
FTG	FOOTING

G

GA	GAUGE
GC	GENERAL CONTRACTOR

H

H	HIGH, HEIGHT
HT	HEIGHT
HD	HEAD
HM	HOLLOW METAL
HO	HOLD OPEN
HORIZ	HORIZONTAL
HR	HANDRAIL(S)

I

ID	INSIDE DIAMETER/DIMENSION
IN	INCH(ES)
INCL	INCLU(DE) (DED) (DING) (SIVE)
INSUL	INSULAT(E) (ED)
INT	INTERIOR
INTR	INTERIOR

J

JST	JOIST
JT	JOINT

K

KS	KNEE SPACE

L

L	ANGLE (STRUC SHAPE)
L	LONG, LENGTH
LAV	LAVATORY
LF	LINEAL FOOT, FEET
LT	LIGHT
LTG	LIGHTING
LVL	LEVEL

M

MAS	MASONRY
MATL	MATERIAL
MAX	MAXIMUM
MECH	MECHANICAL(LY)
MET	METAL
MTL	METAL
MIN	MINIMUM
MISC	MISCELLANEOUS
MO	MASONRY OPENING
MT(D)	MOUNT(ED)
MUL	MULLION

N

N/A	NOT APPLICABLE
NEC	NECESSARY
NIC	NOT IN CONTRACT
NO2	NITROUS OXIDE
NOM	NOMINAL
NTS	NOT TO SCALE

O

O	OXYGEN
O2	OXYGEN
OC	ON CENTER
OD	OUTSIDE DIAMETER/DIMENSION
OH	OVERHEAD
OH	OPPOSITE HAND
OPG	OPENING
OPP	OPPOSITE
OPT	OPTION(AL)

P

PAR	PARALLEL
PERIM	PERIMETER
PL	PLATE
PNL	PANEL
PR	PAIR
PTD	PAINTED
PTN	PARTITION
PTS	PNEUMATIC TUBE STATION

Q

QTY	QUANTITY

R

R	RADIUS, RADII
R	RISER
RCP	REFLECTED CEILING PLAN
RD	ROOF DRAIN
REF	REFER(ENCE)
REINF	REINFORC(E) (ED) (ING) (EMENT)
REQD	REQUIRED
REV	REVIS(E) (ED) (ION)
RM	ROOM
RO	ROUGH OPENING

S

SECT	SECTION
SF	SQUARE FOOT/FEET
SHT	SHEET(ING)
SHTG	SHEATHING
SIM	SIMILAR
SKLT	SKYLIGHT(S)
SPEC(S)	SPECIFICATION(S)
SS	STAINLESS STEEL
STD	STANDARD
STL	STEEL
STRUC	STRUCTUR(E) (AL)
SYM	SYMMETR(Y) (ICAL)

T

T	TREAD
T/D	TELEPHONE DATA OUTLET
TEL	TELEPHONE
TEMP	TEMPORARY
TO	TOP OF
TYP	TYPICAL

U

UC	UNDER CABINET
UNO	UNLESS NOTED OTHERWISE
UR	URINAL

V

VAC	VACUUM
VAR	VAR(Y) (IES) (IATION)
VEN	VENEER
VERT	VERTICAL

W

W	WIDE, WIDTH
W/	WITH
W/O	WITHOUT
WC	WATER CLOSET
WD	WOOD
WSCT	WAINSCOT

X

XP(D)	EXPOSE(D)

SPECIAL SYMBOLS			
@	AT	⊥	PERPENDICULAR
℄	CENTERLINE	#	NUMBER
ø	DIAMETER	/	PER
L	ANGLE(STRUC SHAPE)	±	PLUS/MINUS

6 ABBREVIATIONS

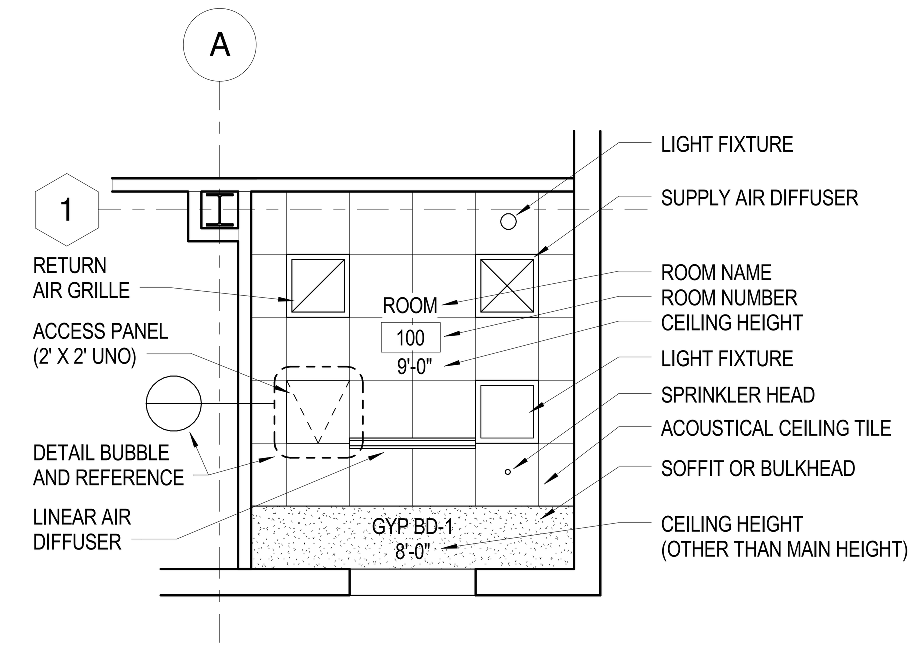

OTHER CEILING PLAN SYMBOL DESIGNATIONS	
RECESSED CAN DOWNLIGHT	TV CONNECTION (SEE ELECTRICAL DRAWINGS)
RECESSED CAN WALL WASHER	HORN (SEE ELECTRICAL DRAWINGS)
PENDANT MOUNTED LIGHT FIXTURE	TRACK LIGHT FIXTURE (SEE ELECTRICAL DRAWINGS)
CEILING-MOUNTED EXIT LIGHT (SEE ELECTRICAL DRAWINGS	EQUIPMENT MOUNTING TRACKS
WALL-MOUNTED EXIT LIGHT (SEE ELECTRICAL DRAWINGS)	SPRINKLER HEAD
SMOKE DETECTOR (SEE ELECTRICAL DRAWINGS)	SPEAKER (SEE ELECTRICAL DRAWINGS)

5 CEILING PLAN SYMBOL DESIGNATIONS

1/4" = 1'-0"

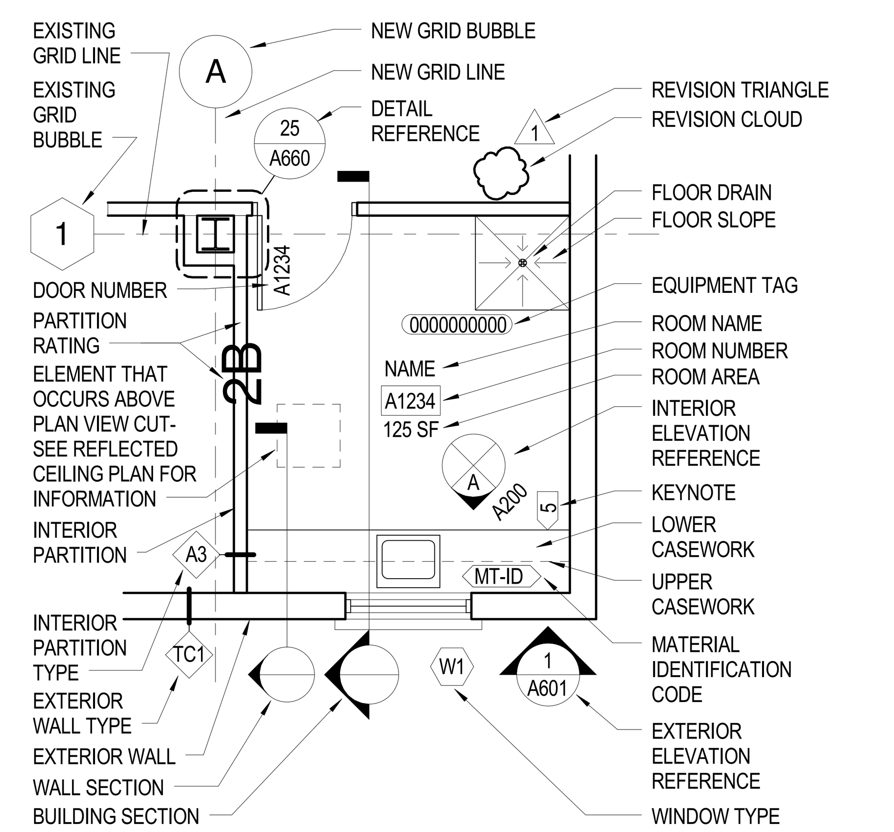

OTHER FLOOR PLAN SYMBOL DESIGNATIONS	
EXISTING DOOR TO REMAIN	EXISTING DOOR TO DEMO
EXISTING WALL TO REMAIN	EXISTING WALL TO DEMO

4 FLOOR PLAN SYMBOL DESIGNATIONS

1/4" = 1'-0"

A. THESE GENERAL NOTES APPLY TO THE CONSTRUCTION DOCUMENTS AND SHALL GOVERN UNLESS NOTED OTHERWISE BY GENERAL NOTES OR KEYNOTES ON SPECIFIC SHEETS.

B. COORDINATE ALL PROJECT PHASING WITH OWNER OR AS SPECIFIED AND/OR SHOWN ON THE DRAWINGS.

C. PROVIDE A SAFE MEANS OF EGRESS THROUGH AND/OR AROUND THE BUILDING AND SITE PER APPLICABLE CODES AT ALL TIMES DURING THE CONSTRUCTION PROCESS.

D. MINIMIZE NOISE TO LEVEL ACCEPTABLE WITH THE OWNER. SCHEDULE TASKS CREATING EXCESSIVE NOISE OR NEAR SENSITIVE AREAS WITH THE OWNER.

E. NOTIFY ARCHITECT PROMPTLY IF INFORMATION SHOWN IN ONE CONSTRUCTION DOCUMENT CONFLICTS WITH INFORMATION SHOWN ON ANOTHER.

F. NOTIFY ARCHITECT PROMPTLY IF CONSTRUCTION DOCUMENTS ARE INCONSISTENT WITH THE CURRENT APPLICABLE CODES AND REGULATIONS.

G. NOTIFY ARCHITECT PROMPTLY IF ANY EXISTING CONDITIONS CONFLICT WITH THE CONSTRUCTION DOCUMENTS.

H. STRUCTURAL STEEL MEMBER PROFILES AS INDICATED ON ARCHITECTURAL DRAWINGS MAY VARY FROM ACTUAL PROFILES AND SIZES INDICATED ON THE STRUCTURAL DRAWINGS WHICH SHALL GOVERN.

J. COORDINATE EXACT LOCATIONS OF LIGHT FIXTURES, SPEAKERS, SMOKE DETECTORS, EXIT LIGHTS, ACCESS PANELS, SPRINKLER HEADS, HVAC DUCTS, DIFFUSERS, REGISTERS, AND OTHER CEILING ITEMS WITH MECHANICAL, ELECTRICAL AND OTHER TRADES. NOTIFY ARCHITECT PROMPTLY IF ANY LOCATIONS CONFLICT WITH ARCHITECTURAL REFLECTED CEILING PLANS.

3 GENERAL NOTES

MATERIAL IDENTIFICATION CODES

ABBREV.	DESCRIPTION
AFS	ALUMINUM FRAMING SYSTEM
AP	ACCESS PANEL
BA	BUILDING ACCESSORIES
BT	BRICK TIE
CH	COAT HOOK
CMU	CONCRETE MASONRY UNIT
CONC FIN	CONCRETE FINISHES
CS	CONCRETE SEALER
CTB	CERAMIC TILE - BASE
CTF	CERAMIC TILE - FLOOR
CTW	CERAMIC TILE - WALL
CW	CURTAIN WALL (GLAZED ALUMINUM)
DM	DRAINAGE MEMBRANE
ETA	EXTRUDED TRANSITION ASSEMBLY
FE	FIRE EXTINGUISHER
FEC	FIRE EXTINGUISHER CABINET
FL MAT	FLOOR MAT AND FRAME
FRJS	FIRE RESISTIVE JOINT SYSTEM
FSTOP	FIRESTOPPING
GB	GRAB BARS
GL	GLASS, GLAZING
GRL	GRILLE (ARCHITECTURAL)
GRT	METAL GRATING
GYP BD	GYPSUM BOARD
GYP SHTG	GYPSUM SHEATHING
GYP TRIM	GYPSUM BOARD TRIM & ACCESSORIES
HORIZ REINF	HORIZONTAL WALL REINFORCEMENT
HPC	HIGH PERFORMANCE COATING
ICS	INFANT CHANGING STATION
INSUL	INSULATION
LFT UP	LIFT-UP FITTING
LKB	LOCK BOX
LVR	LOUVER (METAL)
LWC	LINEAR WOOD CEILING
MA	MASONRY ACCESSORIES
MB	MOISTURE BARRIER
MEMB FLASH	MEMBRANE FLASHING (NON-EXPOSED LINERS)
MET FAB	METAL FABRICATION
MET FURG	METAL FURRING (INTERIOR)
MET STR	METAL STAIR
MET STUD	METAL STUD FRAMING SYSTEM (INTERIOR)
MIR	MIRROR (FRAMED)
MP	MANUFACTURED METAL PANEL
OPGA	OPENING ASSEMBLIES
ORN RAIL	ORNAMENTAL METAL RAILING
PLAM	PLASTIC LAMINATE
PNLG	PANELING (WOOD)
PPT	PRESSURE PRESERVATIVE TREATED
PS	PROJECTION SCREEN
PT	PAINT
PTC	PAPER TOWEL CABINET
PTE	PAINT - EPOXY
R & S	ROD AND SHELF
RST	RESILIENT STAIR TREADS, RISERS & LANDINGS
SDG	SIDING
SDISP	SOAP DISPENSER
SIGN	IDENTIFYING DEVICE
SLNT	SEALANT
SMF	SHEET METAL FLASHING AND TRIM
SMR	SHEET METAL ROOFING
SND	SANITARY NAPKIN DISPOSAL
SSF	SOLID SURFACE FABRICATION
ST	STONE TILE
STL FURG	STEEL EXTERIOR FURRING (EXTERIOR)
STL STUD	STEEL STUD FRAMING SYSTEMS (EXTERIOR)
STN	STONE (EXTERIOR)
T COMP	TOILET COMPARTMENTS
TBM	TRAFFIC BEARING MEMBRANE
TPH	TOILET PAPER HOLDER
TRS	TRANSITION STRIP
TWF	THROUGH WALL FLASHING
UVB	VAPOR BARRIER - UNDERSLAB
VR	VAPOR RETARDER
WD	WOOD (TYPE AND FINISH)
WD BLKG	WOOD BLOCKING
WD FRMG	WOOD BLOCKING
WD SHTG	WOOD SHEATHING
WDB	WOOD BASE
WP	WATERPROOFING
WPS	WEEP SYSTEM
WRC	WASTE RECEPTACLE
WT	WINDOW TREATMENT

"MATERIAL IDENTIFICATION CODES" IS A LIST OF ACRONYMS UTILIZED ON THE DRAWINGS. MATERIAL ID'S ON THE DRAWINGS ALSO INCLUDE A NUMERICAL SUFFIX TO FURTHER DELINEATE AN ITEM. REFER TO SPECIFICATIONS FOR COMPLETE DESCRIPTION. WHERE THE SUFFIX IS "X" REFER TO ROOM FINISH OR DOOR SCHEDULE FOR MORE APPLICABLE INFO.

2 MATERIAL ID LIST

ACOUSTIC TILE	METAL
ASPHALT CONCRETE	PLASTER OR GYPSUM BOARD
BLANKET INSULATION	QUARRY TILE
CARPET (LARGE SCALE)	RIGID INSULATION
CERAMIC TILE	STONE - EXTERIOR
CONCRETE	SOLID WOOD FINISHED
CONCRETE MASONRY UNIT	TERRAZZO
EARTH	WOOD BLOCKING - CONTINUOUS
EXISTING CONSTRUCTION	WOOD BLOCKING - INTERRUPTED
FACEBRICK	WOOD SHEATHING
GRANULAR MATERIAL	MARBLE
GASKET (LARGE SCALE)	

1 ARCHITECTURAL MATERIAL DESIGNATIONS

HGA.
333 East Erie Street
Milwaukee, Wisconsin 53202
Telephone 414.278.8200

ULINE
12575 Uline Drive
Pleasant Prairie, WI 53158

ULINE SHIPPING SUPPLY SPECIALISTS

I HEREBY CERTIFY THAT THIS PLAN, SPECIFICATION OR REPORT WAS PREPARED BY ME OR UNDER MY DIRECT SUPERVISION AND THAT I AM A DULY LICENSED ARCHITECT UNDER THE LAWS OF THE STATE OF

NAME:
DATE: JULY 10, 2015
REGISTRATION NUMBER:

NO	DESCRIPTION	DATE
	CP-2	07/10/15

ISSUANCE HISTORY - THIS SHEET

HGA NO: 3595-001-00

GENERAL NOTES, ABBREVIATIONS AND SYMBOLS

DATE: May 8, 2015

CONSTRUCTION DOCUMENTS

A010

© COPYRIGHT HAMMEL, GREEN AND ABRAHAMSON, INC.

C:\Users\glrobertd\Documents\Revit Local Files\359500100_UlineConferenceCenter_glrobertd-PC7505.rvt
7/10/2015 9:26:58 AM

7/10/2015 9:27:02 AM C:\Users\jrobson\Documents\Revit Local Files\3595001109_UlineConferenceCenter_jrobson_PCP595.rvt

G SERIES

NONCOMBUSTIBLE

FIRE RESISTANCE: 1 HOUR SHAFT WALL PER AER - 09038 FOR HORIZONTAL APPLICATIONS

MINIMUM STC: 35
GA WP 7008

PTN WIDTH

INSUL-40 WHERE INDICATED
MET STUD-2
1 LAYER GYP BD-1
1 LAYER GYP BD-2

PLAN VIEW

PTN TYPE	STUD WIDTH	PTN WIDTH	NOTES	PTN TYPE	STUD WIDTH	PTN WIDTH	NOTES
G2	2 1/2"	3 1/8"					
G4	4"	4 5/8"					
G6	6"	6 5/8"					

G INTERIOR PARTITION TYPE- G SERIES

M SERIES

NONCOMBUSTIBLE

FIRE RESISTANCE:
SEE NOTE 1 BELOW

PTN WIDTH

CMU-1 FACE SHELL THICKNESS AS REQUIRED FOR FIRE RESISTIVE RATING

SEE ROOM FINISH SCHEDULE FOR FINISH MATERIAL (SHOWN DASHED)

MINIMUM STC: 45
GA WP1081

PLAN VIEW

PTN TYPE	STUD WIDTH	PTN WIDTH	NOTES	PTN TYPE	STUD WIDTH	PTN WIDTH	NOTES
M4	-	3 5/8"	1	M12	-	11 5/8"	4
M6	-	5 5/8"	1	M16	-	1'-3 5/8" (15 5/8")	4
M8	-	7 5/8"	3, 4				

NOTES:
1. 1 HOUR UL ---- @ M4_, UL U906 ALL OTHER PARTITIONS
   2 HOUR: UL U906 ALL PARTITIONS EXCEPT M4_
   3 HOUR: M8_,M10_, M12_ UL U904
   4 HOUR: M8_, M10_, M12_ UL U907

NOTES TO DETAILER
1. IF YOU HAVE ACOUSTICAL RATED MASONRY PARTITIONS NOTE THE DESIGN PARAMETERS HERE SUCH AS FILLING CORES WITH GROUT OF SAND.

M INTERIOR PARTITION TYPE- M SERIES

H SERIES

NONCOMBUSTIBLE

FIRE RESISTANCE:
NOT AVAILABLE

MINIMUM STC:

PTN WIDTH

SUBSTRATE
MET FURG-1 AT 1'-4" OC AT TYPE "H78" ONLY
1 LAYER GYP BD-1
MET FURG-2 AT 1'-4" OC

PLAN VIEW

PTN TYPE	STUD WIDTH	PTN WIDTH	NOTES	PTN TYPE	STUD WIDTH	PTN WIDTH	NOTES
H78	7/8"	1 1/2"	1	H2	2"	2 5/8"	2
H1	1"	1 5/8"	2	H3	3"	3 5/8"	2
H15	1 1/2"	2 1/8"	2				

NOTES:
1. <MET FURG-1> (HAT CHANNELS)
2. <MET FURG-2> (Z-FURRING)
3.

NOTES TO DETAILER
1. FURRING PARTITION TYPES ARE NOT TYPICALLY USED FOR ACOUSTIC RATINGS.
2. IF ACOUSTIC RATING IS REQUIRED, SHOW AND NOTE INSULATION IN GRAPHIC ABOVE.

H INTERIOR PARTITION TYPE- H SERIES

B SERIES

NONCOMBUSTIBLE

FIRE RESISTANCE:
NOT AVAILABLE

MINIMUM STC:

REFER TO PLANS AND DETAILS FOR PTN WIDTH
INSUL-40 WHEN INDICATED BY MODIFIER
MET STD-1 AT 1'-4" OC
1 LAYER GYP BD-1
METAL STUD BRACES AND RUNNERS TO STRUCTURAL SUPPORT

PLAN VIEW

PTN TYPE	STUD WIDTH	PTN WIDTH	NOTES	PTN TYPE	STUD WIDTH	PTN WIDTH	NOTES
B1	1 5/8"	2 1/4"	1	B4	4"	4 5/8"	2
B2	2 1/2"	3 1/8"	1	B6	6"	6 5/8"	2
B3	3 5/8"	4 1/4"	2				

NOTES:
1. PROVIDE BRACES TO BACK-UP AT 4'-0" ON CENTER MAXIMUM VERTICALLY
2. PROVIDE BRACES TO BACK-UP AT VERTICAL MIDPOINT OF STUD WHERE UNBRACED HEIGHT EXCEEDS 12'-0"
3.

B INTERIOR PARTITION TYPE- B SERIES

A SERIES

NONCOMBUSTIBLE

FIRE RESISTANCE: 1 HOUR
UL U448 @ A2_ ONLY,
UL U465 ALL OTHER PARTITIONS

MINIMUM STC: 45
GA WP1081

PTN WIDTH

INSUL-40 WHEN INDICATED BY MODIFIER
MET STUD-1 @ 1'-4" OC
1 LAYER GYP BD-1
EACH SIDE

PLAN VIEW

PTN TYPE	STUD WIDTH	PTN WIDTH	NOTES	PTN TYPE	STUD WIDTH	PTN WIDTH	NOTES
A2	2 1/2"	3 3/4"		A6	6"	7 1/4"	
A3	3 5/8"	4 7/8"		A8	8"	9 1/4"	
A4	4"	5 1/4"					

NOTES:
1.
2.
3.

A INTERIOR PARTITION TYPE- A SERIES

INTERIOR PARTITION TYPES

1. SERIES
THIS CHARACTER DENOTES THE ASSEMBLY SERIES TO WHICH THE WALL BELONGS.

2. METAL STUD/MASONRY UNIT SIZE DESIGNATOR
THIS CHARACTER DENOTES THE STUD OR FURRING WIDTH. FOR MASONRY, THIS CHARACTER INDICATES NOMINAL UNIT WIDTH.

3. MODIFIER
THIS CHARACTER DENOTES MODIFICATION(S) TO THE SERIES ASSEMBLY.

PARTITION NAMING LEGEND

A3d

1. SERIES
2. STUD/MASONRY SIZE DESIGNATOR
3. MODIFIER

2 PARTITION NAMING LEGEND

A. MINIMUM STC RATINGS INDICATED ARE BASED ON PARTITION TYPE WITH "a" MODIFIER ONLY

B. FILL EACH JOINT AND PENETRATION IN EACH PARTITION WITH INSULATION TO ACHIEVE ACOUSTIC RATING (STC). AND SEAL.

C. TYPICAL FLOOR PLAN DIMENSIONS FOR PARTITIONS ARE TO FINISH FACE OF GYPSUM BOARD OR MASONRY UNLESS NOTED OTHERWISE. MAINTAIN DIMENSION BETWEEN FACE OF FINISHES.

D. "CLEAR" OR "HOLD" DIMENSION DENOTES MINIMUM CLEARANCE REQUIRED BETWEEN PARTITION FINISHES.

E. TYPICAL GYPSUM BOARD PARTITION WIDTH IS BASED ON 5/8" GYPSUM BOARD UNLESS NOTED OTHERWISE.

G. PARTITION TYPES SHOW GENERAL REQUIREMENTS FOR PARTITIONS. REFER TO SPECIFICATIONS, PRODUCT TECHNICAL DATA AND REQUIREMENTS OF APPLICABLE TESTING AGENCIES FOR SPECIFICS OF PARTITION CONSTRUCTION REQUIREMENTS.

I. PARTITION REQUIREMENTS SHOWN ARE MINIMUM STANDARDS. WHERE ACTUAL CONDITIONS CAUSE PARTITION(S) TO EXCEED LIMITS, REINFORCE PARTITION(S) AS REQUIRED PER MANUFACTURER'S RECOMMENDATIONS.

J. PROVIDE FIRESTOPPING AT PENETRATIONS AND CONNECTIONS TO ADJACENT ASSEMBLIES IN FIRE-RATED PARTITIONS COMPLIANT WITH APPLICABLE TESTING AGENCY REQUIREMENTS.

K. REFER TO STRUCTURAL DRAWINGS FOR EXTENT AND DESCRIPTION OF INTERIOR STRUCTURAL WALLS NOT IDENTIFIED BY PARTITION TYPES AND/OR INDICATED AS: <STR>

L. PROVIDE BLOCKING OR BACKER MATERIAL FOR ATTACHMENT AND MOUNTING OF WALL HUNG ITEMS OR EQUIPMENT SHOWN ON A____.

M. FIRE AND/OR ACOUSTIC TEST REFERENCES CALLED OUT MAY VARY DEPENDING ON THE MANUFACTURER OF COMPONENTS ACTUALLY USED.

N. PROVIDE WATER RESISTANT GYPSUM BOARD (GYP BD-2) AT AREAS REQUIRED BY CODE AND WHERE FINISH WILL BE CERAMIC TILE UNLESS NOTED OTHERWISE.

O. PROVIDE TILE BACKER BOARD (GYP BD-23) AT SHOWER AREAS AND AT OTHER WET AREAS WHERE FINISH WILL BE CERAMIC TILE.

P. ENSURE FINISH SURFACES ARE FLUSH AND SEAMLESS WHERE PARTITIONS AND/OR FURRING ARE COPLANAR.

3 INTERIOR PARTITION GENERAL NOTES

STRUCTURE ABOVE
CEILING HEIGHT
FLOOR LINE
STUD
MASONRY
SIM

a - MODIFIER
EXTEND TOTAL PARTITION WITH INSULATION TO STRUCTURE

b - MODIFIER
EXTEND TOTAL PARTITION TO STRUCTURE, NO INSULATION

c - MODIFIER
STUDS TO STRUCTURE GYP BD AND INSULATION TO 4" ABOVE HIGHEST ADJACENT CEILING

d - MODIFIER
STUDS TO STRUCTURE GYP BD TO 4" ABOVE HIGHEST ADJACENT CEILING, NO INSULATION

BRACING AS REQUIRED OR INDICATED ON DETAILS

SEE DWG FOR HT
X'-X"

e - MODIFIER
EXTEND TOTAL PARTITION WITH INSULATION TO 4" ABOVE CEILING, PROVIDE BRACING AS NECESSARY

f - MODIFIER
EXTEND TOTAL PARTITION TO 4" ABOVE CEILING, PROVIDE BRACING AS NECESSARY, NO INSULATION

g - MODIFIER
EXTEND TOTAL PARTITION WITH INSULATION TO CEILING

h - MODIFIER
EXTEND TOTAL PARTITION TO CEILING, NO INSULATION

i - MODIFIER
PARTITION HEIGHT AS NOTED, SEE ABOVE DETAIL FOR OTHER REQUIREMENTS

TYPICAL INTERIOR PARTITION MODIFIERS (a - i)

1 INTERIOR PARTITION MODIFER KEY

R1
SMR-1
MB-3
INSUL-33 4"
STEEL ROOF DECK SEE STRUC.

4
SEE STRUCTURAL
2" MIN 4"
WP-7B
INSUL-1 2"
CAST-IN-PLACE CONCRETE VENEER SEE STRUC.
CAST-IN-PLACE CONCRETE FOUNDATION WALL SEE STRUC.

3
10 3/4"
3 1/2"
SDG-1
WD SHTG-2
STL FURG-2 2"
INSUL-2 2"
MB-1
GYP SHTG-2
STL STUD-1 6"
GYP BD-1 WHERE SHOWN

2
1'-2 7/8" +/-
7 1/4" 4" 3 5/8" +/-
STN-1
BT-3
INSUL-2 2"
MB-1
GYP SHTG-2
STL STUD-1 6"
GYP BD-1 WHERE SHOWN

1
SEE STRUCTURAL
11 5/8" +/-
2" 4" 2" 3 5/8" +/-
STN-1 GROUT SOLID
BT-2
INSUL-1 2"
WP-7B
CAST-IN-PLACE CONCRETE VENEER SEE STRUC.
CAST-IN-PLACE CONCRETE FOUNDATION WALL SEE STRUC.

0
SEE STRUCTURAL
INSUL-1 2"
WP-7B
CAST-IN-PLACE CONCRETE FOUNDATION WALL SEE STRUC.

5 EXTERIOR WALL TYPES
1 1/2" = 1'-0"

EXTERIOR CONSTRUCTION TYPES

hga.
333 East Erie Street
Milwaukee, Wisconsin 53202
Telephone 414.278.8200

ULINE
12575 Uline Drive
Pleasant Prairie, WI 53158

ULINE SHIPPING SUPPLY SPECIALISTS

I HEREBY CERTIFY THAT THIS PLAN, SPECIFICATION OR REPORT WAS PREPARED BY ME OR UNDER MY DIRECT SUPERVISION AND THAT I AM A DULY LICENSED ARCHITECT UNDER THE LAWS OF THE STATE OF

NAME:
DATE: JULY 10, 2015
REGISTRATION NUMBER:

NO	DESCRIPTION	DATE
	CP-2	07/10/15

ISSUANCE HISTORY - THIS SHEET

HGA NO: 3595-001-00

WALL TYPES, GENERAL NOTES & PARTITION NOTES

DATE: May 8, 2015

CONSTRUCTION DOCUMENTS

A011

© COPYRIGHT HAMMEL, GREEN AND ABRAHAMSON, INC.

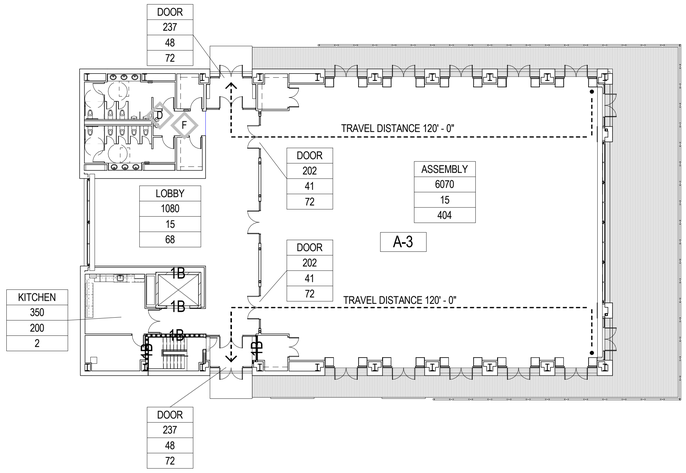

4 LIFE SAFETY PLAN - LEVEL 01
1/16" = 1'-0"

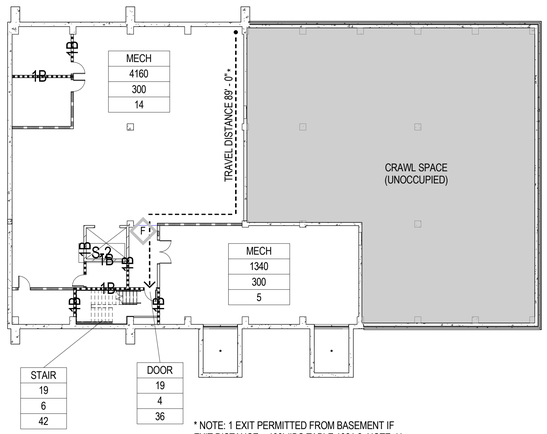

* NOTE: 1 EXIT PERMITTED FROM BASEMENT IF EXIT DISTANCE < 100' (IBC TABLE 1021.2, NOTE d.)

3 LIFE SAFETY PLAN - BASEMENT
1/16" = 1'-0"

LIFE SAFETY PLAN SYMBOL DESIGNATIONS

(SYMBOLS ONLY- SEE LIFE SAFETY PLANS FOR ACTUAL INFORMATION)

I-2	BUILDING CODE OCCUPANCY TYPE
	FUNCTION OF SPACE.
	TOTAL SQUARE FEET.
	OCCUPANT LOAD FACTOR.
	OCCUPANT LOAD.
	EXIT/EXIT-ACCESS COMPONENT (E.G., STAIR, DOOR).
	NUMBER OF OCCUPANTS USING EXIT/EXIT-ACCESS COMPONENT.
	MINIMUM REQUIRED CLEAR WIDTH (INCHES).
	AVAILABLE CLEAR WIDTH (INCHES).
###	NUMBER OF OCCUPANTS USING EXIT/EXIT-ACCESS COMPONENT.
	COMMON PATH OF TRAVEL OR EXIT ACCESS TRAVEL DISTANCE (#FT).
	TRAVEL DISTANCE TO NEAREST EXIT (FEET).

REQUIRED ASSEMBLY RATING

0	ZERO HOUR	
1	ONE HOUR RATED	
2	TWO HOUR RATED	
3	THREE HOUR RATED	
4	FOUR HOUR RATED	

TYPE OF ASSEMBLY

B	FIRE BARRIER	P	FIRE PARTITION
X	SMOKE PARTITIONS		

F FIRE EXTINGUISHER (MAXIMUM TRAVEL 75'-0")	S FIRE DEPARTMENT CONNECTION (SIAMESE CONNECTION)
D DRINKING FOUNTAIN	

	OCCUPANTS	WC REQ	WC PROV	LAV REQ	LAV PROV
FEMALE	247	4	5	2	3
MALE	247	4	5	2	3

2 PLUMBING FIXTURE TABULATION

OCCUPANCY CLASSIFICATION	A-3 ASSEMBLY/S-2 STORAGE
RATING REQUIREMENTS	
CONSTRUCTION CLASSIFICATION	TYPE IIIB
PRIMARY STRUCTURAL FRAME	0 HOUR
BEARING WALLS - EXTERIOR	2 HOUR
BEARING WALLS - INTERIOR	0 HOUR
NON-BEARING WALL - EXTERIOR <30'	NA
NON-BEARING WALL - EXTERIOR >30'	NA
NON-BEARING WALL - INTERIOR	0 HOUR
SHAFT ENCLOSURES	0 HOUR
FLOOR CONSTRUCTION & SECONDARY MEMBERS	0 HOUR
ROOF CONSTRUCTION & SECONDARY MEMBERS	0 HOUR

1 RATING SUMMARY

HGA
333 East Erie Street
Milwaukee, Wisconsin 53202
Telephone 414.278.8200

ULINE
12575 Uline Drive
Pleasant Prairie, WI 53158

ULINE
SHIPPING SUPPLY SPECIALISTS

I HEREBY CERTIFY THAT THIS PLAN, SPECIFICATION OR REPORT WAS PREPARED BY ME OR UNDER MY DIRECT SUPERVISION AND THAT I AM A DULY LICENSED ARCHITECT UNDER THE LAWS OF THE STATE OF

NAME:
DATE: JULY 10, 2015
REGISTRATION NUMBER:

NO	DESCRIPTION	DATE
	CP-1	05/08/15
	CP-2	07/10/15

ISSUANCE HISTORY - THIS SHEET

HGA NO: 3595-001-00

LIFE SAFETY PLAN

DATE: May 8, 2015

CONSTRUCTION DOCUMENTS

A020

© COPYRIGHT HAMMEL, GREEN AND ABRAHAMSON, INC.

7/10/2015 9:27:07 AM C:\Users\giroberd\Documents\Revit Local Files\3595001 00 UlineConferenceCenter_giroberd-PC7505.rvt

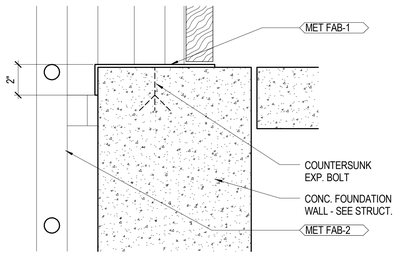

9 LADDER SILL DETAIL @ CRAWL SPACE
3" = 1'-0"

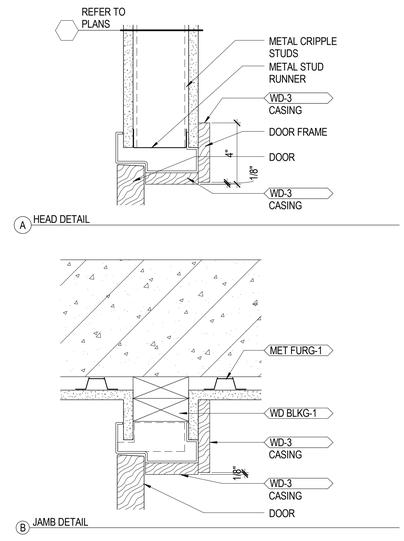

8 HOLLOW METAL FRAME DETAILS - MET STUD PTN
3" = 1'-0"

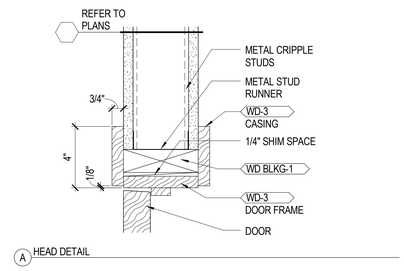

7 WOOD FRAME DETAILS - MET STUD PTN
3" = 1'-0"

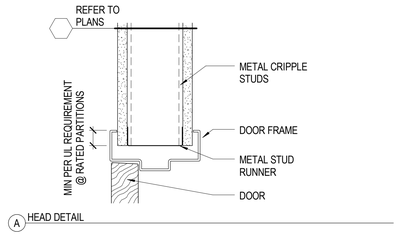

6 HOLLOW METAL FRAME DETAILS - MET STUD PTN
3" = 1'-0"

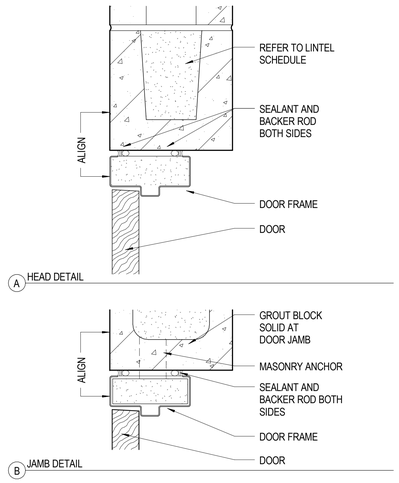

5 HOLLOW METAL FRAME DETAILS - MASONRY WALL
3" = 1'-0"

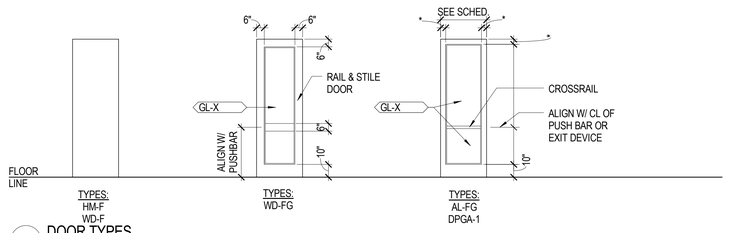

4 DOOR TYPES
1/4" = 1'-0"

* DIMENSION AS STANDARD W/ MANUFACTURER

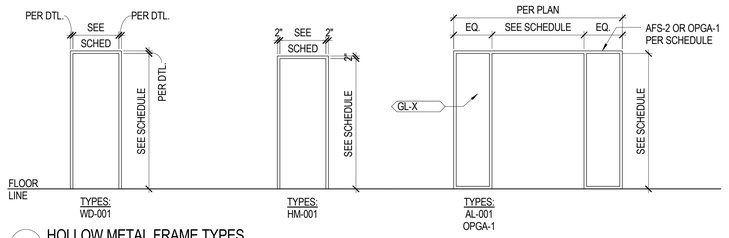

3 HOLLOW METAL FRAME TYPES
1/4" = 1'-0"

DOOR AND FRAME SCHEDULE

REVISION NUMBER	IDENTIFICATION		DOOR					FRAME				DETAIL				
	DOOR NUMBER	ROOM NAME	WIDTH	HEIGHT	TYPE	FINISH	GLAZING TYP	TYPE	FINISH	GLAZING TYP	RATING	HEAD	JAMB	SILL	HDWE GROUP	NOTES
	002	ELEC	3' - 0"	8' - 6"	HM-F	PT-X	--	HM-001	PT-X	--	45	5A/A080	5B/A080	--	54	
	003	TELE COMM	3' - 0"	8' - 6"	HM-F	PT-X	--	HM-001	PT-X	--		5A/A080	5B/A080	--	14	
	006	ELEV ROOM	3' - 0"	8' - 6"	HM-F	PT-X	--	HM-001	PT-X	--	45	5A/A080	5B/A080	--	34	
	008	OPEN STORAGE	3' - 0"	8' - 6"	HM-F	PT-X	--	HM-001	PT-X	--		5A/A080	5B/A080	--	14	
	020A	CRAWL SPACE	3' - 0"	4' - 0"	HM-F	PT-X	--	HM-001	PT-X	--		5A/A080	5B/A080	8/A080	19	
	020B	CRAWL SPACE	3' - 0"	4' - 0"	HM-F	PT-X	--	HM-001	PT-X	--		5A/A080	5B/A080	8/A080	19	
	022	MECH	6' - 0"	8' - 6"	HM-F	PT-X	--	HM-001	PT-X	--		5A/A080	5B/A080	--	44	
	100A	VEST. 1	6' - 0"	8' - 10"	AL-FG	PREFIN.	GL-21T	AL-001	PREFIN.	GL-21T		**	**	--	112	
	100B	VEST. 1	6' - 0"	8' - 10"	OPGA-1	PREFIN.	GL-62	OPGA-1	PREFIN.	GL-62		**	**	--	111	
	101	COATS 1	3' - 0"	8' - 10"	WD-F	PREFIN.	--	WD-001	PREFIN.	--		7A/A080	7B/A080	--	10	
	102	MENS	3' - 0"	8' - 10"	WD-F	PREFIN.	--	WD-001	PREFIN.	--		7A/A080	7B/A080	--	90	
	103	WOMENS	3' - 0"	8' - 10"	WD-F	PREFIN.	--	WD-001	PREFIN.	--		7A/A080	7B/A080	--	90	
	104	COATS 2	3' - 0"	8' - 10"	WD-F	PREFIN.	--	WD-001	PREFIN.	--		7A/A080	7B/A080	--	10	
	107	CATERING SUPPORT	6' - 0"	8' - 10"	WD-F	PREFIN.	--	HM-001	PT-X	--		6A/A080	6B/A080	--	43H	2.
	108	STO.	3' - 0"	8' - 10"	WD-F	PREFIN.	--	HM-001	PT-X	--		6A/A080	6B/A080	--	14	
	110A	VEST. 2	6' - 0"	8' - 10"	AL-FG	PREFIN.	GL-21T	AL-001	PREFIN.	GL-21T		**	**	--	112	
	110B	VEST. 2	6' - 0"	8' - 10"	OPGA-1	PREFIN.	GL-62	OPGA-1	PREFIN.	GL-62	45	**	**	--	113	
	120A	MAIN CONFERENCE ROOM	6' - 0"	8' - 10"	WD-FG	PREFIN.	GL-15	WD-X	PREFIN.	SEE ELEV.		SEE ELEV	SEE ELEV	--	111	1.
	120B	MAIN CONFERENCE ROOM	6' - 0"	8' - 10"	WD-FG	PREFIN.	GL-15	WD-X	PREFIN.	SEE ELEV.		SEE ELEV	SEE ELEV	--	111	1.
	120C	MAIN CONFERENCE ROOM	6' - 0"	8' - 10"	WD-FG	PREFIN.	GL-15	WD-X	PREFIN.	SEE ELEV.		SEE ELEV	SEE ELEV	--	111	1.
	120D	MAIN CONFERENCE ROOM	6' - 0"	8' - 10"	AL-FG	PREFIN.	GL-21T	AL-001	PREFIN.	GL-21T		**	**	--	110	
	120E	MAIN CONFERENCE ROOM	6' - 0"	8' - 10"	AL-FG	PREFIN.	GL-21T	AL-001	PREFIN.	GL-21T		**	**	--	110	
	120F	MAIN CONFERENCE ROOM	6' - 0"	8' - 10"	AL-FG	PREFIN.	GL-21T	AL-001	PREFIN.	GL-21T		**	**	--	110	
	120G	MAIN CONFERENCE ROOM	6' - 0"	8' - 10"	AL-FG	PREFIN.	GL-21T	AL-001	PREFIN.	GL-21T		**	**	--	110	
	120H	MAIN CONFERENCE ROOM	6' - 0"	8' - 10"	AL-FG	PREFIN.	GL-21T	AL-001	PREFIN.	GL-21T		**	**	--	110	
	120J	MAIN CONFERENCE ROOM	6' - 0"	8' - 10"	AL-FG	PREFIN.	GL-21T	AL-001	PREFIN.	GL-21T		**	**	--	110	
	120K	MAIN CONFERENCE ROOM	6' - 0"	8' - 10"	AL-FG	PREFIN.	GL-21T	AL-001	PREFIN.	GL-21T		**	**	--	110	
	120L	MAIN CONFERENCE ROOM	6' - 0"	8' - 10"	AL-FG	PREFIN.	GL-21T	AL-001	PREFIN.	GL-21T		**	**	--	110	
	120M	MAIN CONFERENCE ROOM	6' - 0"	8' - 10"	AL-FG	PREFIN.	GL-21T	AL-001	PREFIN.	GL-21T		**	**	--	110	
	120N	MAIN CONFERENCE ROOM	6' - 0"	8' - 10"	AL-FG	PREFIN.	GL-21T	AL-001	PREFIN.	GL-21T		**	**	--	110	
	120P	MAIN CONFERENCE ROOM	6' - 0"	8' - 10"	AL-FG	PREFIN.	GL-21T	AL-001	PREFIN.	GL-21T		**	**	--	110	
	120Q	MAIN CONFERENCE ROOM	6' - 0"	8' - 10"	AL-FG	PREFIN.	GL-21T	AL-001	PREFIN.	GL-21T		**	**	--	110	
	121	STO. 1	5' - 0"	8' - 10"	WD-F	PREFIN.	--	WD-001	PREFIN.	--		7A/A080	7B/A080	--	29	
	122	STO. 2	5' - 0"	8' - 10"	WD-F	PREFIN.	--	WD-001	PREFIN.	--		7A/A080	7B/A080	--	29	
	S001	STAIR	3' - 0"	8' - 6"	HM-F	PT-X	--	HM-001	PREFIN.	--	45	5A/A080	5B/A080	--	30	
	S101	STAIR	3' - 0"	8' - 10"	WD-F	PREFIN.	--	HM-001	PREFIN.	--		5A/A080	5B/A080	--	34	

1. SEE INTERIOR ELEVATION FOR FRAME TYPE

2. WOOD CLAD FRAME - SEE DETAILS
**DETAIL AS STANDARD W/ MANUFACTURER

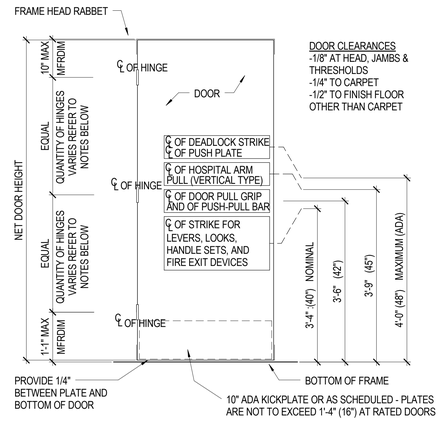

GENERAL NOTES
A. INFORMATION SHOWN HERE IS FOR REFERENCE ONLY.
B. REFER TO DOOR AND FRAME DETAILS FOR VARIATIONS TO THIS DETAIL.
C. REVISIONS AS PER MANUFACTURER AND LOCAL CODE VARIATIONS ARE TO BE SUBMITTED FOR REVIEW AND FINAL APPROVAL.
D. USE 3 HINGES FOR DOORS UP TO INCLUDING 7'-8".
E. ADD 1 HINGE FOR EACH 2'-6" IN HEIGHT OR FRACTION THEREOF AND FOR DOORS GREATER THAN 3'-6" IN WIDTH.
F. ALL OPERATING HARDWARE SHALL BE MOUNTED BETWEEN 2'-6" (30") AND 4'-0" (48") ABOVE FINISHED FLOOR UNLESS DIRECTED OTHERWISE BY APPLICABLE CODES.
G. EXTEND DOOR OPENING JAMBS AND DOOR-TO DOOR MULLIONS 1/8" BELOW THE FINISH FLOOR ELEVATION WHEN THE FLOOR FINISH IS TO BE INSTALLED AFTER FRAME.

2 DOOR HARDWARE LOCATIONS
3/4" = 1'-0"

A. FOR FRAME AND GLASS TYPES REFER TO PLANS, DOOR AND FRAME SCHEDULE, ELEVATIONS AND DETAILS.

B. INSTALL TEMPERED GLASS PER CODE

C. REFER TO PLANS FOR INTERIOR PARTITION TYPES AND EXTERIOR WALL TYPES.

D. HOLLOW METAL FRAMES AT MASONRY PARTITIONS SHALL BE GROUTED SOLID.

E. HOLLOW METAL FRAMES AT METAL STUD PARTITIONS SHALL BE SPOT GROUTED AT ALL FRAME ANCHORS WITH JOINT COMPOUND.

F. REFER TO DOOR AND FRAME SCHEDULE FOR FRAME WIDTHS AND FOR DOOR INFORMATION.

1 DOOR AND FRAME GENERAL NOTES

hga
333 East Erie Street
Milwaukee, Wisconsin 53202
Telephone 414.278.8200

ULINE
12575 Uline Drive
Pleasant Prairie, WI 53158

ULINE
SHIPPING SUPPLY SPECIALISTS

I HEREBY CERTIFY THAT THIS PLAN, SPECIFICATION, OR REPORT WAS PREPARED BY ME OR UNDER MY DIRECT SUPERVISION AND THAT I AM A (DLEY LICENSED ARCHITECT UNDER THE LAWS OF THE STATE OF

NAME:
DATE: JULY 10, 2015
REGISTRATION NUMBER:

NO	DESCRIPTION	DATE
	CP-2	07/10/15

ISSUANCE HISTORY - THIS SHEET

HGA NO: 3595-001-00

DOOR AND FRAME SCHEDULE

DATE: May 8, 2015

CONSTRUCTION DOCUMENTS

A080

© COPYRIGHT HAMMEL, GREEN AND ABRAHAMSON, INC.

7/10/2015 9:27:20 AM C:\Users\gridsted\Documents\Revit Local Files\3595001\0_UlineConferenceCenter_gridsted.PCP505.rvt

ROOM FINISH SCHEDULE

REVISION NUMBER	ROOM NUMBER	ROOM NAME	FLOOR		WALLS				CEILING		CASEWORK		NOTES
			FINISH	BASE	NORTH	EAST	SOUTH	WEST	MATL	FINISH	CABINET	COUNTERTOP	
	1	STAIR	CPT-1	RB-1	PT-2	PT-2	PT-2	PT-2	GYP-1	PT-1			
	1	STAIR	CPT-1	RB-1	PT-2	PT-2	PT-2	PT-2	GYP-1	PT-1			
	002	ELEC	CS-1	RB-1	PT-2	PT-2	PT-2	PT-2	OTS	PT-1			
	003	TELE COMM	CS-1	RB-1	PT-2	PT-2	PT-2	PT-2	OTS	PT-1			
	005	OPEN STORAGE	CS-1	RB-1	PT-2	PT-2	PT-2	PT-2	OTS	PT-1			
	006	ELEV ROOM	CS-1	RB-1	PT-2	PT-2	PT-2	PT-2	OTS	PT-1			
	008	JANITOR CLOSET	CS-1	RB-1	PT-2	PT-2	PT-2	PT-2	OTS	PT-1			
	020	CRAWL SPACE	-	-	PT-2	PT-2	PT-2	PT-2	-	PT-1			
	022	MECH	CS-1	RB-1	PT-2	PT-2	PT-2	PT-2	OTS	PT-1			
	100	VEST. 1	FL MAT-1	WDB-1	PT-2	PT-2	PT-2	PT-2	GYP-1	PT-1			
	101	COATS 1	CPT-1	WDB-1	PT-2	PT-2	PT-2	PT-2	GYP-1	PT-1			
	102	MENS	CTF-1	CTB-1	PT-2	PT-2	PT-2	CTW-1/PT-2	GYP-2	PT-1	PLAM-1	SSF-1	
	103	WOMENS	CTF-1	CTB-1	PT-2	CTW-1/PT-2	PT-2	PT-2	GYP-2	PT-1	PLAM-1	SSF-1	
	104	COATS 2	CPT-1	WDB-1	PT-2	PT-2	PT-2	PT-2	GYP-1	PT-1			
	105	LOBBY	CPT-1	WDB-1	WD-1/PNLG-2/PT-2	PNLG-2/PT-2	WD-1/PNLG-1	PNLG-2/PT-2	LWC-1				
	105	LOBBY											
	106	ELEV.	CPT-1	WDB-1	PT-2	PT-2	PT-2	PT-2	GYP-1	PT-1			
	107	CATERING SUPPORT	CTF-1	CTB-1	PT-2	PT-2	PT-2	PT-2	GYP-1	PT-1	PLAM-1	PLAM-1	
	108	STO.	CTF-1	CTB-1	PT-2	PT-2	PT-2	PT-2	GYP-1	PT-1			
	110	VEST. 2	FL MAT-1	WDB-1	PT-2	PT-2	PT-2	PT-2	GYP-1	PT-1			
	120	MAIN CONFERENCE ROOM	CPT-1	WDB-1	WD-1/PNLG-2/PNLG-1	WD-1/PNLG-2/PT-2	WD-1/PT-2	WD-1/PNLG-2/PT-2	LWC-1				
	121	STO. 1	CPT-1	WDB-1	PT-2	PT-2	PT-2	PT-2	GYP-1	PT-1			
	122	STO. 2	CPT-1	WDB-1	PT-2	PT-2	PT-2	PT-2	GYP-1	PT-1			

Room Finish Schedule Notes

hga
333 East Erie Street
Milwaukee, Wisconsin 53202
Telephone 414.278.8200

ULINE
12575 Uline Drive
Pleasant Prairie, WI 53158

ULINE
SHIPPING SUPPLY SPECIALISTS

I HEREBY CERTIFY THAT THIS PLAN, SPECIFICATION OR REPORT WAS PREPARED BY ME OR UNDER MY DIRECT SUPERVISION AND THAT I AM A DULY LICENSED ARCHITECT UNDER THE LAWS OF THE STATE OF

NAME:
DATE: JULY 10, 2015
REGISTRATION NUMBER:

NO	DESCRIPTION	DATE
	CP-2	07/10/15

ISSUANCE HISTORY - THIS SHEET

HGA NO: 3595-001-00

ROOM FINISH SCHEDULE AND EQUIPMENT SCHEDULE

DATE: May 8, 2015

CONSTRUCTION DOCUMENTS

A090

© COPYRIGHT HAMMEL, GREEN AND ABRAHAMSON, INC.

7/10/2015 9:27:23 AM C:\Users\gholland\Documents\Revit Local Files\3595001100_UlineConferenceCenter_gholland.RVT5515.rvt

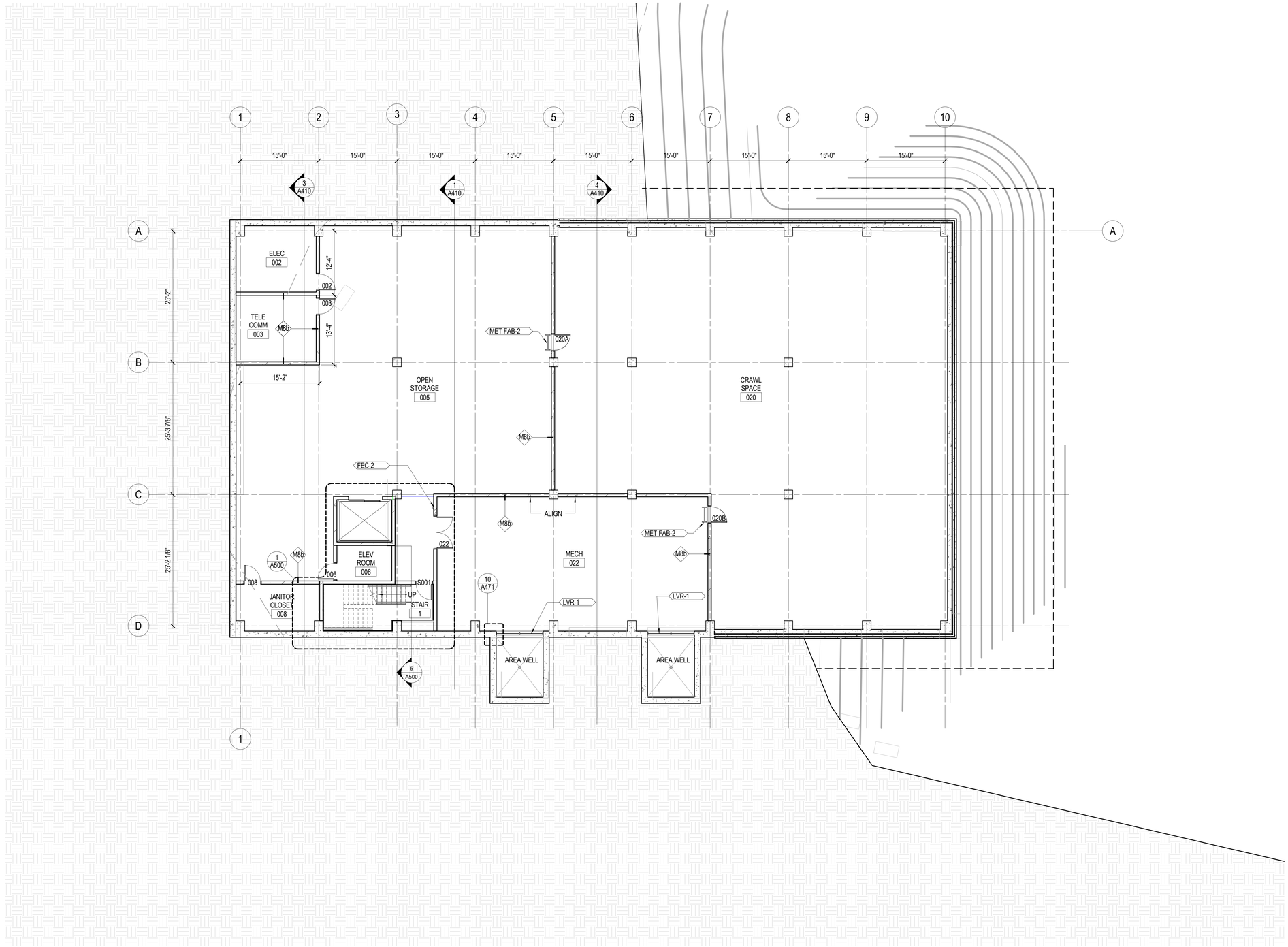

1 FLOOR PLAN - LOWER LEVEL
1/8" = 1'-0"

333 East Erie Street
Milwaukee, Wisconsin 53202
Telephone 414.278.8200

ULINE
12575 Uline Drive
Pleasant Prairie, WI 53158

ULINE
SHIPPING SUPPLY SPECIALISTS

I HEREBY CERTIFY THAT THIS PLAN, SPECIFICATION OR REPORT WAS PREPARED BY ME OR UNDER MY DIRECT SUPERVISION AND THAT I AM A DULY LICENSED ARCHITECT UNDER THE LAWS OF THE STATE OF

NAME:
DATE: JULY 10, 2015
REGISTRATION NUMBER:

NO	DESCRIPTION	DATE
	CP-1	05/08/15
	CP-2	07/10/15

ISSUANCE HISTORY - THIS SHEET

HGA NO: 3595-001-00

LOWER LEVEL FLOOR PLAN

DATE: May 8, 2015

CONSTRUCTION DOCUMENTS

A200

© COPYRIGHT HAMMEL, GREEN AND ABRAHAMSON, INC.

7/10/2015 9:27:26 AM C:\Users\gtroberts\Documents\Revit Local Files\359500100_UlineConferenceCenter_gtroberts-PC7505.rvt

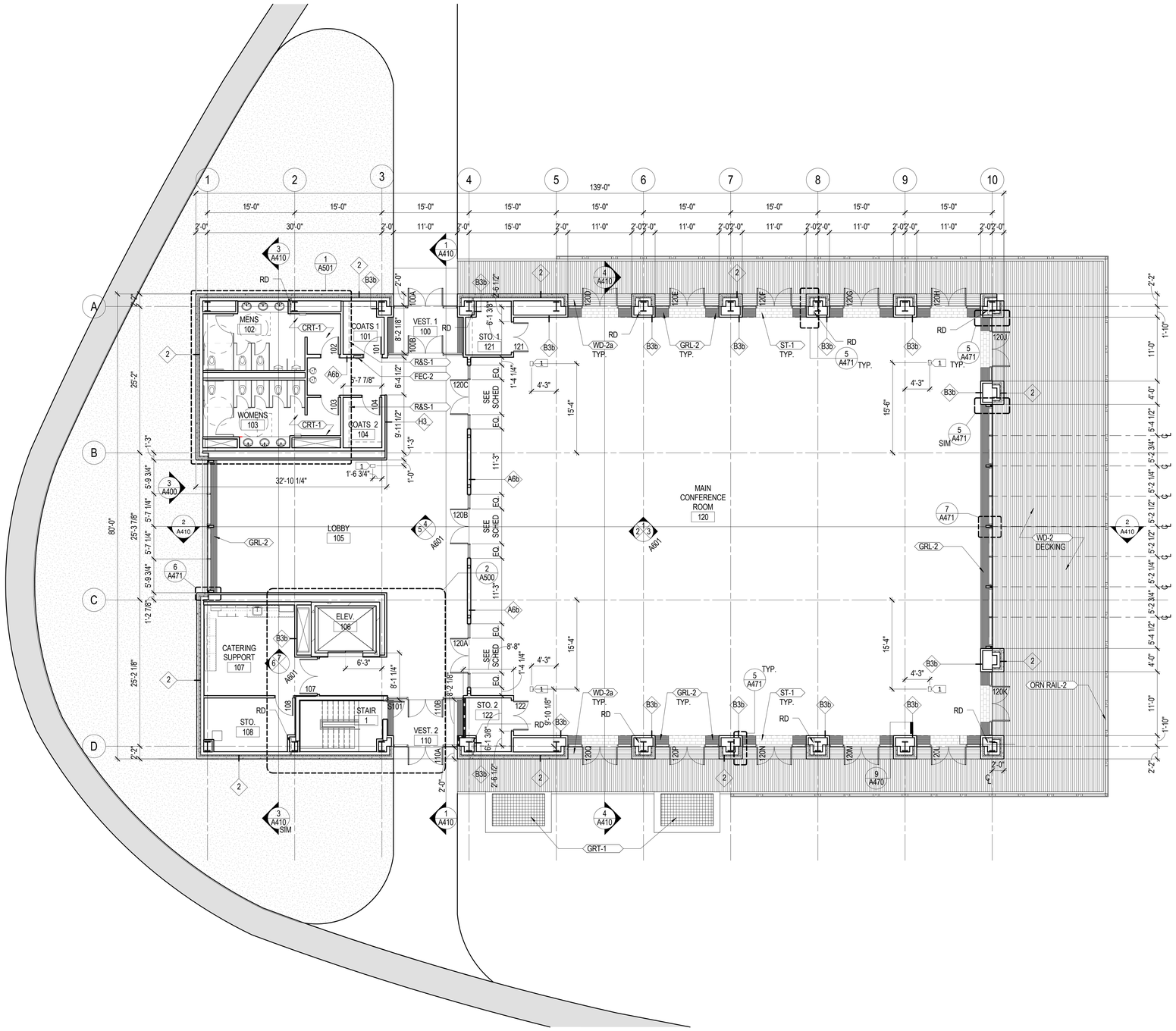

1 FLOOR PLAN - LEVEL 01
1/8" = 1'-0"

GENERAL NOTES - CONSTRUCTION PLAN

A. ALL INTERIOR PARTITIONS SHALL BE **"A3b"** UNLESS NOTED OTHERWISE.
B. PLAN DIMENSIONS ARE FROM FACE OF FINISH WHERE "HOLD" OR "CLEAR" ARE INDICATED. ALL OTHER PLAN DIMENSIONS ARE FROM FACE OF PARTITION TYPE AND DO NOT INCLUDE APPLIED FINISHES.
C. ENSURE FINISH SURFACES ARE FLUSH AND SEAMLESS WHERE PARTITIONS AND/OR FURRING ARE COPLANAR.
D. ALL PIPING, CONDUITS AND RELATED MECHANICAL AND ELECTRICAL ITEMS SHALL BE CONCEALED WITHIN PARTITION/WALL ASSEMBLY IN FINISHED AREAS UNLESS NOTED OTHERWISE.
E. PROVIDE BACKING/BLOCKING TO SUPPORT ALL WALL-MOUNTED ITEMS.
F. ALL MECHANICAL EQUIPMENT PADS TO BE 4" HIGH MINIMUM, UNLESS NOTED OTHERWISE. SIZE OF PADS TO BE VERIFIED BY CONTRACTOR

KEYNOTES - CONSTRUCTION PLAN

#	DESCRIPTION
1	FLOOR ACCESS PANEL FOR COMPANY SWITCH - SEE ELECTRICAL

HGA
333 East Erie Street
Milwaukee, Wisconsin 53202
Telephone 414.278.8200

ULINE
12575 Uline Drive
Pleasant Prairie, WI 53158

ULINE
SHIPPING SUPPLY SPECIALISTS

I HEREBY CERTIFY THAT THIS PLAN, SPECIFICATION OR REPORT WAS PREPARED BY ME OR UNDER MY DIRECT SUPERVISION AND THAT I AM A DULY LICENSED ARCHITECT UNDER THE LAWS OF THE STATE OF

NAME:
DATE: JULY 10, 2015
REGISTRATION NUMBER:

NO	DESCRIPTION	DATE
	CP-1	05/08/15
	CP-2	07/10/15

ISSUANCE HISTORY - THIS SHEET

HGA NO: 3595-001-00

LEVEL 1 FLOOR PLAN

DATE: May 8, 2015

CONSTRUCTION DOCUMENTS

A201

© COPYRIGHT HAMMEL, GREEN AND ABRAHAMSON, INC.

C:\Users\giroberd\Documents\Revit Local Files\3595001 00_UlineConferenceCenter_giroberd-PC7505.rvt
7/10/2015 9:27:33 AM

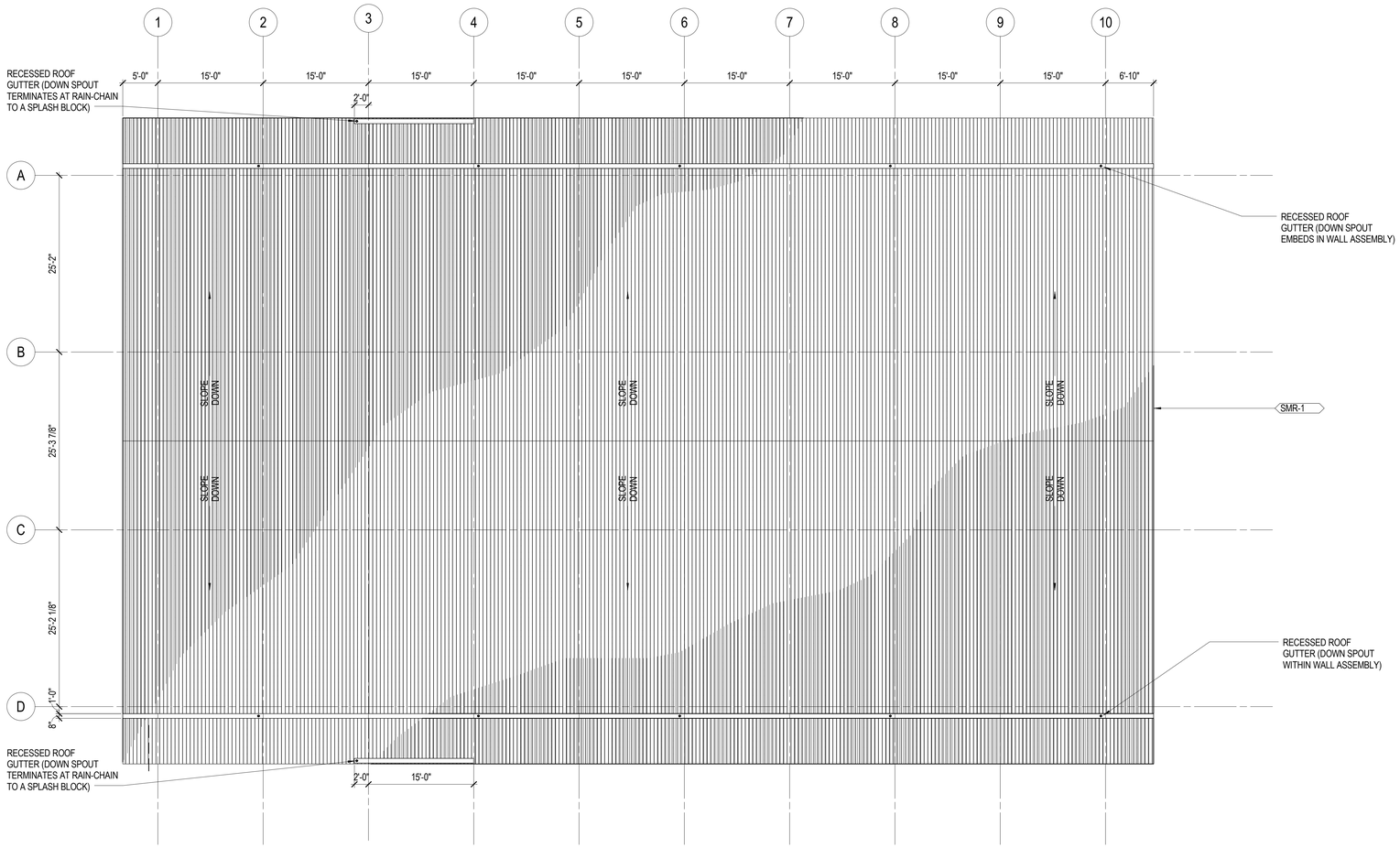

1 FLOOR PLAN - ROOF
1/8" = 1'-0"

HGA
333 East Erie Street
Milwaukee, Wisconsin 53202
Telephone 414.278.8200

ULINE
12575 Uline Drive
Pleasant Prairie, WI 53158

ULINE
SHIPPING SUPPLY SPECIALISTS

I HEREBY CERTIFY THAT THIS PLAN, SPECIFICATION OR REPORT WAS PREPARED BY ME OR UNDER MY DIRECT SUPERVISION AND THAT I AM A DULY LICENSED ARCHITECT UNDER THE LAWS OF THE STATE OF

NAME:
DATE: JULY 10, 2015
REGISTRATION NUMBER:

NO	DESCRIPTION	DATE
	CP-1	05/08/15
	CP-2	07/10/15

ISSUANCE HISTORY - THIS SHEET

HGA NO: 3595-001-00

ROOF PLAN

DATE: May 8, 2015

CONSTRUCTION DOCUMENTS

A202

© COPYRIGHT HAMMEL, GREEN AND ABRAHAMSON, INC.

7/10/2015 9:27:37 AM C:\Users\jgroberd\Documents\Revit Local Files\3595001 00_UlineConferenceCenter_jgroberd-PC7505.rvt

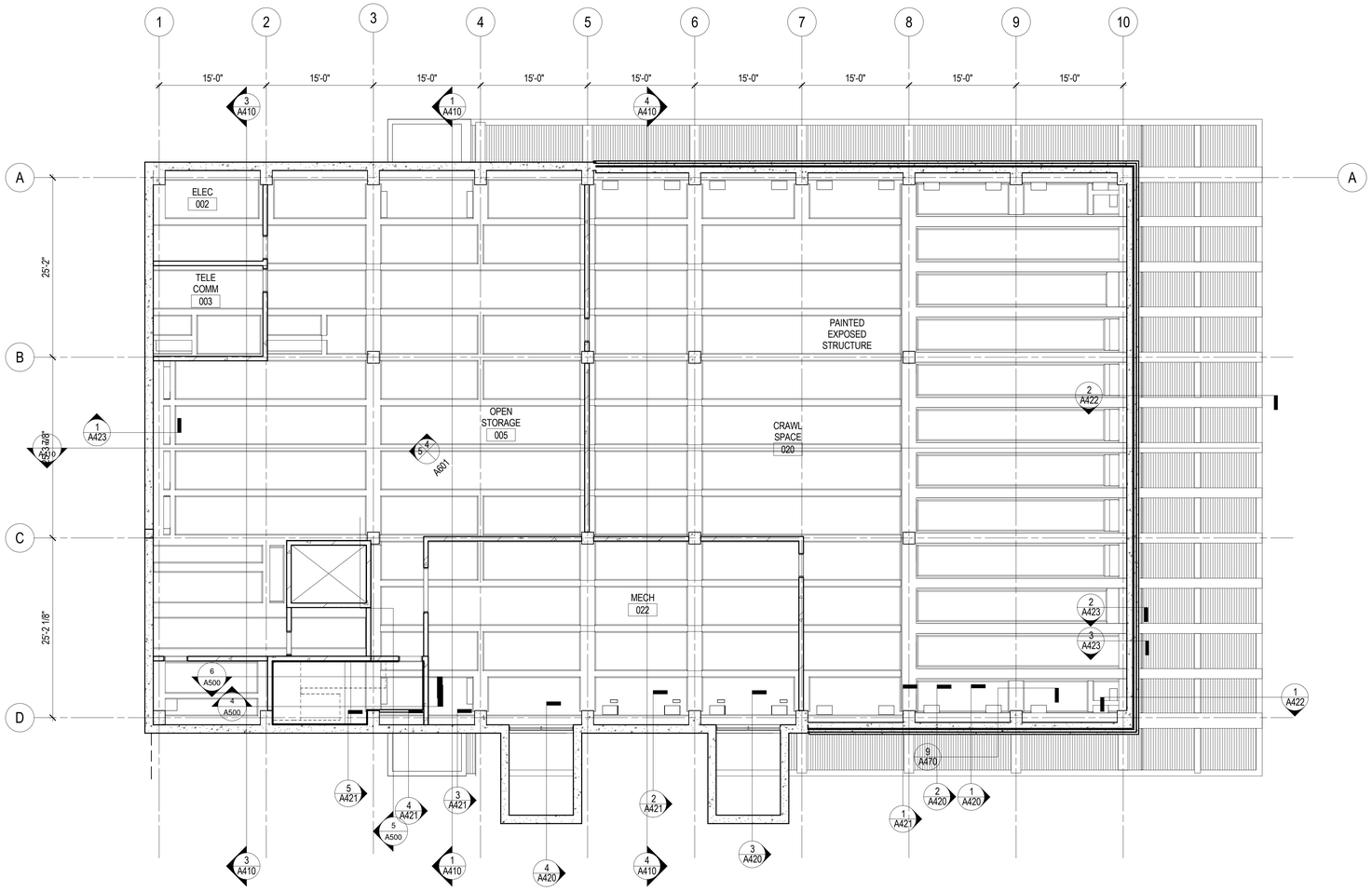

1 REFLECTED CEILING PLAN - LOWER LEVEL
1/8" = 1'-0"

HGA
333 East Erie Street
Milwaukee, Wisconsin 53202
Telephone 414.278.8200

ULINE
12575 Uline Drive
Pleasant Prairie, WI 53158

ULINE
SHIPPING SUPPLY SPECIALISTS

I HEREBY CERTIFY THAT THIS PLAN, SPECIFICATION OR REPORT WAS PREPARED BY ME OR UNDER MY DIRECT SUPERVISION AND THAT I AM A DULY LICENSED ARCHITECT UNDER THE LAWS OF THE STATE OF

NAME:
DATE: JULY 10, 2015
REGISTRATION NUMBER:

NO	DESCRIPTION	DATE
	CP-1	05/08/15
	CP-2	07/10/15

ISSUANCE HISTORY - THIS SHEET

HGA NO: 3595-001-00

LOWER LEVEL RCP

DATE: May 8, 2015

CONSTRUCTION DOCUMENTS

A300

© COPYRIGHT HAMMEL, GREEN AND ABRAHAMSON, INC.

7/10/2015 9:27:40 AM C:\Users\giroberd\Documents\Revit Local Files\3595001-00_UlineConferenceCenter_giroberd-PC7505.rvt

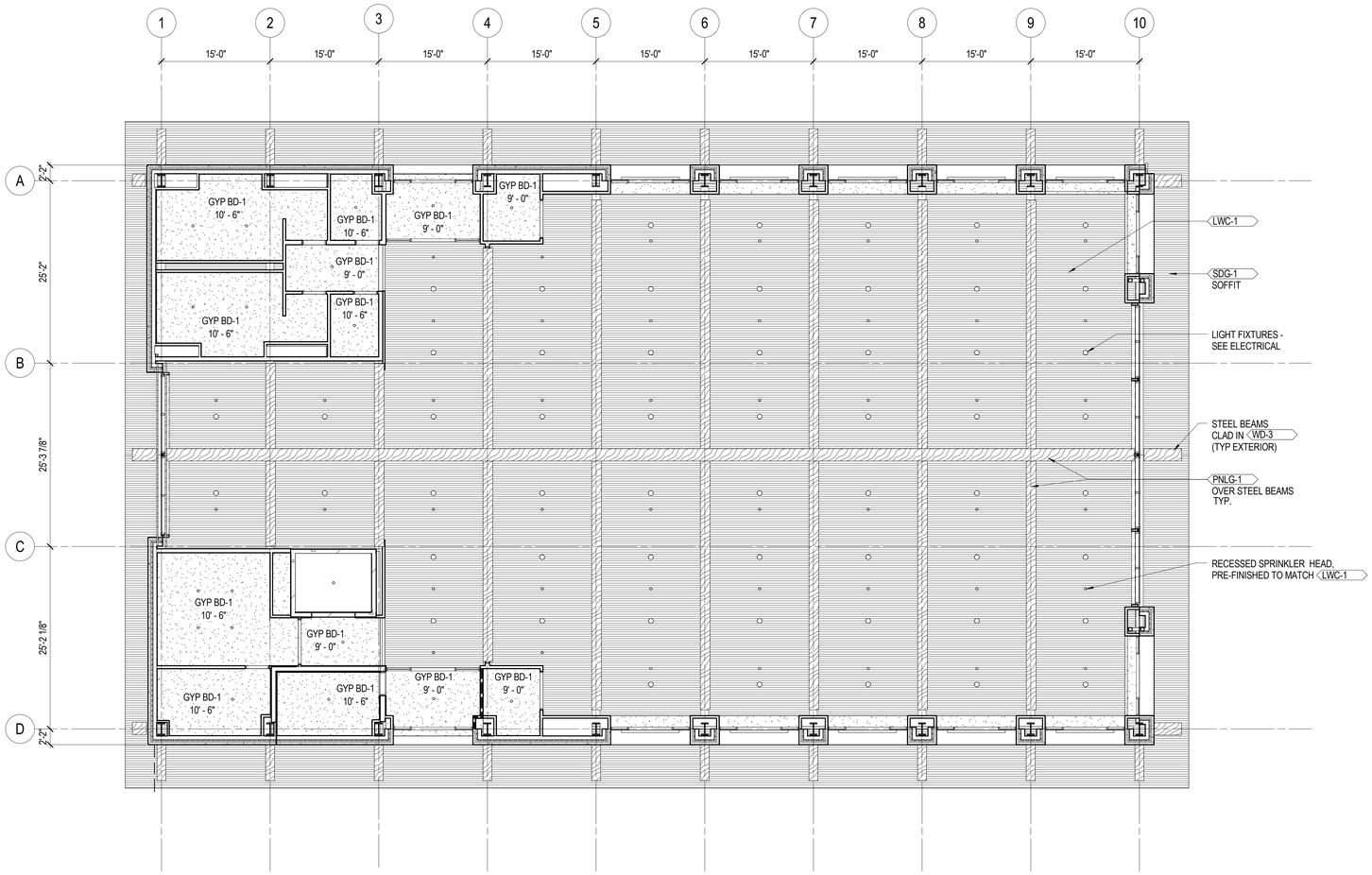

1 REFLECTED CEILING PLAN - LEVEL 01
1/8" = 1'-0"

HGA
333 East Erie Street
Milwaukee, Wisconsin 53202
Telephone 414.278.8200

ULINE
12575 Uline Drive
Pleasant Prairie, WI 53158

ULINE
SHIPPING SUPPLY SPECIALISTS

I HEREBY CERTIFY THAT THIS PLAN, SPECIFICATION OR REPORT WAS PREPARED BY ME OR UNDER MY DIRECT SUPERVISION AND THAT I AM A DULY LICENSED ARCHITECT UNDER THE LAWS OF THE STATE OF

NAME:
DATE: JULY 10, 2015
REGISTRATION NUMBER:

NO	DESCRIPTION	DATE
	CP-1	05/08/15
	CP-2	07/10/15

ISSUANCE HISTORY - THIS SHEET

HGA NO: 3595-001-00

LEVEL 1 RCP

DATE: May 8, 2015

CONSTRUCTION DOCUMENTS

A301

© COPYRIGHT HAMMEL, GREEN AND ABRAHAMSON, INC.

7/10/2015 9:27:44 AM C:\Users\jgroberd\Documents\Revit Local Files\359500100_UlineConferenceCenter_groberd-PC7505.rvt

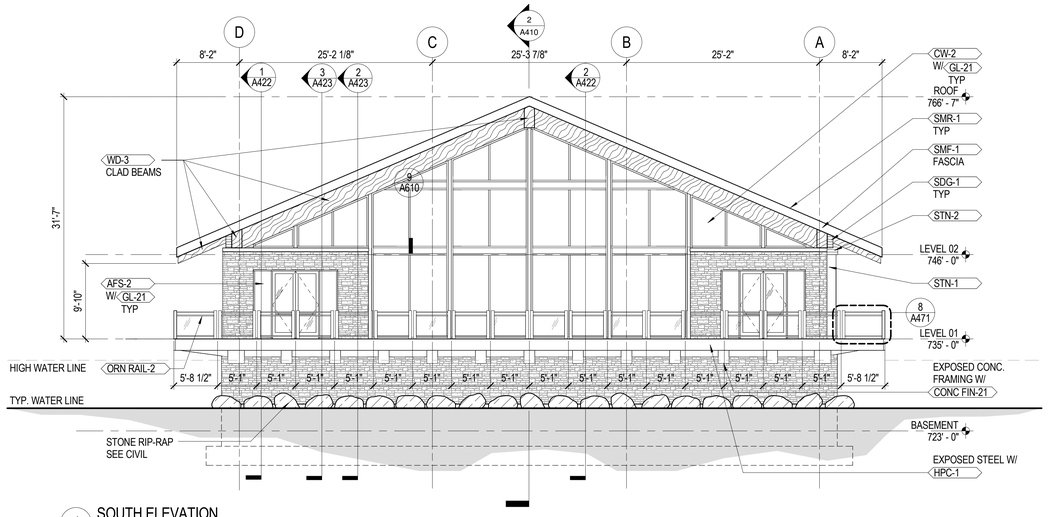

4 SOUTH ELEVATION
1/8" = 1'-0"

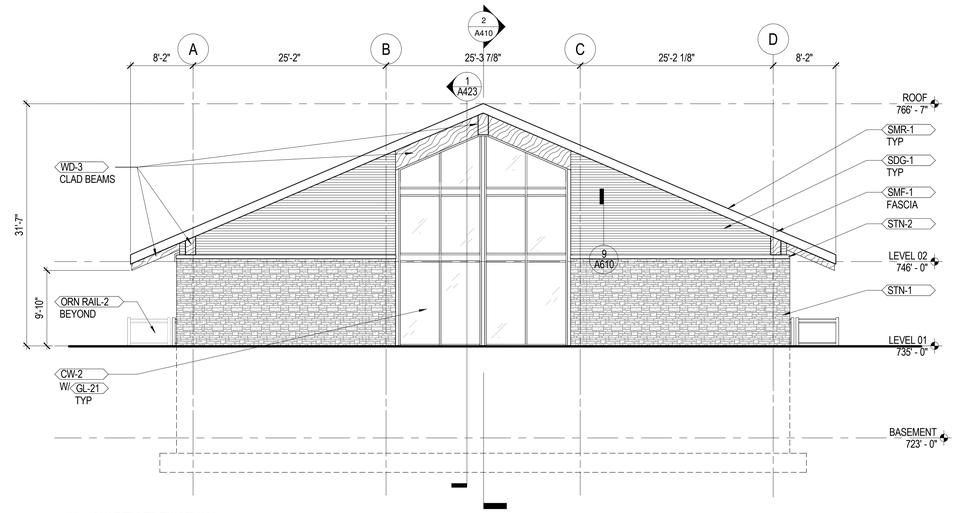

3 NORTH ELEVATION
1/8" = 1'-0"

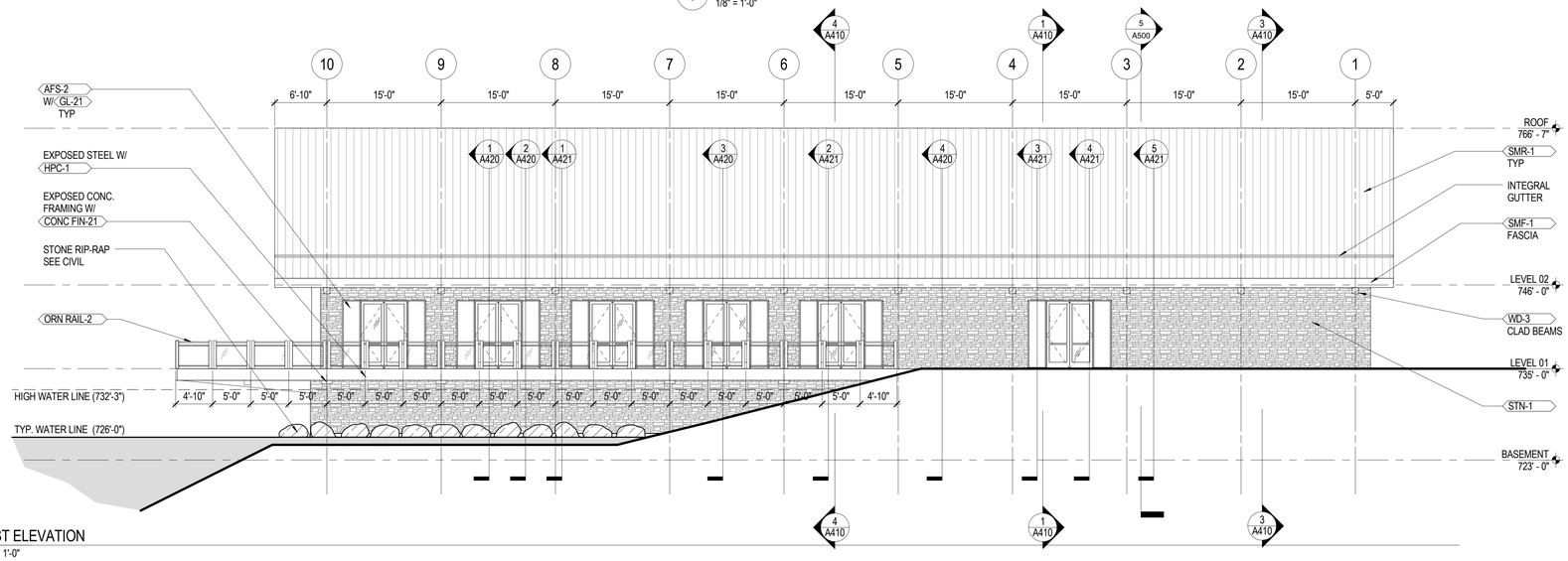

2 EAST ELEVATION
1/8" = 1'-0"

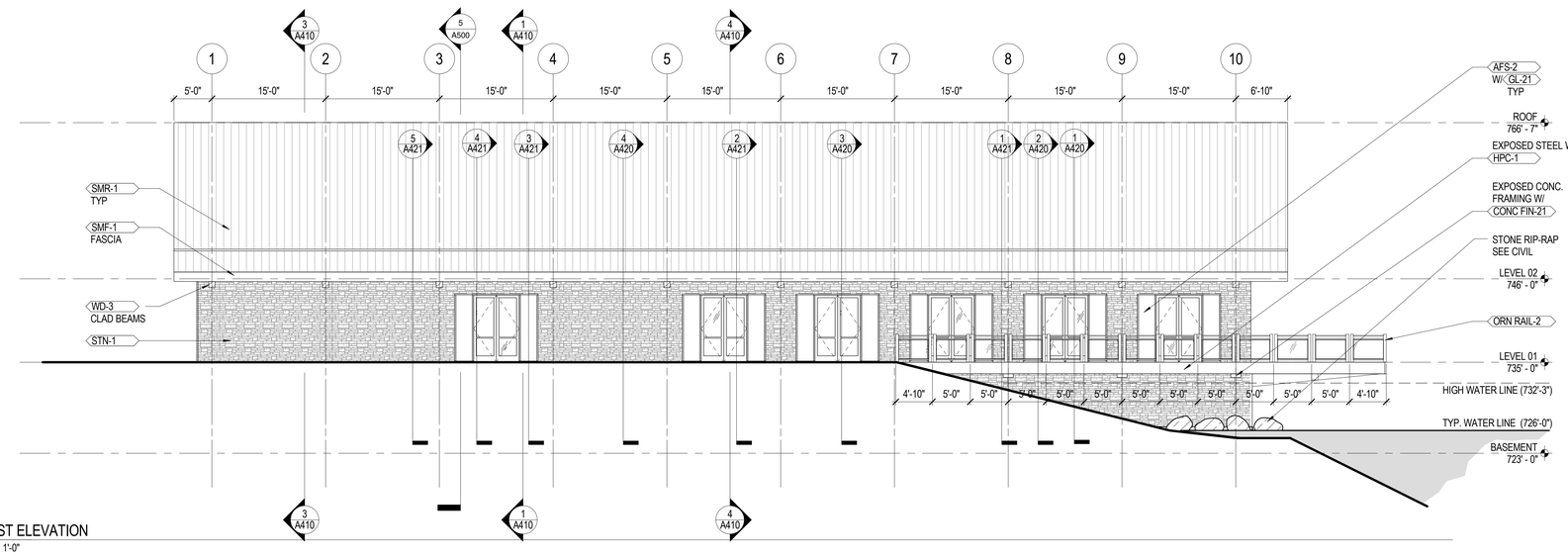

1 WEST ELEVATION
1/8" = 1'-0"

HGA
333 East Erie Street
Milwaukee, Wisconsin 53202
Telephone 414.278.8200

ULINE
12575 Uline Drive
Pleasant Prairie, WI 53158

ULINE
SHIPPING SUPPLY SPECIALISTS

I HEREBY CERTIFY THAT THIS PLAN, SPECIFICATION OR REPORT WAS PREPARED BY ME OR UNDER MY DIRECT SUPERVISION AND THAT I AM A DULY LICENSED ARCHITECT UNDER THE LAWS OF THE STATE OF

NAME:
DATE: JULY 10, 2015
REGISTRATION NUMBER:

NO	DESCRIPTION	DATE
	CP-1	05/08/15
	CP-2	07/10/15

ISSUANCE HISTORY - THIS SHEET

HGA NO: 3595-001-00

EXTERIOR ELEVATIONS

DATE: May 8, 2015

CONSTRUCTION DOCUMENTS

A400

© COPYRIGHT HAMMEL, GREEN AND ABRAHAMSON, INC.

7/10/2015 9:27:56 AM C:\Users\gtroberts\Documents\Revit Local Files\359500100_UlineConferenceCenter_gtroberts-PC7505.rvt

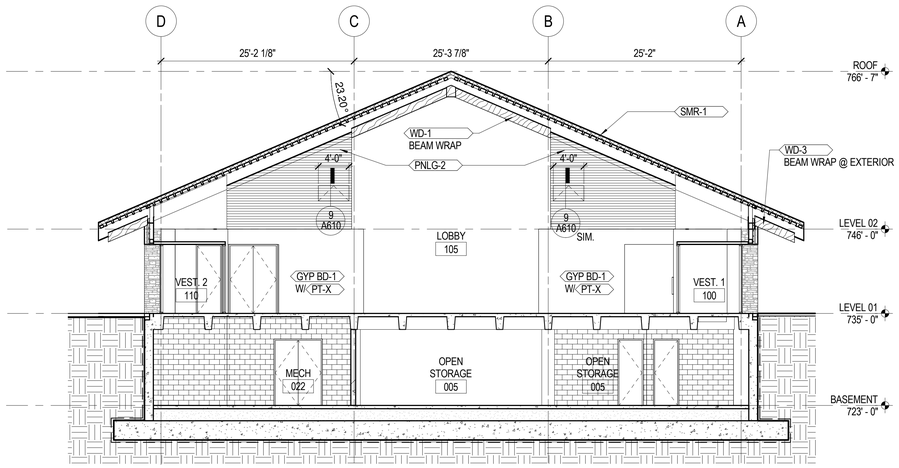

1 NORTH CROSS SECTION A
1/8" = 1'-0"

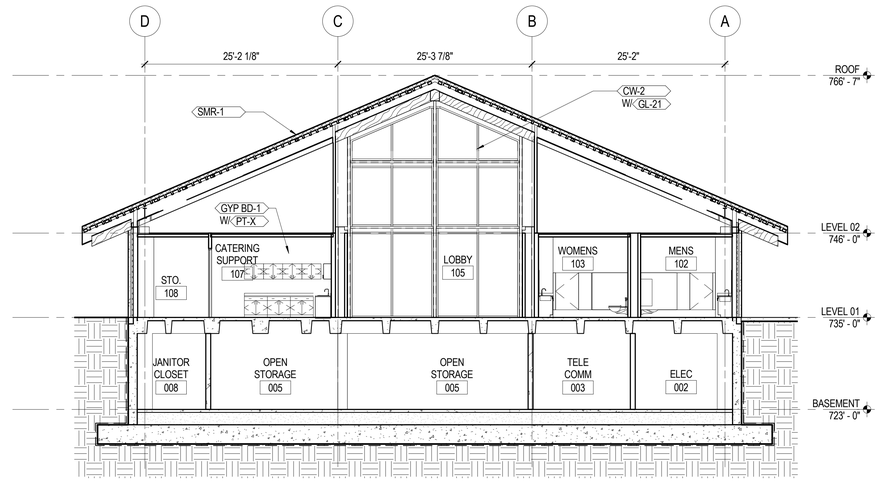

3 NORTH CROSS SECTION B
1/8" = 1'-0"

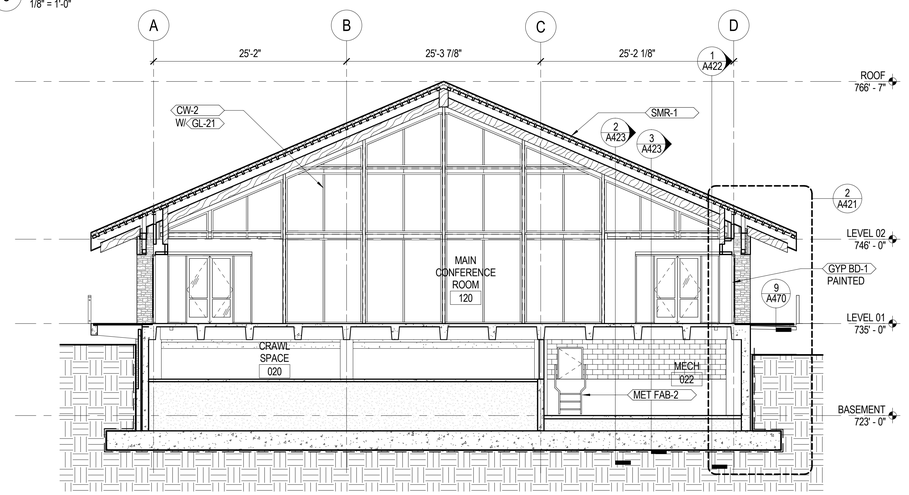

4 SOUTH CROSS SECTION
1/8" = 1'-0"

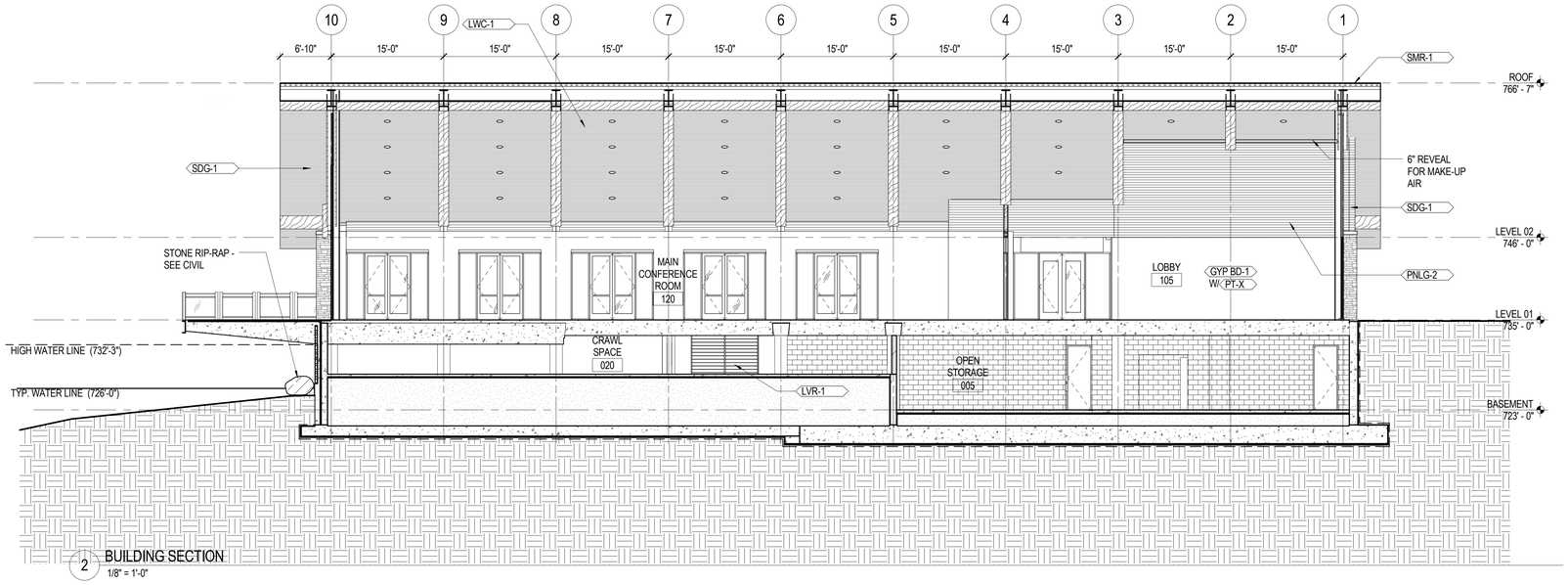

2 BUILDING SECTION
1/8" = 1'-0"

HGA
333 East Erie Street
Milwaukee, Wisconsin 53202
Telephone 414.278.8200

ULINE
12575 Uline Drive
Pleasant Prairie, WI 53158

ULINE
SHIPPING SUPPLY SPECIALISTS

I HEREBY CERTIFY THAT THIS PLAN, SPECIFICATION OR REPORT WAS PREPARED BY ME OR UNDER MY DIRECT SUPERVISION AND THAT I AM A DULY LICENSED ARCHITECT UNDER THE LAWS OF THE STATE OF

NAME:
DATE: JULY 10, 2015
REGISTRATION NUMBER:

NO	DESCRIPTION	DATE
	CP-1	05/08/15
	CP-2	07/10/15

ISSUANCE HISTORY - THIS SHEET

HGA NO: 3595-001-00

BUILDING SECTIONS

DATE: May 8, 2015

CONSTRUCTION DOCUMENTS

A410

© COPYRIGHT HAMMEL, GREEN AND ABRAHAMSON, INC.

C:\Users\gtrobertd\Documents\Revit Local Files\359500100_UlineConferenceCenter_gtrobertd-PC7505.rvt
7/10/2015 9:28:06 AM

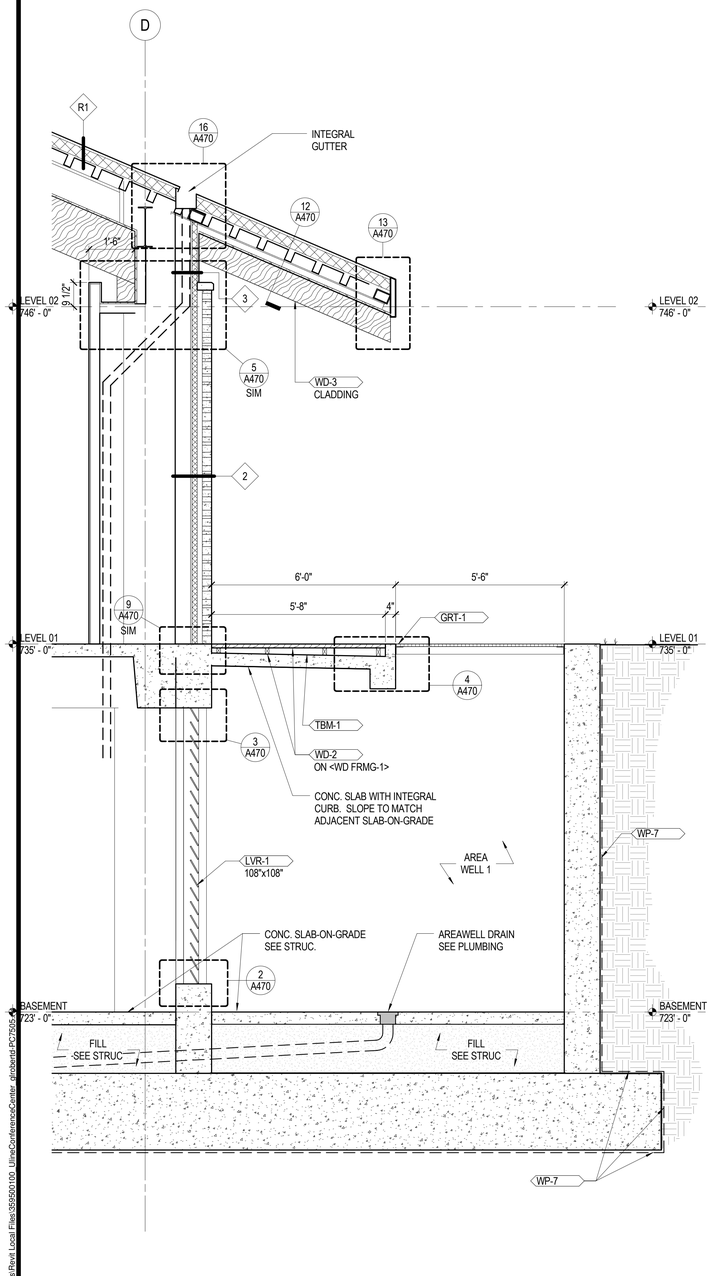

4 EXT WALL SECTION @ AREA WELL 1
1/2" = 1'-0"

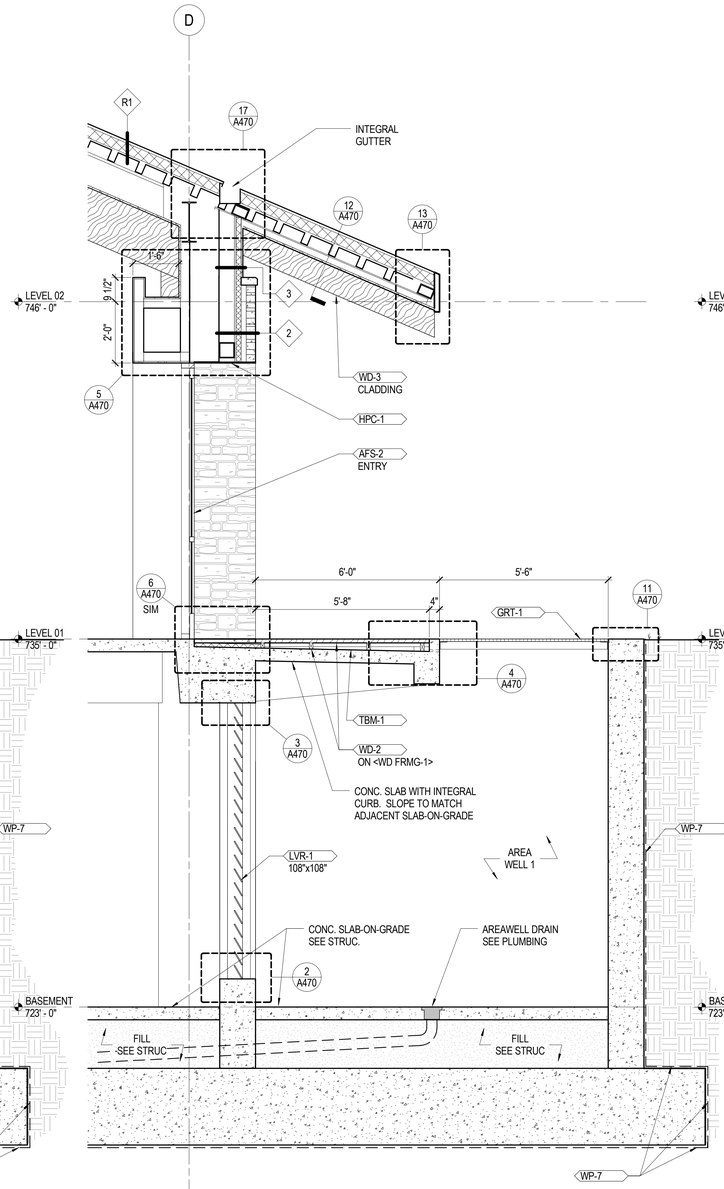

3 EXT WALL SECTION @ AREA WELL 2
1/2" = 1'-0"

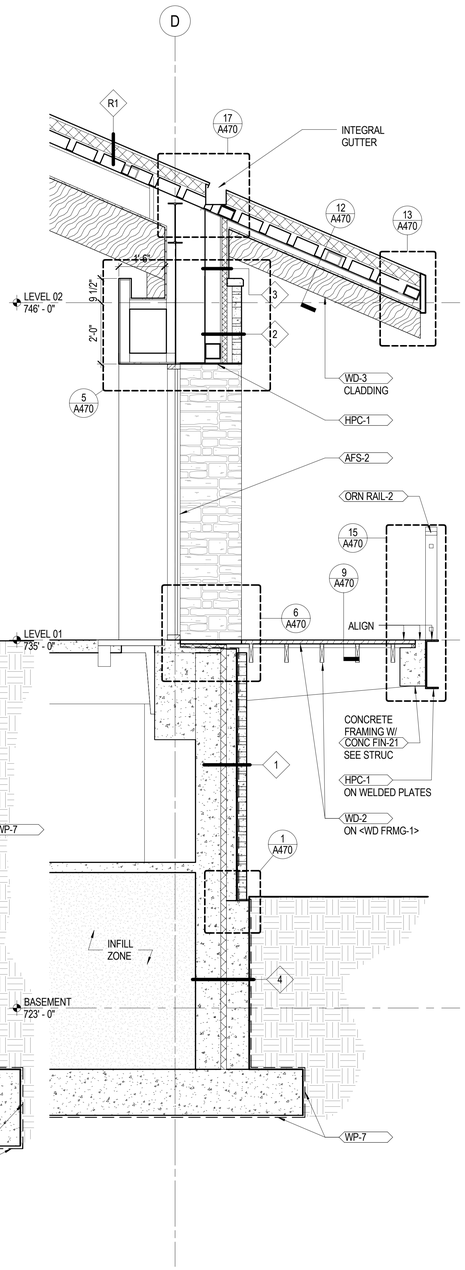

2 (TYP) WALL SECTION @ GLASS WINDOW
1/2" = 1'-0"

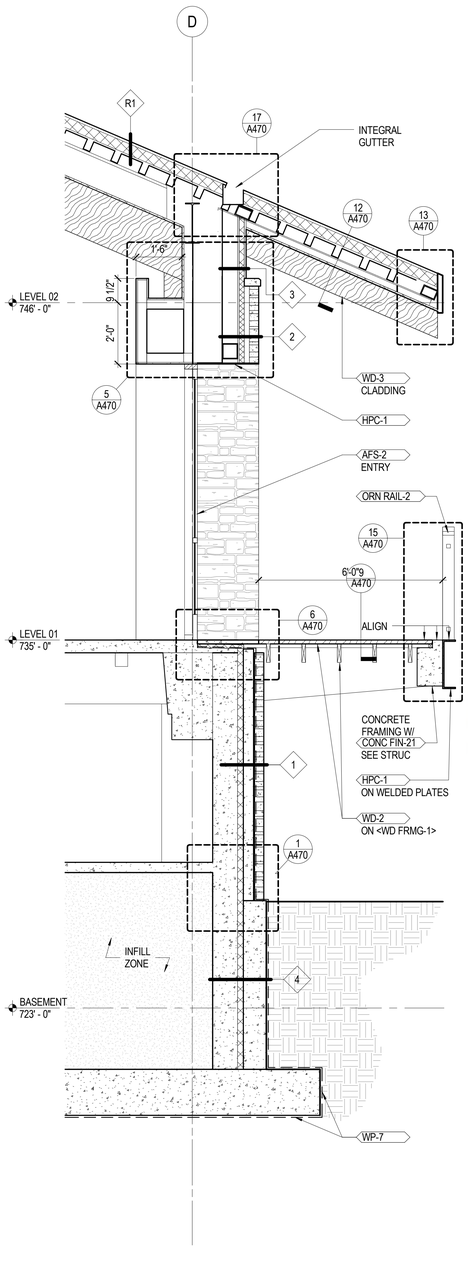

1 (TYP) WALL SECTION @ GLASS DOOR
1/2" = 1'-0"

HGA
333 East Erie Street
Milwaukee, Wisconsin 53202
Telephone 414.278.8200

ULINE
12575 Uline Drive
Pleasant Prairie, WI 53158

ULINE
SHIPPING SUPPLY SPECIALISTS

I HEREBY CERTIFY THAT THIS PLAN, SPECIFICATION OR REPORT WAS PREPARED BY ME OR UNDER MY DIRECT SUPERVISION AND THAT I AM A DULY LICENSED ARCHITECT UNDER THE LAWS OF THE STATE OF

NAME:
DATE: JULY 10, 2015
REGISTRATION NUMBER:

NO	DESCRIPTION	DATE
	CP-1	05/08/15
	CP-2	07/10/15

ISSUANCE HISTORY - THIS SHEET

HGA NO: 3595-001-00

WALL SECTIONS

DATE: May 8, 2015

CONSTRUCTION DOCUMENTS

A420

© COPYRIGHT HAMMEL, GREEN AND ABRAHAMSON, INC.

C:\Users\jgroberd\Documents\Revit Local Files\3595001-00_UlineConferenceCenter_grobertd-PC7505.rvt
7/10/2015 9:28:11 AM

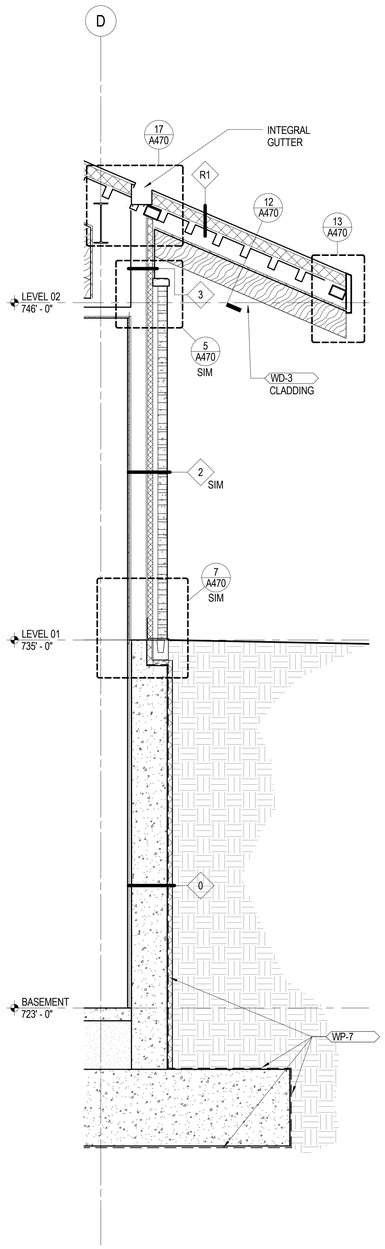

5 EXT WALL SECTION @ STAIR
1/2" = 1'-0"

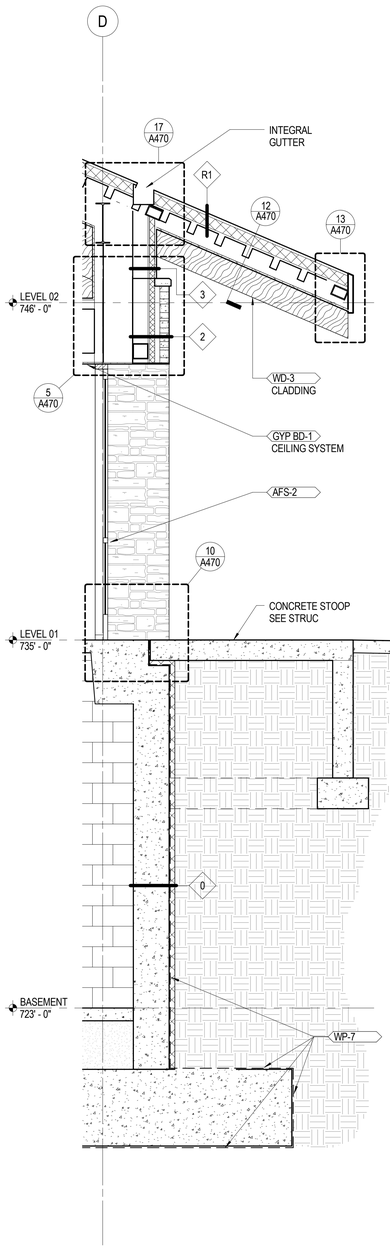

4 WALL SECTION @ VESTIBULE DOOR
1/2" = 1'-0"

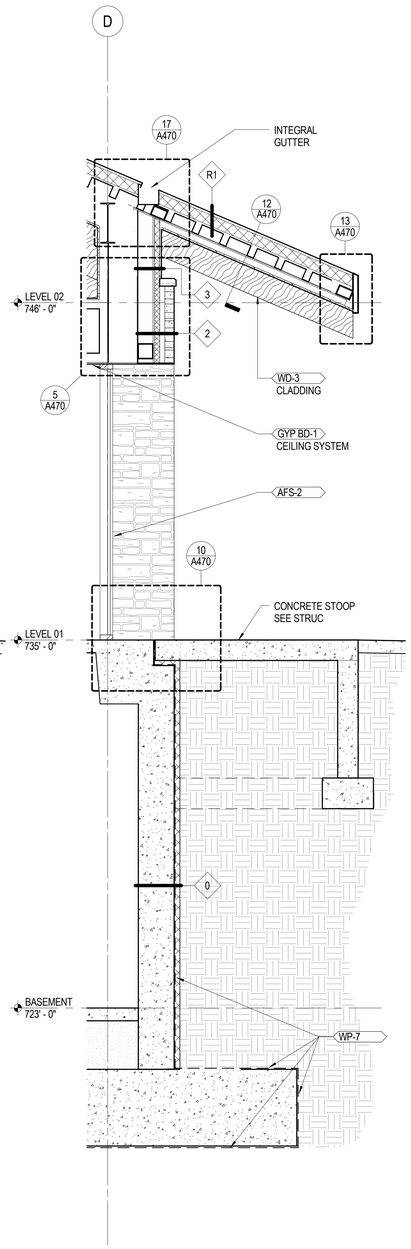

3 WALL SECTION @ VESTIBULE WINDOW
1/2" = 1'-0"

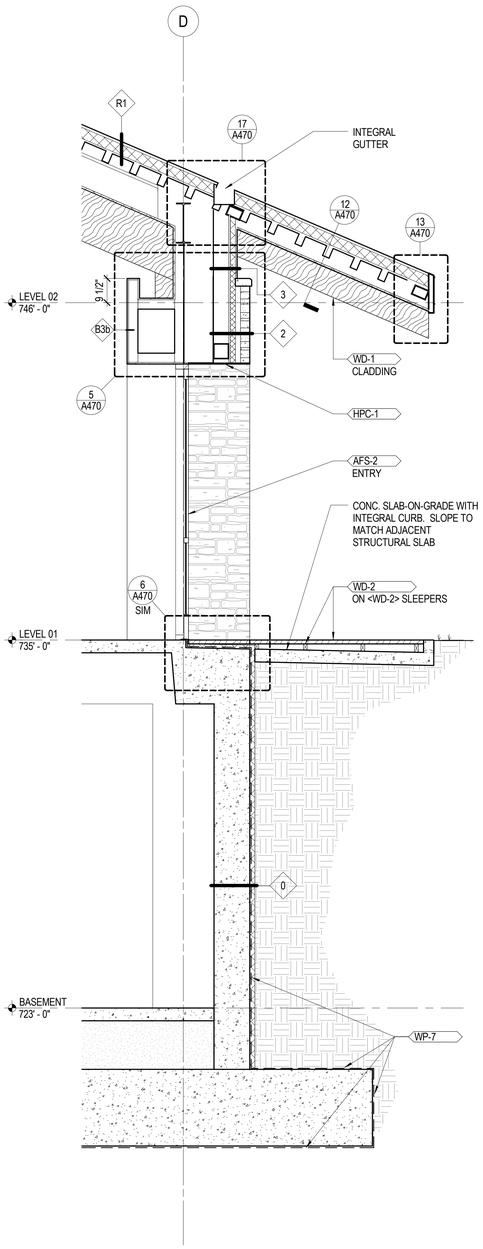

2 (TYP) WALL SECTION @ GLASS DOOR (HIGH GRADE)
1/2" = 1'-0"

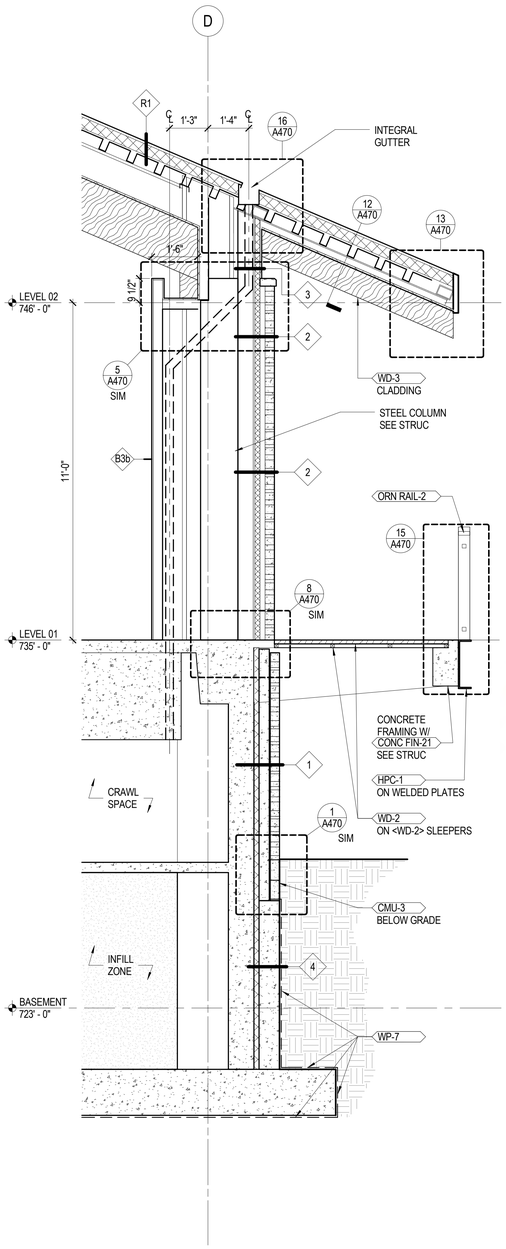

1 (TYP) WALL SECTION @ COLUMN PIER
1/2" = 1'-0"

HGA
333 East Erie Street
Milwaukee, Wisconsin 53202
Telephone 414.278.8200

ULINE
12575 Uline Drive
Pleasant Prairie, WI 53158

ULINE
SHIPPING SUPPLY SPECIALISTS

I HEREBY CERTIFY THAT THIS PLAN, SPECIFICATION OR REPORT WAS PREPARED BY ME OR UNDER MY DIRECT SUPERVISION AND THAT I AM A DULY LICENSED ARCHITECT UNDER THE LAWS OF THE STATE OF

NAME:
DATE: JULY 10, 2015
REGISTRATION NUMBER:

NO	DESCRIPTION	DATE
	CP-1	05/08/15
	CP-2	07/10/15

ISSUANCE HISTORY - THIS SHEET

HGA NO: 3595-001-00

WALL SECTIONS

DATE: May 8, 2015

CONSTRUCTION DOCUMENTS

A421

© COPYRIGHT HAMMEL, GREEN AND ABRAHAMSON, INC.

C:\Users\jgroberd\Documents\Revit Local Files\359500100_UlineConferenceCenter_groberd-PC7505.rvt
7/10/2015 9:28:16 AM

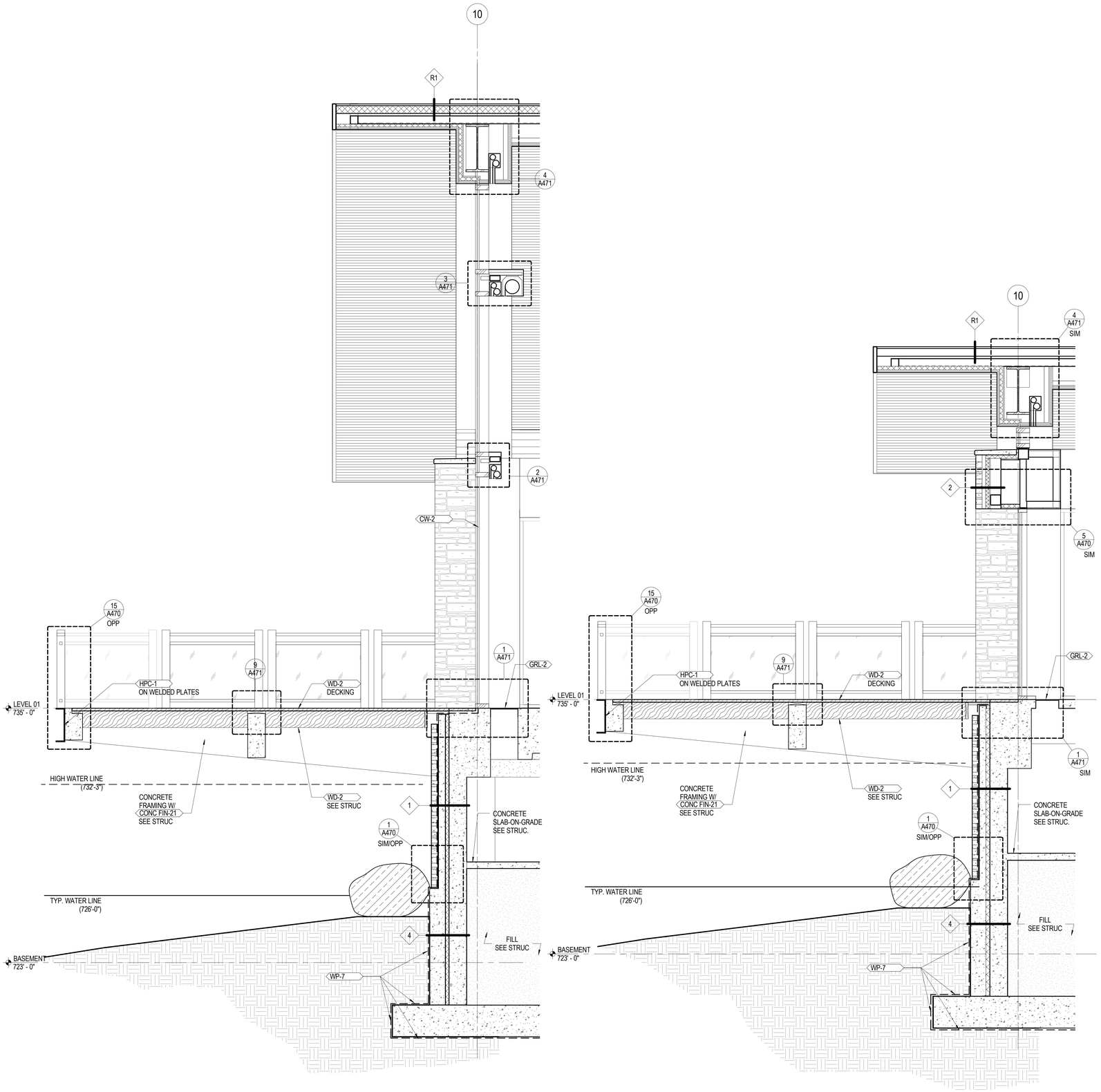

2 WALL SECTION @ SOUTH CURTAIL WALL (TYP)
1/2" = 1'-0"

1 EXT WALL SECTION @ SOUTH STONE/ WOOD SIDING WALL
1/2" = 1'-0"

HGA
333 East Erie Street
Milwaukee, Wisconsin 53202
Telephone 414.278.8200

ULINE
12575 Uline Drive
Pleasant Prairie, WI 53158

ULINE
SHIPPING SUPPLY SPECIALISTS

I HEREBY CERTIFY THAT THIS PLAN, SPECIFICATION OR REPORT WAS PREPARED BY ME OR UNDER MY DIRECT SUPERVISION AND THAT I AM A DULY LICENSED ARCHITECT UNDER THE LAWS OF THE STATE OF

NAME:
DATE: JULY 10, 2015
REGISTRATION NUMBER:

NO	DESCRIPTION	DATE
	CP-1	05/08/15
	CP-2	07/10/15

ISSUANCE HISTORY - THIS SHEET

HGA NO: 3595-001-00

WALL SECTIONS

DATE: May 8, 2015

CONSTRUCTION DOCUMENTS

A422

© COPYRIGHT HAMMEL, GREEN AND ABRAHAMSON, INC.

7/10/2015 9:28:20 AM C:\Users\gtroberts\Documents\Revit Local Files\359500100_UlineConferenceCenter_gtroberts-PC7505.rvt

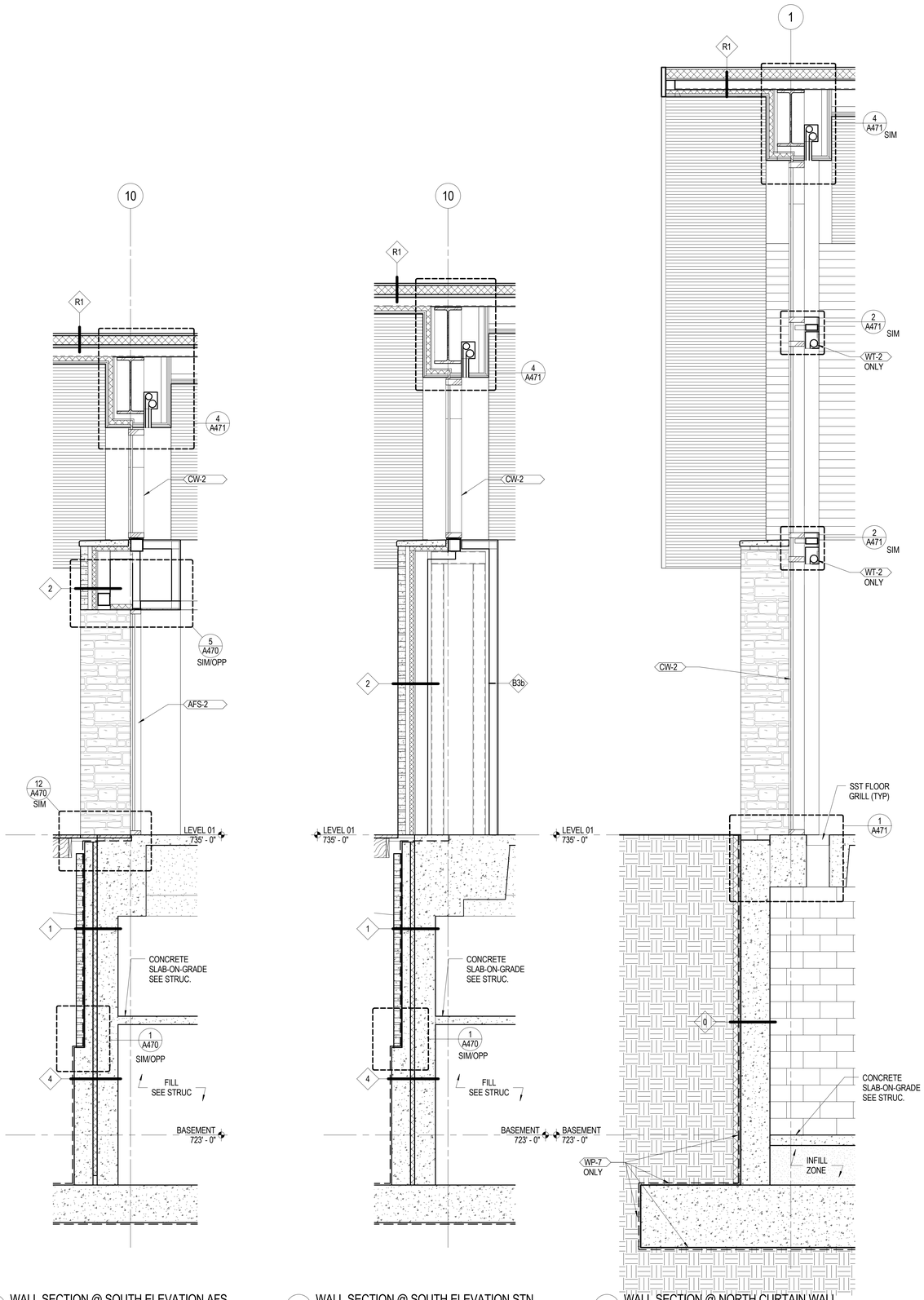

3 WALL SECTION @ SOUTH ELEVATION AFS
1/2" = 1'-0"

2 WALL SECTION @ SOUTH ELEVATION STN
1/2" = 1'-0"

1 WALL SECTION @ NORTH CURTAIN WALL
1/2" = 1'-0"

HGA
333 East Erie Street
Milwaukee, Wisconsin 53202
Telephone 414.278.8200

ULINE
12575 Uline Drive
Pleasant Prairie, WI 53158

ULINE
SHIPPING SUPPLY SPECIALISTS

I HEREBY CERTIFY THAT THIS PLAN, SPECIFICATION OR REPORT WAS PREPARED BY ME OR UNDER MY DIRECT SUPERVISION AND THAT I AM A DULY LICENSED ARCHITECT UNDER THE LAWS OF THE STATE OF

NAME:
DATE: JULY 10, 2015
REGISTRATION NUMBER:

NO	DESCRIPTION	DATE
	CP-2	07/10/15

ISSUANCE HISTORY - THIS SHEET

HGA NO: 3595-001-00

WALL SECTIONS

DATE: May 8, 2015

CONSTRUCTION DOCUMENTS

A423

© COPYRIGHT HAMMEL, GREEN AND ABRAHAMSON, INC.

7/10/2015 9:28:23 AM C:\Users\gtrobertd\Documents\Revit Local Files\359500100_UlineConferenceCenter_gtrobertd-PC7505.rvt

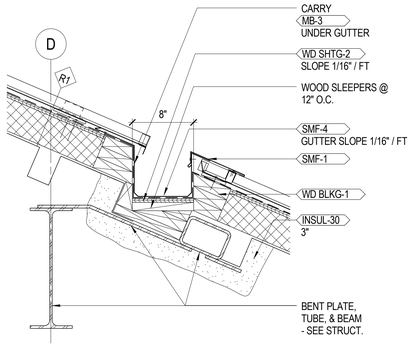

17 TYPICAL INTERNAL GUTTER DETAIL
1 1/2" = 1'-0"

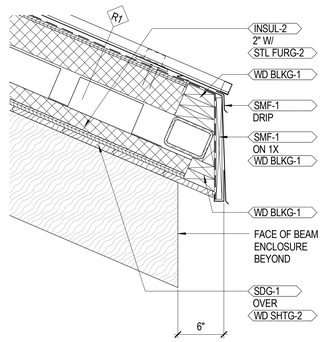

13 TYPICAL SLOPED ROOF EDGE
1 1/2" = 1'-0"

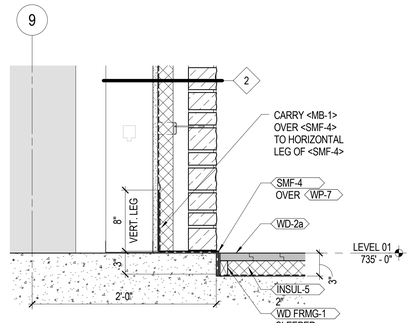

9 TYPICAL STONE BASE SIDE WALL DETAIL @ RECESS W/ DECK
1 1/2" = 1'-0"

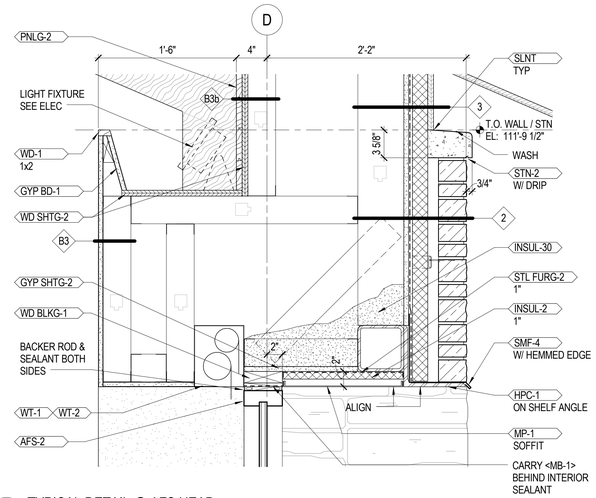

5 TYPICAL DETAIL @ AFS HEAD
1 1/2" = 1'-0"

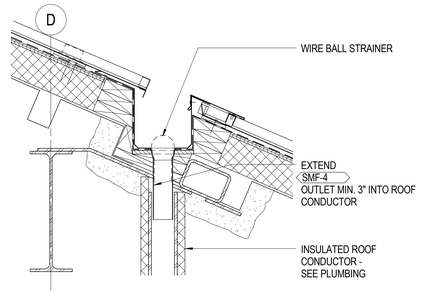

16 TYPICAL DETAIL @ GUTTER INTERNAL DOWNSPOUT
1 1/2" = 1'-0"

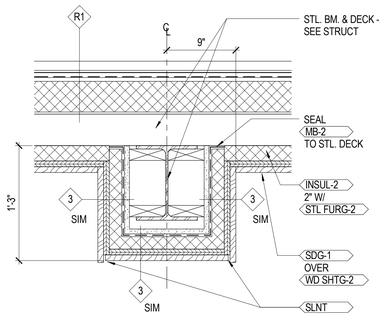

12 ROOF OVERHANG CROSS-SECTION
1 1/2" = 1'-0"

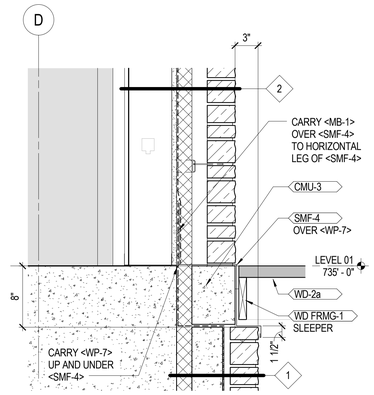

8 TYPICAL STONE PIER @ WD DECK
1 1/2" = 1'-0"

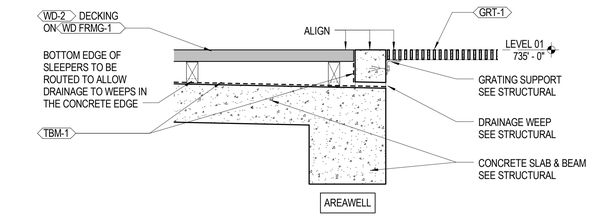

4 DETAIL @ DECK / AREAWELL BEAM
1 1/2" = 1'-0"

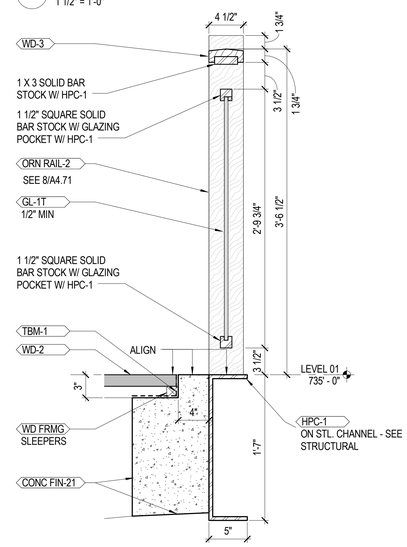

15 TYPICAL DECK RAILING DETAIL
1 1/2" = 1'-0"

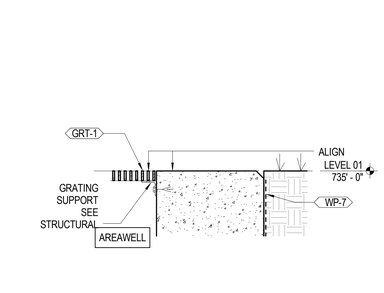

11 DETAIL @ AREAWELL GRATING / GRADE
1 1/2" = 1'-0"

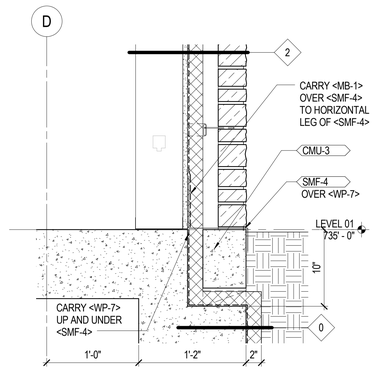

7 TYPICAL STONE BASE DETAIL @ GRADE
1 1/2" = 1'-0"

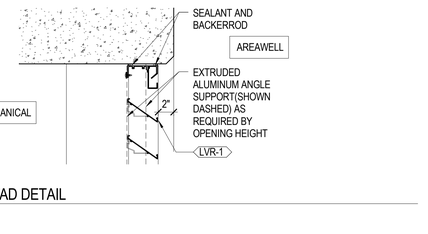

3 TYPICAL LOUVER HEAD DETAIL
1 1/2" = 1'-0"

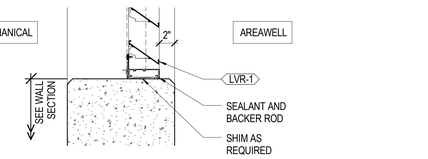

2 TYPICAL LOUVER SILL DETAIL
1 1/2" = 1'-0"

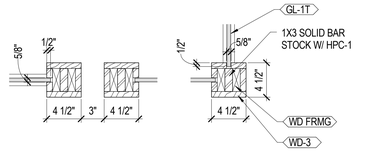

14 TYP DECK PLAN DETAIL
1 1/2" = 1'-0"

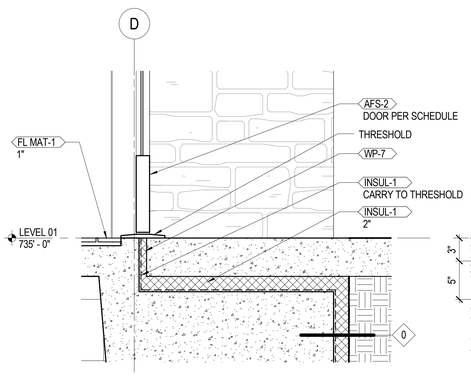

10 TYPICAL DETAIL @ CONC. STOOP
1 1/2" = 1'-0"

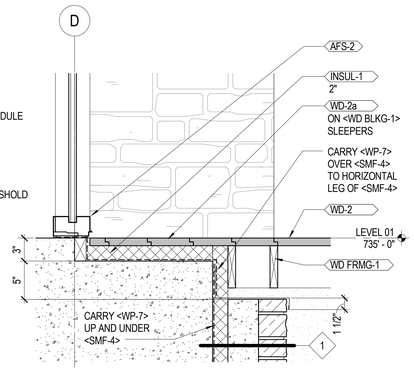

6 TYPICAL DETAIL @ AFS RECESS
1 1/2" = 1'-0"

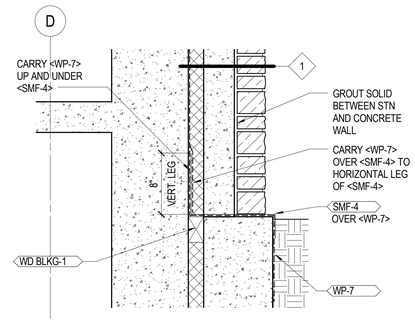

1 TYPICAL STONE BASE @ CONC. LEDGE
1 1/2" = 1'-0"

hga.
333 East Erie Street
Milwaukee, Wisconsin 53202
Telephone 414.278.8200

ULINE
12575 Uline Drive
Pleasant Prairie, WI 53158

ULINE
SHIPPING SUPPLY SPECIALISTS

I HEREBY CERTIFY THAT THIS PLAN, SPECIFICATION OR REPORT WAS PREPARED BY ME OR UNDER MY DIRECT SUPERVISION AND THAT I AM A DULY LICENSED ARCHITECT UNDER THE LAWS OF THE STATE OF

NAME:
DATE: JULY 10, 2015
REGISTRATION NUMBER:

NO	DESCRIPTION	DATE
	CP-2	07/10/15

ISSUANCE HISTORY - THIS SHEET

HGA NO: 3595-001-00

EXTERIOR DETAILS

DATE: May 8, 2015

CONSTRUCTION DOCUMENTS

A470

© COPYRIGHT HAMMEL, GREEN AND ABRAHAMSON, INC.

7/10/2015 9:39:23 AM C:\Users\jhoband\Documents\Revit Local Files\3595900100_UlineConferenceCenter_jhoband_R2015.rvt

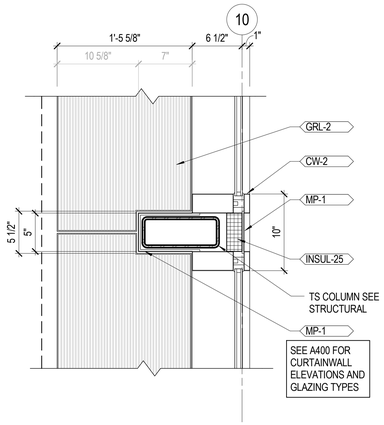

7 PLAN DETAIL AT MAJOR VERTICAL MULLION
1 1/2" = 1'-0"

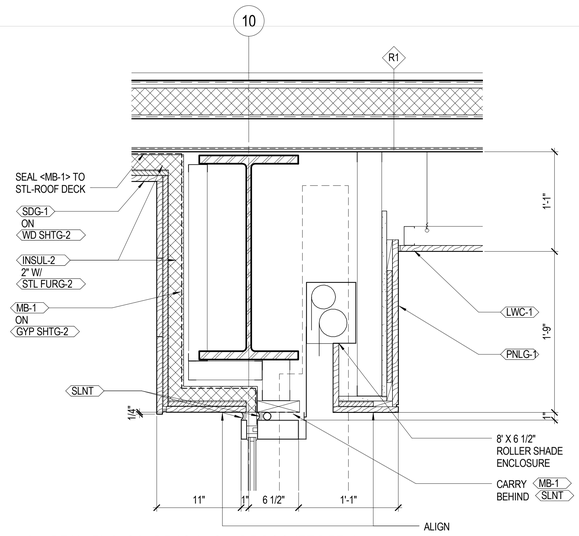

4 BEAM ENCLOSURE / SUN SHADE POCKET DETAIL
1 1/2" = 1'-0"

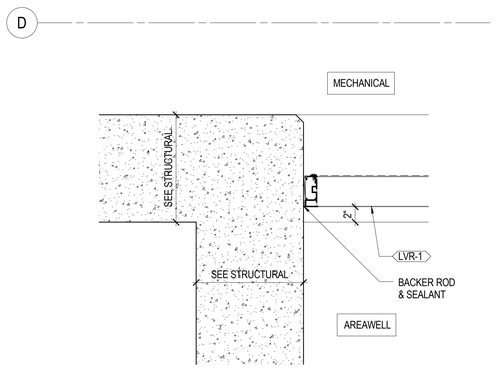

10 TYPICAL LOUVER JAMB DETAIL
1 1/2" = 1'-0"

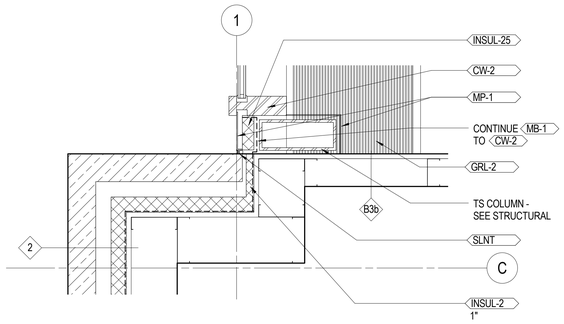

6 JAMB DETAIL @ CURTAINWALL
1 1/2" = 1'-0"

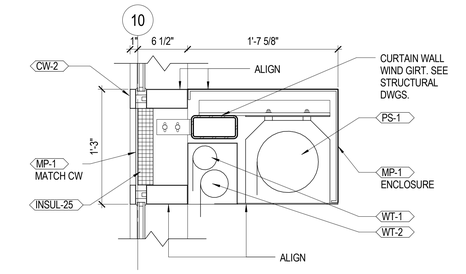

3 CURTAINWALL WIND GIRT / PROJECTION SCREEN DETAIL
1 1/2" = 1'-0"

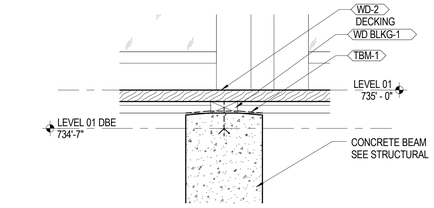

9 DECK SUPPORT @ CONCRETE BEAM DETAIL
1 1/2" = 1'-0"

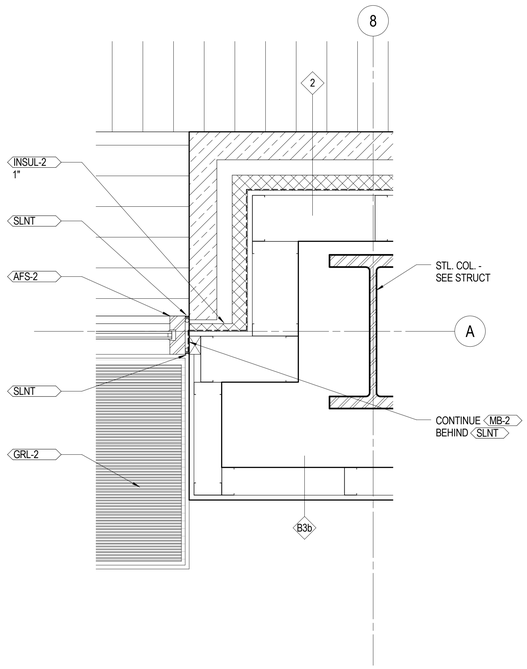

5 JAMB DETAIL @ AFS-2
1 1/2" = 1'-0"

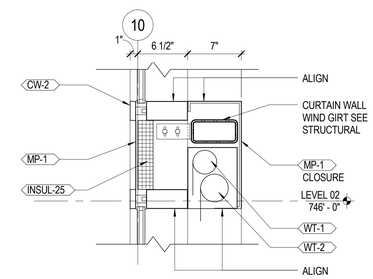

2 CURTAINWALL WINDW GIRD / SUN SHADE POCKET DETAIL
1 1/2" = 1'-0"

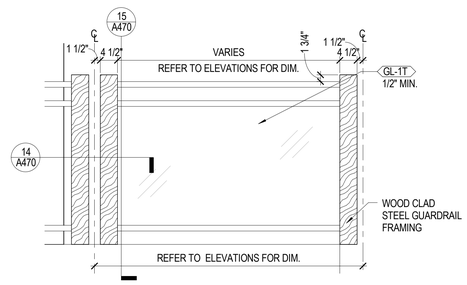

8 ORN RAIL-2
3/4" = 1'-0"

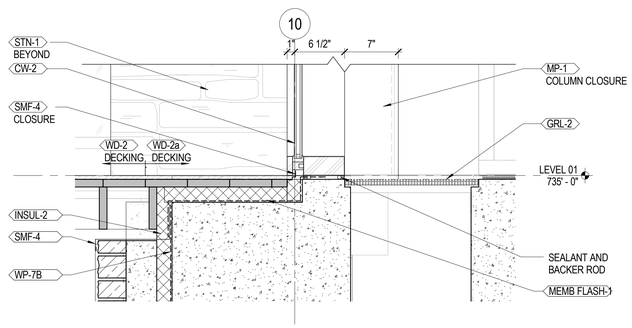

1 CURTAINWALL BASE DETAIL
1 1/2" = 1'-0"

333 East Erie Street
Milwaukee, Wisconsin 53202
Telephone 414.278.8200

ULINE
12575 Uline Drive
Pleasant Prairie, WI 53158

ULINE
SHIPPING SUPPLY SPECIALISTS

I HEREBY CERTIFY THAT THIS PLAN, SPECIFICATION OR REPORT WAS PREPARED BY ME OR UNDER MY DIRECT SUPERVISION AND THAT I AM A DULY LICENSED ARCHITECT UNDER THE LAWS OF THE STATE OF

NAME:
DATE: JULY 10, 2015
REGISTRATION NUMBER:

NO	DESCRIPTION	DATE
	CP-2	07/10/15

ISSUANCE HISTORY - THIS SHEET

HGA NO: 3595-001-00

EXTERIOR DETAILS

DATE: May 8, 2015

CONSTRUCTION DOCUMENTS

A471

© COPYRIGHT HAMMEL, GREEN AND ABRAHAMSON, INC.

7/10/2015 10:05:22 AM C:\Users\rjablonski\Documents\Revit Local Files\3595001D_UlineDistributionCenter_rjablonski.RCP505.rvt

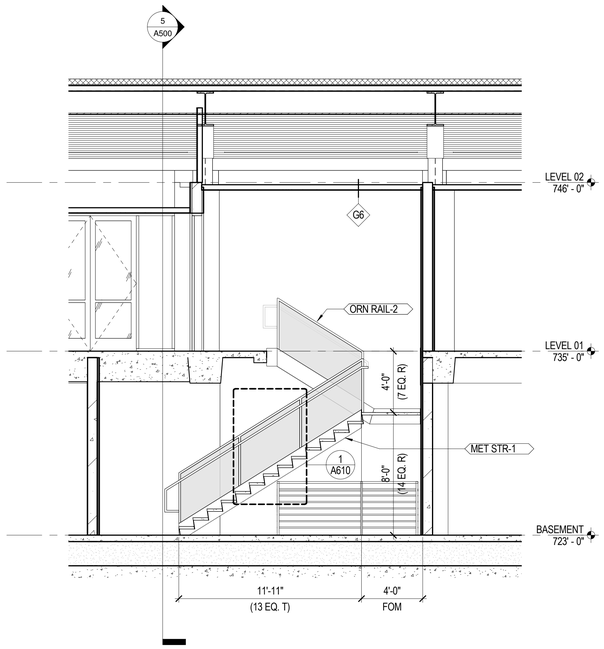

6 ENLARGED STAIR SECTION (WEST)
1/4" = 1'-0"

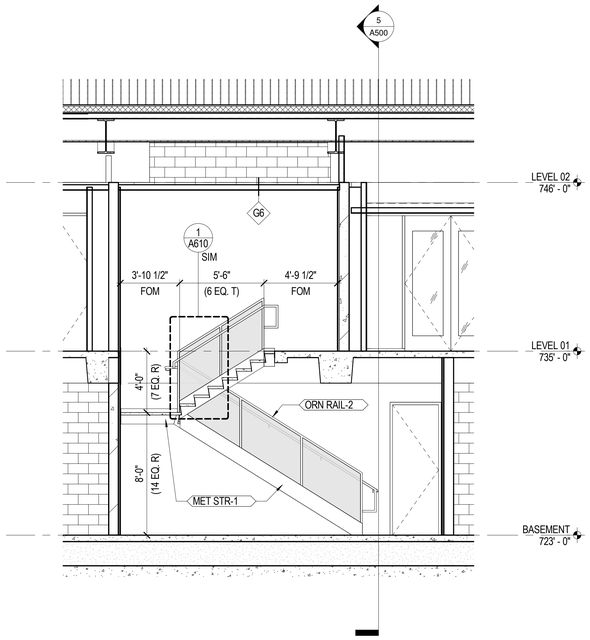

4 ENLARGED STAIR SECTION (EAST)
1/4" = 1'-0"

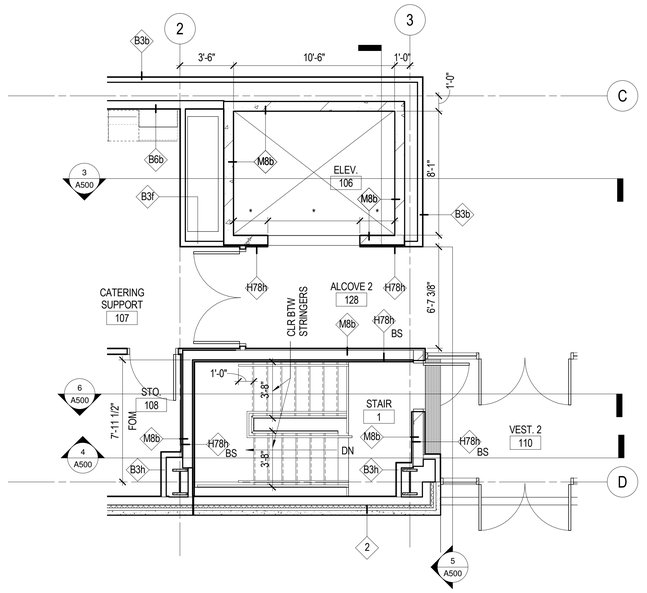

* COORDINATE DIMENSIONS W/
ELEV. MANUFACTURER

2 LEVEL 01 ENLARGED STAIR & ELEVATOR PLAN
1/4" = 1'-0"

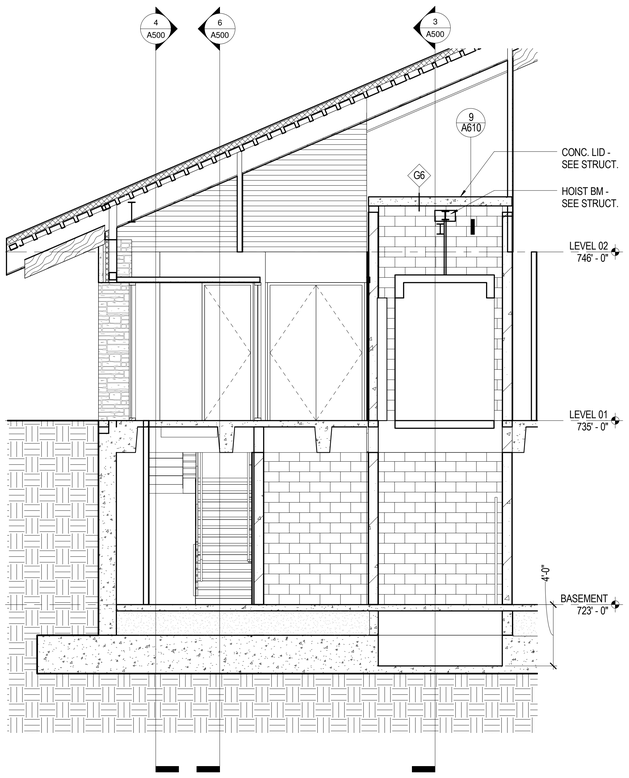

5 ENLARGED STAIR & ELEVATOR SECTION (NORTH)
1/4" = 1'-0"

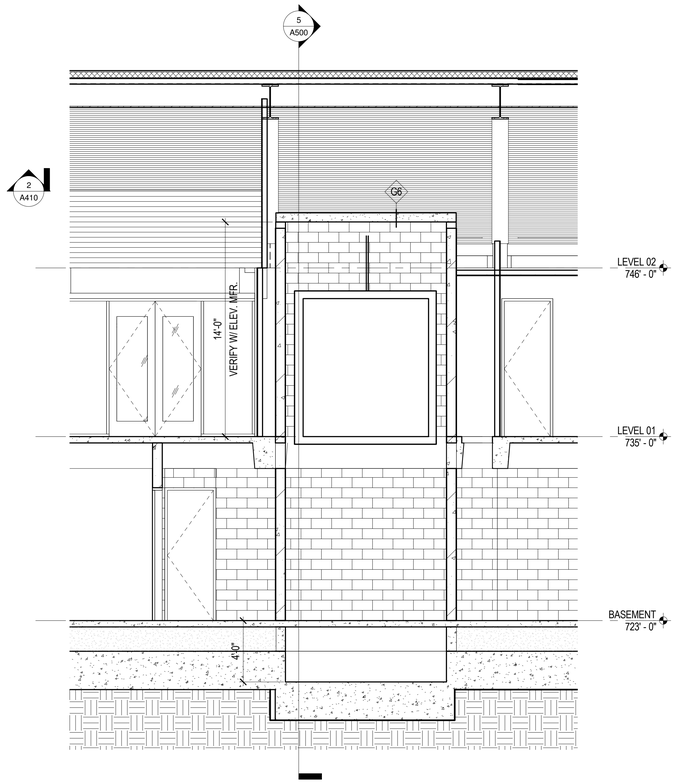

3 ENLARGED ELEVATOR SECTION (WEST)
1/4" = 1'-0"

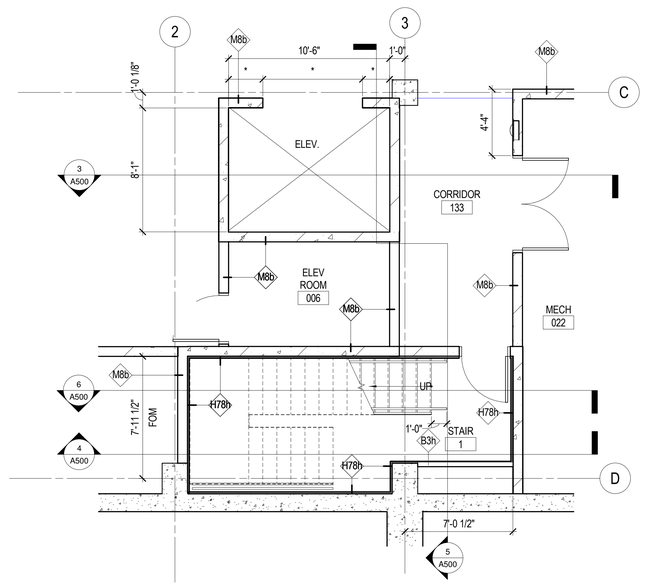

* COORDINATE DIMENSIONS W/
ELEV. MANUFACTURER

1 BASEMENT ENLARGED STAIR & ELEVATOR PLAN
1/4" = 1'-0"

HGA
333 East Erie Street
Milwaukee, Wisconsin 53202
Telephone 414.278.8200

ULINE
12575 Uline Drive
Pleasant Prairie, WI 53158

ULINE
SHIPPING SUPPLY SPECIALISTS

I HEREBY CERTIFY THAT THIS PLAN, SPECIFICATION OR REPORT WAS PREPARED BY ME OR UNDER MY DIRECT SUPERVISION AND THAT I AM A DULY LICENSED ARCHITECT UNDER THE LAWS OF THE STATE OF

NAME:
DATE: JULY 10, 2015
REGISTRATION NUMBER:

NO	DESCRIPTION	DATE
	CP-1	05/08/15
	CP-2	07/10/15

ISSUANCE HISTORY - THIS SHEET

HGA NO: 3595-001-00

ENLARGED STAIR AND ELEVATOR PLANS & SECTIONS

DATE: May 8, 2015

CONSTRUCTION DOCUMENTS

A500

© COPYRIGHT HAMMEL, GREEN AND ABRAHAMSON, INC.

C:\Users\gtroberts\Documents\Revit Local Files\359500100_UlineConferenceCenter_gtroberts-PC7505.rvt
7/10/2015 9:28:42 AM

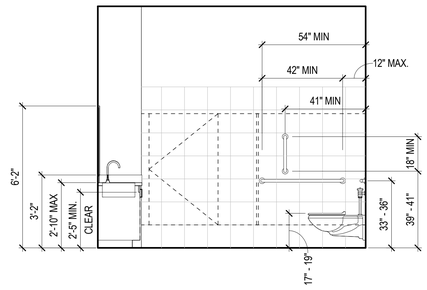

7 NORTH WOMENS
3/8" = 1'-0"

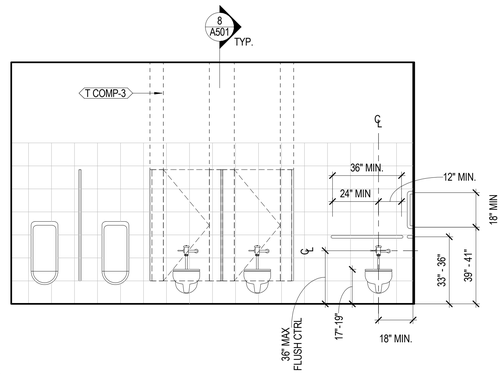

3 WEST MENS
3/8" = 1'-0"

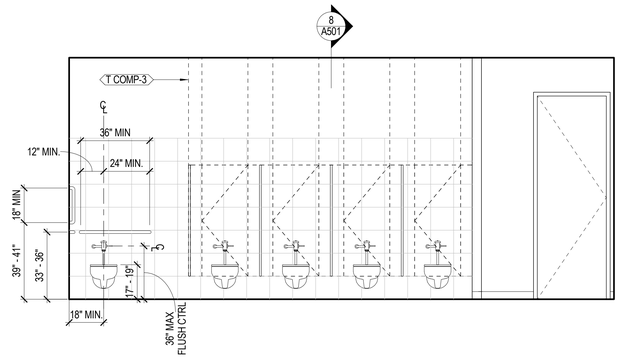

6 EAST WOMENS
3/8" = 1'-0"

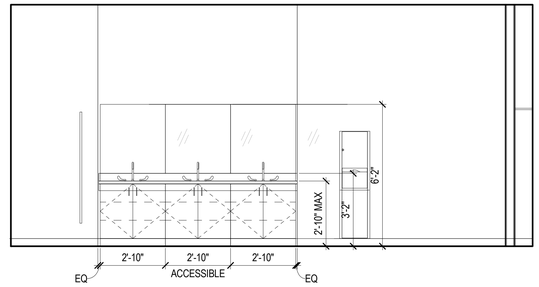

2 EAST MENS
3/8" = 1'-0"

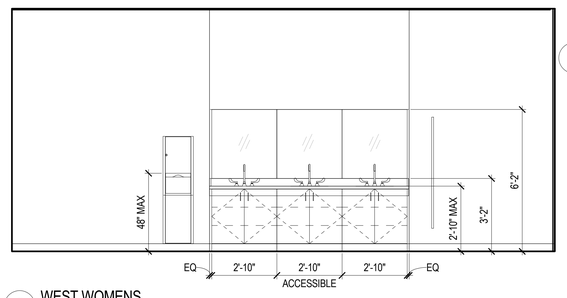

5 WEST WOMENS
3/8" = 1'-0"

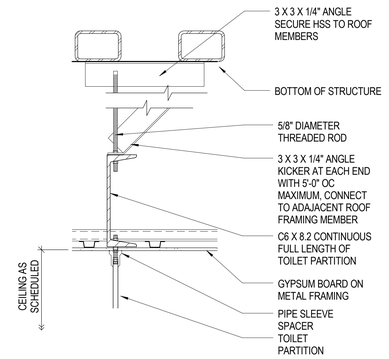

8 TOILET PARTITION SUPPORT DETAIL
1 1/2" = 1'-0"

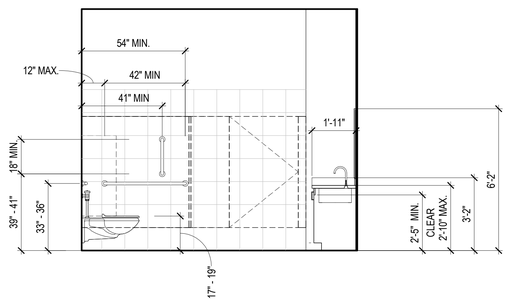

4 NORTH MENS
3/8" = 1'-0"

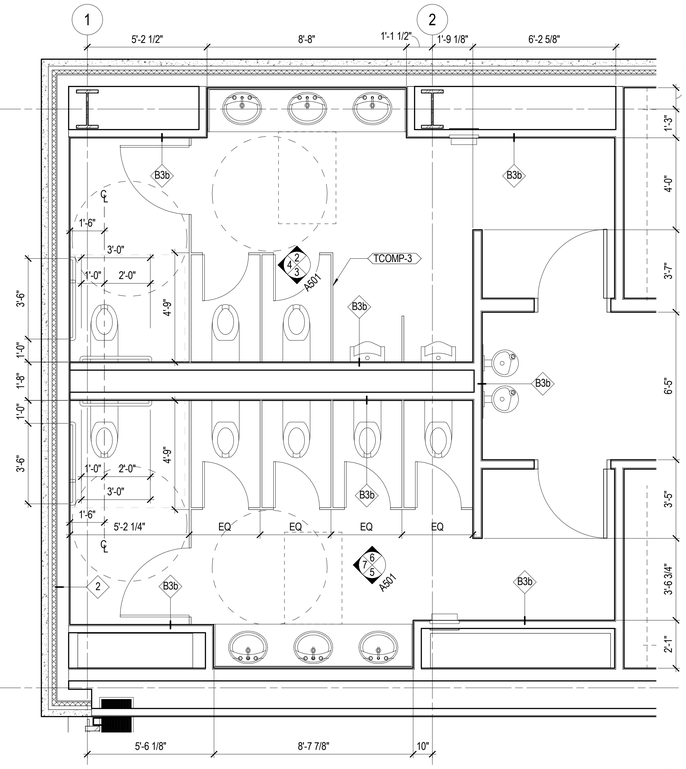

1 FLOOR PLAN - LEVEL 01 - Callout 8
3/8" = 1'-0"

HGA
333 East Erie Street
Milwaukee, Wisconsin 53202
Telephone 414.278.8200

ULINE
12575 Uline Drive
Pleasant Prairie, WI 53158

ULINE
SHIPPING SUPPLY SPECIALISTS

I HEREBY CERTIFY THAT THIS PLAN, SPECIFICATION OR REPORT WAS PREPARED BY ME OR UNDER MY DIRECT SUPERVISION AND THAT I AM A DULY LICENSED ARCHITECT UNDER THE LAWS OF THE STATE OF

NAME:
DATE: JULY 10, 2015
REGISTRATION NUMBER:

NO	DESCRIPTION	DATE
	CP-2	07/10/15

ISSUANCE HISTORY - THIS SHEET

HGA NO: 3595-001-00

ENLARGED BATHROOM PLANS AND ELEVATIONS

DATE: May 8, 2015

CONSTRUCTION DOCUMENTS

A501

© COPYRIGHT HAMMEL, GREEN AND ABRAHAMSON, INC.

C:\Users\gtroberts\Documents\Revit Local Files\359500100_UlineConferenceCenter_gtroberts-PC7505.rvt
7/10/2015 9:28:48 AM

4 EAST LOUNGE (WEST SIM)
1/4" = 1'-0"

1 EAST CONFERENCE ROOM (WEST SIM)
1/4" = 1'-0"

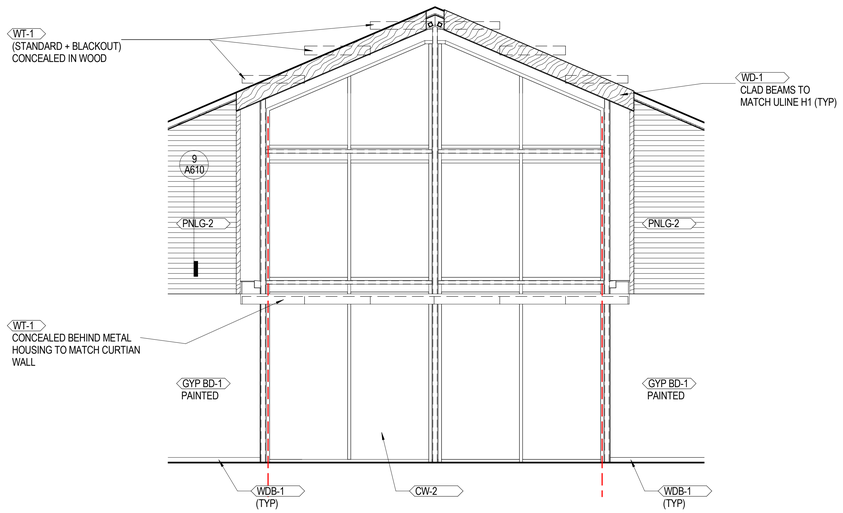

5 NORTH LOUNGE INTERIOR ELEVATION
1/4" = 1'-0"

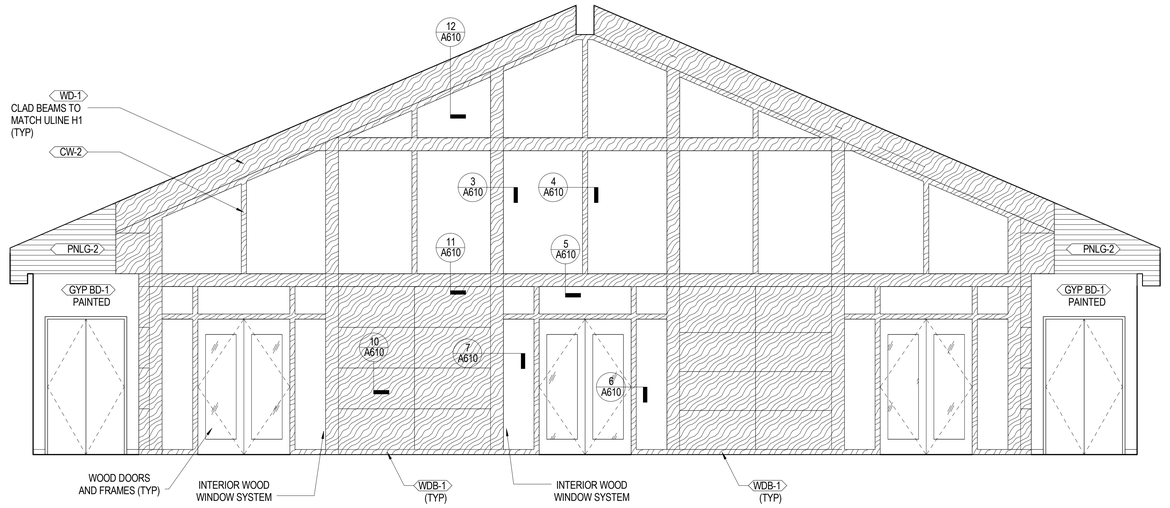

2 NORTH CONFERENCE ROOM
1/4" = 1'-0"

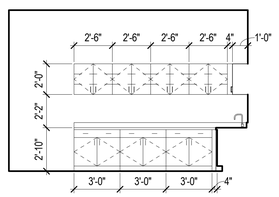

6 NORTH CATERING SUPPORT
1/4" = 1'-0"

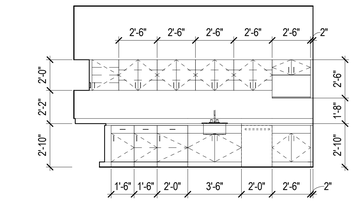

7 EAST CATERING SUPPORT
1/4" = 1'-0"

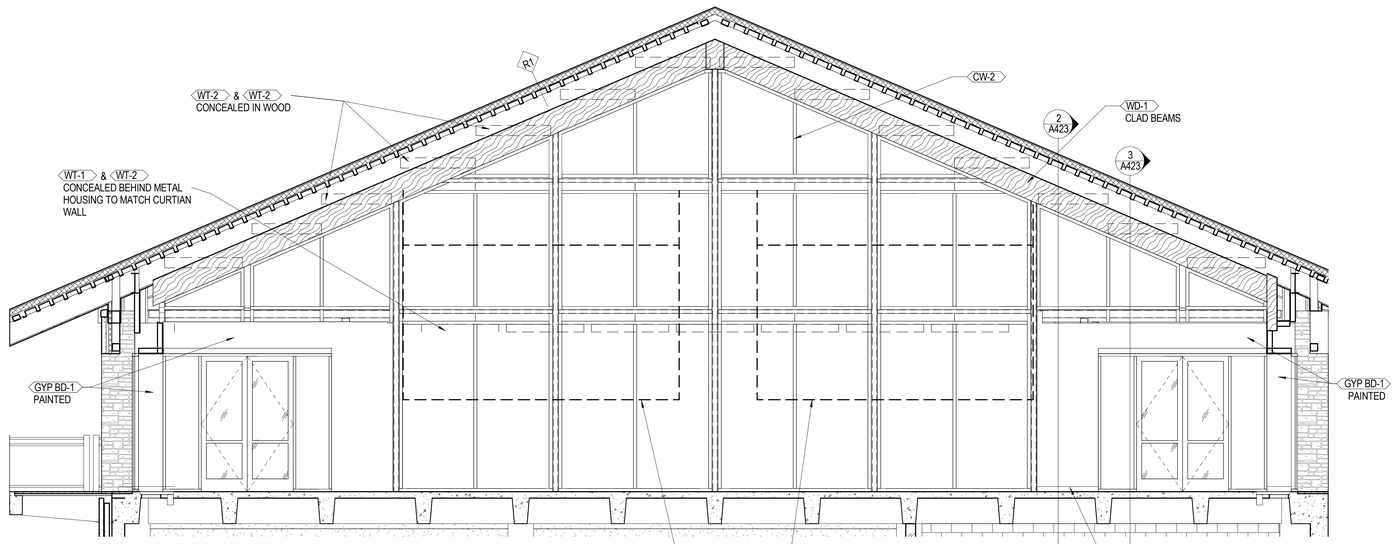

3 SOUTH CONFERENCE ROOM
1/4" = 1'-0"

333 East Erie Street
Milwaukee, Wisconsin 53202
Telephone 414.278.8200

ULINE
12575 Uline Drive
Pleasant Prairie, WI 53158

ULINE
SHIPPING SUPPLY SPECIALISTS

I HEREBY CERTIFY THAT THIS PLAN, SPECIFICATION OR REPORT WAS PREPARED BY ME OR UNDER MY DIRECT SUPERVISION AND THAT I AM A DULY LICENSED ARCHITECT UNDER THE LAWS OF THE STATE OF

NAME:
DATE: JULY 10, 2015
REGISTRATION NUMBER:

NO	DESCRIPTION	DATE
	CP-2	07/10/15

ISSUANCE HISTORY - THIS SHEET

HGA NO: 3595-001-00

INTERIOR ELEVATIONS

DATE: May 8, 2015

CONSTRUCTION DOCUMENTS

A601

© COPYRIGHT HAMMEL, GREEN AND ABRAHAMSON, INC.

7/10/2015 9:28:56 AM C:\Users\rjhoward\Documents\Revit Local Files\3595001D_UlineConferenceCenter_rjhoward.RCP505.rvt

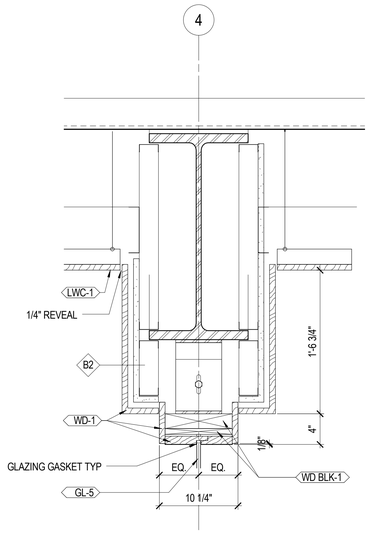

12 WOOD WINDOW HEAD @ BEAM COVER
1 1/2" = 1'-0"

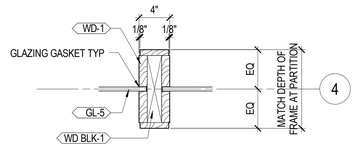

4 WOOD WINDOW JAMB DETAIL @ INTERMIDATE MULLION
1 1/2" = 1'-0"

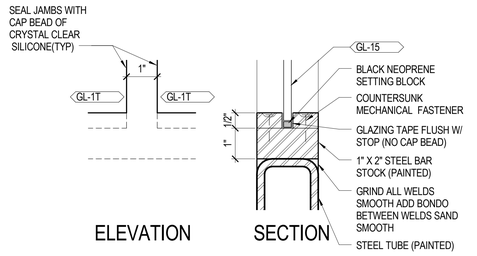

2 GUARDRAIL GLASS CONNECTION
6" = 1'-0"

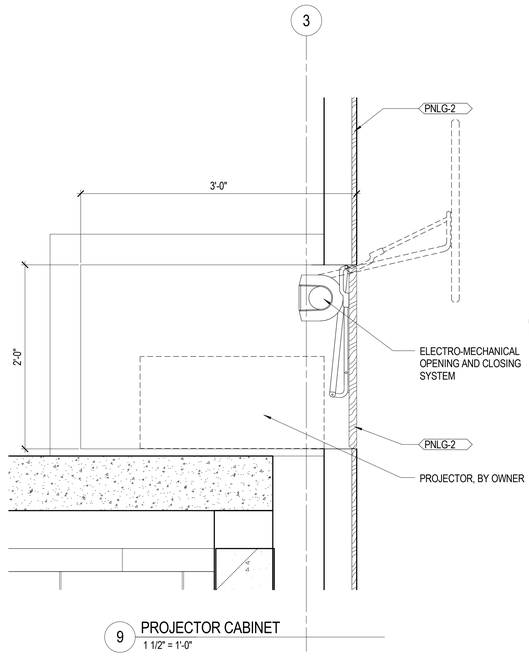

9 PROJECTOR CABINET
1 1/2" = 1'-0"

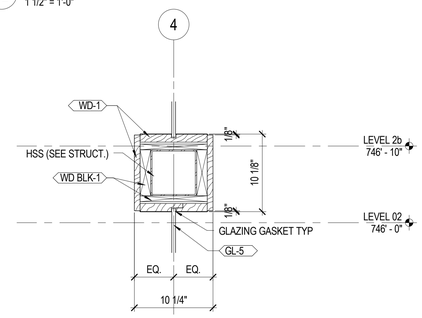

5 WOOD WINDOW HEAD AND SILL DETAIL @ STEEL BEAM
1 1/2" = 1'-0"

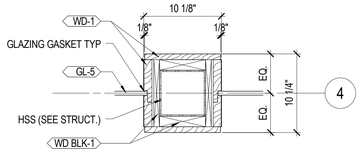

3 WOOD WINDOW JAMB DETAIL @ STEEL COLUMN
1 1/2" = 1'-0"

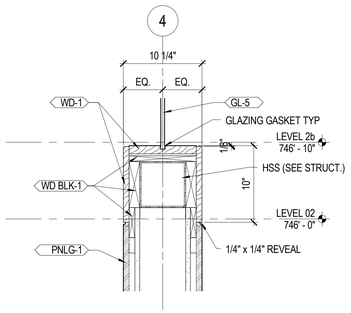

11 WOOD WINDOW SILL AND TRANSITION TO WOOD PANELS
1 1/2" = 1'-0"

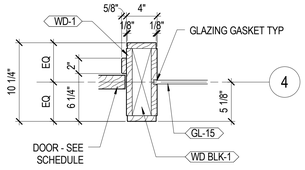

6 WOOD WINDOW/DOOR JAMB (TYPICAL)
1 1/2" = 1'-0"

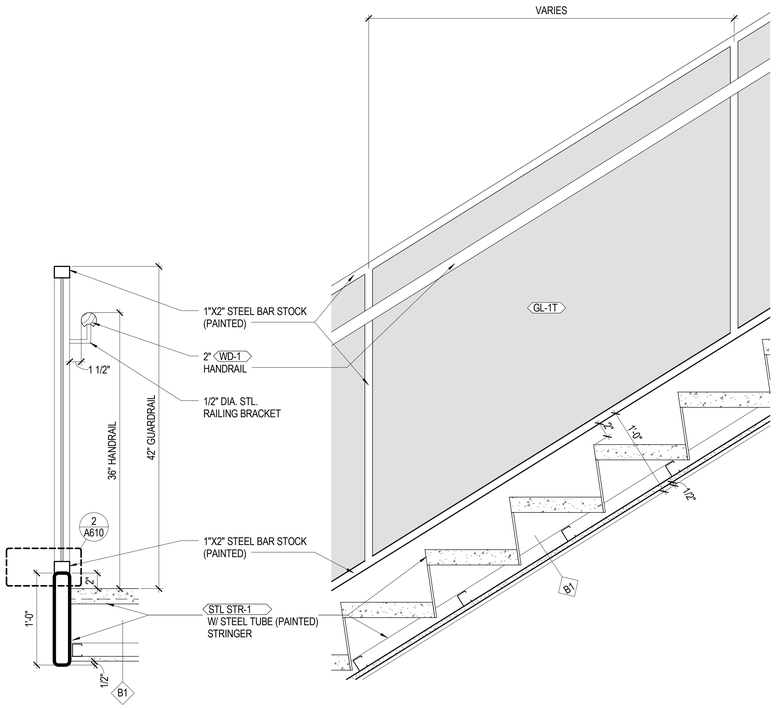

1 ORN RAIL-2 ELEVATION & SECTION
1 1/2" = 1'-0"

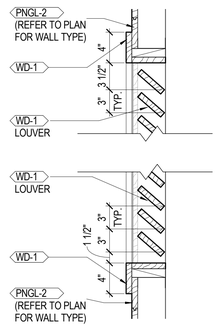

8 HEAD AND SILL DETAIL AT LOUVER
1 1/2" = 1'-0"

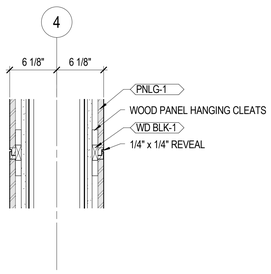

10 TYPICAL HORIZONTAL/VERTICAL REVAL
1 1/2" = 1'-0"

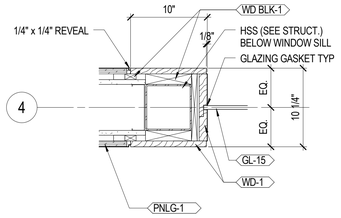

7 WOOD WINDOW JAMB @ WOOD PANEL
1 1/2" = 1'-0"

hga
333 East Erie Street
Milwaukee, Wisconsin 53202
Telephone 414.278.8200

ULINE
12575 Uline Drive
Pleasant Prairie, WI 53158

ULINE
SHIPPING SUPPLY SPECIALISTS

I HEREBY CERTIFY THAT THIS PLAN, SPECIFICATION OR REPORT WAS PREPARED BY ME OR UNDER MY DIRECT SUPERVISION AND THAT I AM A DULY LICENSED ARCHITECT UNDER THE LAWS OF THE STATE OF

NAME:
DATE: JULY 10, 2015
REGISTRATION NUMBER:

NO	DESCRIPTION	DATE
	CP-2	07/10/15

ISSUANCE HISTORY - THIS SHEET

HGA NO: 3595-001-00

INTERIOR DETAILS

DATE: May 8, 2015

CONSTRUCTION DOCUMENTS

A610

© COPYRIGHT HAMMEL, GREEN AND ABRAHAMSON, INC.

7/10/2015 9:29:02 AM C:\Users\rbordt\Documents\Revit Local Files\3595001000_UlineDarlingtonCenter_rbordt-PCP365.rvt

ABBREVIATIONS

A	
AB	ANCHOR BOLT
ADDL	ADDITIONAL
ADH	ADHESIVE
A/E	ARCHITECT / ENGINEER
AESS	ARCHITECTURALLY EXPOSED STRUCTURAL STEEL
AFF	ABOVE FINISHED FLOOR
ALT	ALTERNATE
APPROX	APPROXIMATE(LY)
ARCH	ARCHITECT(URAL)
B	
BFE	BOTTOM OF FOOTING ELEVATION
BM	BEAM
BOT	BOTTOM
BRG	BEARING
BTWN	BETWEEN
C	
C	AMERICAN STANDARD CHANNEL
CIP	CAST IN PLACE
CJ	CONTROL/CONSTRUCTION JOINT
CJP	COMPLETE JOINT PENETRATION
CL	CENTER LINE
CLR	CLEAR(ANCE)
CMU	CONCRETE MASONRY UNIT
COL	COLUMN
COMP	COMPOSITE
CONC	CONCRETE
CONN	CONNECTION
CONT	CONTINU(E)(OUS)(ATION)
D	
D&A	DRILL & ADHESIVE ANCHOR
DBA	DEFORMED BAR ANCHOR
DBE	DECK BEARING ELEVATION
DET	DETAIL
DIA	DIAMETER
DL	DEAD LOAD
DWG(S)	DRAWING(S)
DWL	DOWEL (REBAR)
E	
EA	EACH
EF	EACH FACE
EJ	EXPANSION JOINT (W/O COVER ASSEMBLY)
EL	ELEVATION
EQ	EQUAL
ES	EACH SIDE
EW	EACH WAY
EXG	EXISTING
EXP	EXPANSION
F	
FD	FLOOR DRAIN
FDN	FOUNDATION
FFE	FINISH FLOOR ELEVATION
FLG	FLANGE
FS	FAR SIDE/FOOTING STEP
FTG	FOOTING
G	
GA	GAUGE
GALV	GALVANIZED
GC	GENERAL CONTRACTOR
GLB	GLUE LAMINATED BEAM
GR	GRADE
H	
HORIZ	HORIZONTAL
HPT	HIGH POINT
HSS	HOLLOW STRUCTURAL SECTION
I	
IF	INSIDE FACE
INFO	INFORMATION
J	
JBE	JOIST BEARING ELEVATION
JST	JOIST
JT	JOINT
K	
K	KIP (1000 POUNDS)
L	
L	ANGLE
LB	POUND
LL	LIVE LOAD
LLH	LONG LEG HORIZONTAL
LLV	LONG LEG VERTICAL
LOC	LOCAT(E)(ION)
LONG	LONGITUDINAL(LY)
LPT	LOW POINT
LW	LIGHTWEIGHT

M	
MAX	MAXIMUM
MC	MISCELLANEOUS CHANNEL
MFR	MANUFACTURER
MIN	MINIMUM
MPII	MANUFACTURER'S PRINTED INSTALLATION INSTRUCTIONS
N	
NIC	NOT IN CONTRACT
NOM	NOMINAL
NS	NEAR SIDE
NSG	NON-SHRINK GROUT
NTS	NOT TO SCALE
NW	NORMAL WEIGHT
O	
OC	ON CENTER
OF	OUTSIDE FACE
OPG	OPENING
OPP	OPPOSITE
P	
PC	PRECAST
PJP	PARTIAL JOINT PENETRATION
PL	PLATE
PLF	POUNDS PER LINEAR FOOT
PSF	POUNDS PER SQUARE FOOT
PSI	POUNDS PER SQUARE INCH
PT	POST TENSION(ED)(ING)
R	
R	RADIUS/RADII
RD	ROOF DRAIN
REF	REFER(ENCE)
REINF	REINFORC(E)(ED)(ING)(EMENT)
REQD	REQUIRED
S	
S	S SHAPE
SCHED	SCHEDULE
SEOR	STRUCTURAL ENGINEER OF RECORD
SIM	SIMILAR
SOG	SLAB ON GRADE
SPEC(S)	SPECIFICATION(S)
SRCJ	SPECIALLY ROUGHENED CONSTRUCTION JOINT
SS	STAINLESS STEEL
STD	STANDARD
STIF	STIFFENER
STL	STEEL
STRUC	STRUCTUR(E)(AL)
SYM	SYMMETR(Y)(ICAL)
T	
T&B	TOP AND BOTTOM
TBE	TOP OF BEAM ELEVATION
TCE	TOP OF PILE CAP (DRILLED PIER CAP) ELEVATION
TDE	TOP OF DECK ELEVATION
TEMP	TEMPERATURE/TEMPORARY
TFE	TOP OF FOOTING ELEVATION
TLE	TOP OF LEDGE ELEVATION
TPE	TOP OF PIER ELEVATION
TRANSV	TRANSVERSE
TSE	TOP OF SLAB ELEVATION
TWE	TOP OF WALL ELEVATION
TYP	TYPICAL
U	
UNO	UNLESS NOTED OTHERWISE
V	
VERT	VERTICAL
VIF	VERIFY IN FIELD
VR	VAPOR RETARDER
W	
W	W SHAPE
W/	WITH
W/O	WITHOUT
WD	WOOD
WL	WIND LOAD
WPT	WORKPOINT
WT	WEIGHT/STRUCTURAL TEE
WWF	WELDED WIRE FABRIC

SPECIAL SYMBOLS

@	AT	/	PER
Ø	DIAMETER	⊥	PERPENDICULAR

GENERAL STRUCTURAL NOTES

APPLY UNLESS NOTED OTHERWISE ON STRUCTURAL DRAWINGS OR SPECIFICATIONS.

DESIGN CODE

2009 INTERNATIONAL BUILDING CODE WITH WISCONSIN AMENDMENTS

DESIGN LOADS

OCCUPANCY CATEGORY

NATURE OF OCCUPANCY..... BUILDING WHERE MORE THAN 300 PEOPLE CONGREGATE IN ONE AREA

OCCUPANCY CATEGORY..... III

FLOOR LIVE LOADS

FLOOR LOCATION	LIVE LOAD	REDUCED
ASSEMBLE AREAS	100 PSF	NO
DECKS (SAME AS OCCUPANCY SERVED)	100 PSF	NO
LOBBY AND CORRIDOR	100 PSF	NO
STAIRS AND EXITS	100 PSF	NO
STORAGE	125 PSF	NO
MECHANICAL ROOM	150 PSF	NO

SNOW LOAD

GROUND SNOW LOAD, Pg..... 30 PSF
FLAT ROOF SNOW LOAD, Pf..... 23 PSF
SNOW IMPORTANCE FACTOR..... 1.1
SNOW EXPOSURE FACTOR, Ce..... 1.0
THERMAL FACTOR (TYPICAL), Ct..... 1.0
THERMAL FACTOR (ROOF OVERHANGS, EXTERIOR DECK), Ct..... 1.2

WIND LOAD

BASIC WIND SPEED (3 SECOND GUST)..... 90 MPH
WIND IMPORTANCE FACTOR..... 1.15
WIND EXPOSURE CATEGORY..... C
MEAN ROOF HEIGHT..... 35 FT
INTERNAL PRESSURE COEFFICIENT..... ±0.18

COMPONENTS AND CLADDING WIND PRESSURES

ROOFS			WALLS		ROOF OVERHANGS	
ZONE 1	ZONE 2	ZONE 3	ZONE 4	ZONE 5	ZONE 2	ZONE 3
25 PSF	41 PSF	62 PSF	27 PSF	33 PSF	46 PSF	77 PSF

PRESSURES ARE MAXIMUM LEEWARD PRESSURES FOR 10 SQUARE FT TRIBUTARY AREA CALCULATED AT THE MEAN HEIGHT. ZONES ARE DEFINED IN ASCE 7-05 FIGURES 6-3 AND 6-11 THROUGH 6-17.

SEISMIC DESIGN DATA

SPECTRAL RESPONSE ACCELERATION, Ss..... 0.131
SPECTRAL RESPONSE ACCELERATION, S1..... 0.051
SITE CLASS..... C
SEISMIC IMPORTANCE FACTOR..... 1.25
SEISMIC DESIGN CATEGORY (SDC)..... A
BASE SHEAR..... 0.01 W KIPS

MAIN LATERAL FORCE RESISTING SYSTEM

RIGID MOMENT CONNECTIONS IN THE EAST-WEST DIRECTION.
CANTILEVERED COLUMNS IN THE NORTH-SOUTH DIRECTION.

MATERIALS

CAST-IN-PLACE CONCRETE

F'c=4000 PSI AT 28 DAYS

CONCRETE MASONRY

CONCRETE MASONRY UNITS..... ASTM C90 TYPE "N-1"
MASONRY GROUT..... F'c=3000 PSI AT 28 DAYS
MASONRY MORTAR..... ASTM C270 (TYPE S UNO)

STEEL REINFORCING

REINFORCING BARS..... ASTM A615 (GRADE 60)
WELDED BARS AND ANCHORS..... ASTM A706 (GRADE 60)
DEFORMED BAR ANCHORS..... ASTM A496
EPOXY-COATED REINFORCING BARS..... ASTM A775 OR ASTM A934
WELDED WIRE FABRIC..... ASTM A185

STRUCTURAL STEEL

W SHAPES (AND WT CUT FROM W SHAPES)..... ASTM A992 (Fy=50 KSI)
PLATES AND SHAPES OTHER THAN W..... ASTM A36 (Fy=36 KSI)
RECTANGULAR HSS..... ASTM A500, GRADE B (Fy=46 KSI)
ROUND HSS..... ASTM A500, GRADE B (Fy=42 KSI)
BOLTS..... ASTM A325/ASTM A490
ANCHOR RODS..... ASTM F1554 (Fy=36 KSI)
HEADED STUDS/SHEAR CONNECTORS..... ASTM A108

WOOD FRAMING

DIMENSION LUMBER

USE	E KSI	Fb PSI	Fv PSI	Fc ∥ PSI	Fc ⊥ PSI
PRESSURE TREATED JOISTS					
S. PINE NO. 2 (2x10)	1600	1050	175	1500	565
S. PINE NO. 2 (2x12)	1600	975	175	1450	565

FOUNDATIONS

FOUNDATION DESIGN PARAMETERS ARE BASED ON RECOMMENDATIONS FROM THE GEOTECHNICAL EXPLORATION REPORT NUMBER 00521162 DATED MARCH 18, 2015 BY PROFESSIONAL SERVICE INDUSTRIES, INC.

REFER TO THE GEOTECHNICAL REPORT FOR SOIL CLASSIFICATION.

FOOTINGS HAVE BEEN DESIGNED FOR A MAXIMUM NET SOIL BEARING PRESSURE OF 4000 PSF.

IF THE SOIL AT THE FOUNDATION OR SLAB-ON-GRADE ELEVATIONS SHOWN IS OF QUESTIONABLE BEARING VALUE, THE ARCHITECT/ENGINEER SHALL BE NOTIFIED AT ONCE FOR RESOLUTION.

ALL FOUNDATIONS SHALL BE CENTERED ON WALLS OR COLUMNS UNO.

WALLS RETAINING SOIL HAVE BEEN DESIGNED FOR AN EQUIVALENT FLUID PRESSURE OF 60 POUNDS PER CUBIC FOOT FOR "AT REST" CONDITIONS ABOVE THE WATER TABLE, 95 POUNDS PER CUBIC FOOT FOR "AT REST" CONDITIONS BELOW THE WATER TABLE AND 40 POUNDS PER CUBIC FOOT FOR "ACTIVE" CONDITIONS. LEVEL OF HIGH WATER TABLE SHALL BE CONSIDERED AT ELEVATION 732.25'.

WHERE FILL MATERIAL IS PLACED ON BOTH SIDES OF WALLS, IT SHALL BE PLACED IN LAYERS ALTERNATELY ON OPPOSITE SIDES TO MAINTAIN LEVELS THAT WILL AVOID DISPLACEMENT OF, OR DAMAGE TO, THE WALLS.

WHERE FILL MATERIAL IS PLACED ON ONE SIDE OF A WALL, THE WALL SHALL BE ADEQUATELY SHORED AND BRACED OR THE MATERIAL SHALL NOT BE PLACED UNTIL SUPPORTING FLOOR SLABS, INCLUDING SLABS-ON-GRADE, HAVE BEEN POURED AND SET.

CONTINUOUS FOOTINGS SHALL BE STEPPED AT A SLOPE OF ONE VERTICAL TO TWO HORIZONTAL.

PROTECT IN-PLACE FOUNDATIONS AND SLABS ON GRADE FROM FROST PENETRATION UNTIL PROJECT COMPLETION.

SLOPE BETWEEN ADJACENT FOOTINGS OR EXCAVATIONS SHALL NOT EXCEED ONE VERTICAL TO TWO HORIZONTAL. STEP FOOTINGS DOWN AS NECESSARY TO MAINTAIN THIS SLOPE.

CAST-IN-PLACE CONCRETE

CODE FOR REINFORCED CONCRETE DESIGN AND CONSTRUCTION - ACI 318.

ARRANGEMENT AND BENDING OF REINFORCING STEEL SHALL BE IN ACCORDANCE WITH ACI DETAILING MANUAL, LATEST EDITION.

REINFORCING STEEL SHALL BE NEW DEFORMED BARS.

CLEAR COVER REQUIREMENTS:

CONCRETE COVER TO REINFORCING STEEL, UNLESS NOTED OTHERWISE, SHALL BE AS FOLLOWS:

SURFACES CAST AGAINST EARTH..... 3"

FORMED SURFACES IN CONTACT WITH EARTH OR EXPOSED TO WEATHER:
#6 OR LARGER..... 2"
#5 OR SMALLER..... 1 1/2"

FORMED SURFACES NOT IN CONTACT WITH EARTH OR EXPOSED TO WEATHER:
WALLS, SLABS, JOISTS..... 1"
BEAMS, COLUMNS..... 1 1/2"

NON-CONTINUOUS ENDS OF TOP BARS IN BEAMS AND SLABS SHALL TERMINATE IN A STANDARD HOOK, UNLESS DETAILED OTHERWISE. BAR LENGTHS INDICATED DO NOT INCLUDE HOOKS WHERE THEY OCCUR.

WHERE REINFORCING BARS ARE SHOWN CONTINUOUS, PROVIDE CLASS B TENSION LAP SPLICES (12" MINIMUM) EXCEPT WHERE NOTED OR DETAILED OTHERWISE. LAP WWF WIRE SPACING PLUS 2" (6" MINIMUM).

DETAIL AND PROVIDE SUITABLE WIRE SPACERS, CHAIRS, TIES, ETC., FOR SUPPORTING REINFORCING STEEL IN THE PROPER POSITION WHILE PLACING CONCRETE.

ALL CHAIRS SUPPORTED BY GRADE SHALL INCLUDE SAND PLATES.

BAR SUPPORTS WHICH COME IN CONTACT WITH EXPOSED SURFACES SHALL HAVE PLASTIC OR RUBBER TIPS OR BE STAINLESS STEEL.

PROVIDE DOWELS OF SAME SIZE AND SPACING AS VERTICAL WALL OR COLUMN PIER REINFORCING AT THE FOUNDATION, UNLESS NOTED OTHERWISE. DOWELS SHALL BE TIED IN PLACE PRIOR TO CONCRETE PLACEMENT.

PROVIDE BENT CORNER BARS TO MATCH AND LAP WITH HORIZONTAL BARS AT CORNERS AND INTERSECTIONS OF WALLS, BEAMS, AND FOOTINGS.

CONTINUOUS TOP BARS IN WALLS AND BEAMS SHALL BE SPLICED AT MIDSPAN AND BOTTOM BARS OVER SUPPORTS, UNLESS NOTED OTHERWISE.

DRAWINGS SHOWING LOCATION OF CONSTRUCTION AND CONTROL JOINTS AND PLACING SEQUENCE SHALL BE SUBMITTED FOR ENGINEER'S REVIEW PRIOR TO PREPARATION OF THE REINFORCING STEEL SHOP DRAWINGS.

HORIZONTAL CONSTRUCTION JOINTS ARE NOT PERMITTED IN CONCRETE MEMBERS UNLESS SHOWN ON THE DRAWINGS OR APPROVED IN ADVANCE. VERTICAL CONSTRUCTION JOINTS OR BULKHEADS SHALL BE MADE AT MIDSPAN OR POINTS OF MINIMUM SHEAR.

SIZE OF CONCRETE POURS BETWEEN CONSTRUCTION JOINTS SHALL BE LIMITED TO:

WALLS..... MAXIMUM LENGTH 100 FT WITH INTERMEDIATE CONTROL JOINTS AT APPROXIMATELY 30 FT. DO NOT LOCATE WITHIN 5 FT OF A CORNER OR COLUMN. COORDINATE LOCATIONS WITH VENEER JOINTS.
SLABS ON GRADE..... 3600 SQUARE FT WITH MAXIMUM DIMENSION OF 60 FT; PLACE IN LANE OR STRIP FASHION WITH INTERMEDIATE CONTROL JOINTS AT APPROXIMATELY 20 FT OR 15 FT FOR EXPOSED CONCRETE SURFACES. COORDINATE LOCATIONS WITH FLOOR FINISHES.
CONCRETE ON METAL DECK..... 10000 SQUARE FT WITH MAXIMUM DIMENSION OF 100 FT.

VERIFY LOCATION OF OPENINGS SHOWN THROUGH CONCRETE SLABS OR WALLS AND COORDINATE ANY ADDITIONAL REQUIRED OPENINGS WITH OTHER TRADES AND THE ARCHITECT/ENGINEER.

CONCRETE EXPOSED TO FREEZING AND THAWING SHALL CONTAIN 6% (PLUS OR MINUS 1.5%) ENTRAINED AIR.

THICKEN SLABS ON GRADE BELOW NON-BEARING INTERIOR MASONRY WALLS.

ALUMINUM CONDUIT OR PIPING MAY NOT BE EMBEDDED IN ANY CONCRETE.

CALCIUM CHLORIDE IS NOT PERMITTED AS A CONCRETE ADDITIVE.

STRUCTURAL STEEL

LATEST A.I.S.C. MANUAL AND SPECIFICATIONS APPLY.

WELDING ELECTRODES SHALL BE 70 KSI.

ALL WELDING AND TESTING OF WELDS SHALL BE IN ACCORDANCE WITH AMERICAN WELDING SOCIETY CODES AND RECOMMENDATIONS.

ALL WELDING SHALL BE BY WELDERS HOLDING CURRENT VALID CERTIFICATES IN THE TYPE OF WELD REQUIRED.

ALL BOLTED CONNECTIONS IN MOMENT FRAMES, BEAMS WITH AXIAL FORCES, AND BEAMS BRACING MOMENT FRAMES SHALL BE SLIP CRITICAL USING TYPE "SC" BOLTS.

UNLESS DETAILED OTHERWISE, ALL BEAM CONNECTIONS SHALL BE DOUBLE ANGLE CONNECTIONS WITH A325N BOLTS IN ACCORDANCE WITH A.I.S.C. FRAMED BEAM CONNECTION TABLES. (SEE DRAWINGS FOR NUMBER OF ROWS OF BOLTS REQUIRED.) WELDS AND ANGLES DESIGNED TO DEVELOP THE EQUIVALENT CAPACITY MAY BE USED INSTEAD OF BOLTS.

CONTRACTOR SHALL PROVIDE THE NECESSARY BRACING DURING ERECTION AND UNTIL ALL STEEL IS PLUMB AND SECURED.

FIELD CUTTING OR OTHER FIELD MODIFICATIONS TO STRUCTURAL STEEL SHALL NOT BE MADE WITHOUT SPECIFIC PRIOR WRITTEN APPROVAL OF THE ARCHITECT/ENGINEER.

ALL BEAM COPES MUST BE MADE TO A RADIUS (1/2" MINIMUM).

STRUCTURAL STEEL FRAMING SHALL BE TRUE AND PLUMB BEFORE CONNECTIONS ARE FINALLY BOLTED OR WELDED.

INSTALL EXPANSION ANCHORS IN ACCORDANCE WITH THE MANUFACTURER RECOMMENDATIONS.

ANCHOR RODS ARE NOT DESIGNED TO SUPPORT ERECTION LOADS, EXCEPT AS REQUIRED BY OSHA 1926 SUBPART R.

STEEL FABRICATOR SHALL COMPLY WITH OSHA STANDARDS IN DETAILING AND FABRICATING STEEL FOR ERECTION.

STEEL DECKING

STEEL DECK INSTITUTE SPECIFICATIONS AND RECOMMENDATIONS APPLY.

SEE PLANS FOR DECK, FINISH, FASTENER, AND SIDE LAP INFORMATION.

PROVIDE CLOSURE PLATES AND ACCESSORIES AS REQUIRED.

MASONRY

PROVIDE REINFORCING BARS AT LOCATIONS INDICATED ON THE DRAWINGS. LAP 48 BAR DIAMETERS AT SPLICES UNLESS NOTED OTHERWISE.

GROUT CORES WITH MASONRY GROUT IN 5'-0" MAXIMUM LIFTS. GROUT LIFT SHALL TERMINATE 1 1/2" BELOW BED JOINT IN WALL. LIFTS SHALL BE CONSOLIDATED USING MECHANICAL VIBRATION.

PROVIDE BAR POSITIONERS AT OR NEAR TOP AND BOTTOM OF LIFT TO MAINTAIN BAR POSITION WHILE GROUTING. BARS MUST BE IN PLACE PRIOR TO GROUTING. PLACEMENT OF STEEL REINFORCEMENT INTO WET GROUT WILL NOT BE PERMITTED.

PROVIDE (2)-#5 VERTICAL BELOW BEAM AND LINTEL BEARINGS AND GROUT CORE FULL HEIGHT. BEARING DISTANCE SHALL BE A MINIMUM OF 8".

PLACE CONSTRUCTION JOINTS IN MASONRY WALLS SUCH THAT NO STRAIGHT RUN OF MASONRY EXCEEDS 40'-0", UNLESS NOTED OTHERWISE.

CORES CONTAINING VERTICAL REINFORCING SHALL BE GROUTED SOLID WITH MASONRY GROUT. FILLING CORES WITH MORTAR IS NOT ACCEPTABLE.

PROVIDE BENT CORNER BARS TO MATCH AND LAP WITH HORIZONTAL BARS AT CORNERS AND INTERSECTIONS OF WALLS AND BOND BEAMS.

MASONRY STRENGTH NOTES:

F'm = 1500 PSI, EXCEPT WHERE NOTED OTHERWISE ON DRAWINGS.

THE REQUIRED STRENGTH SHALL BE VERIFIED BY THE UNIT STRENGTH METHOD PER IBC 2105.2.2.1. COMPRESSIVE STRENGTH OF MASONRY UNITS SHALL BE AS REQUIRED PER IBC TABLE 2105.2.2.1.2 FOR TYPE 'M' OR 'S' MORTAR.

IF THE MASONRY DOES NOT MEET THE REQUIREMENTS FOR APPLICATION OF THE UNIT STRENGTH METHOD, PRISM TESTING PER IBC 2105.2.2.2 AND ASTM C1314 SHALL BE USED. THE COMPRESSIVE STRENGTH OF THE MASONRY SHALL BE TAKEN AS THE AVERAGE STRENGTH OF THREE PRISMS.

SUPPLEMENTAL NOTES

EXAMINE ARCHITECTURAL, MECHANICAL, PLUMBING, AND ELECTRICAL DRAWINGS TO DETERMINE LOCATION AND DIMENSIONS OF CHASES, INSERTS, OPENINGS, SLEEVES, REVEALS, DEPRESSIONS AND OTHER PROJECT REQUIREMENTS NOT SHOWN ON STRUCTURAL DRAWINGS.

BEFORE FABRICATION AND ERECTION OF ANY MATERIALS, FIELD VERIFY ALL EXISTING ELEVATIONS, DIMENSIONS AND CONDITIONS AS SHOWN ON THE DRAWINGS AND REPORT ANY DISCREPANCIES TO THE ARCHITECT/ENGINEER AT ONCE FOR RESOLUTION.

STRUCTURAL MEMBERS ARE DESIGNED FOR "IN PLACE" LOADS. CONTRACTOR IS RESPONSIBLE FOR BRACING, WITHOUT OVERSTRESSING, ALL STRUCTURAL ELEMENTS (AS REQUIRED AT ANY STAGE OF CONSTRUCTION) UNTIL COMPLETION OF THIS PROJECT.

FOLLOW OSHA SAFETY STANDARDS FOR STEEL ERECTION AND METAL DECKING ERECTION.

WOOD FRAMING

ALL CONSTRUCTION SHALL COMPLY WITH THE CONVENTIONAL CONSTRUCTION PROVISIONS OF THE INTERNATIONAL BUILDING CODE (CHAPTER 23) AND THE NATIONAL DESIGN SPECIFICATION, UNLESS NOTED OTHERWISE.

ALL SAWN LUMBER SHALL BE STAMPED WITH THE GRADE MARK OF AN APPROVED LUMBER GRADING AGENCY.

ALL NAILS SHALL BE COMMON NAILS, UNLESS NOTED OTHERWISE. REFER TO THE NAILING SCHEDULE IN THE INTERNATIONAL BUILDING CODE (TABLE NO. 2304.9.1) FOR CONNECTIONS NOT DETAILED.

ALL BOLTED SILL PLATES, TOP PLATES, LEDGERS, ETC., SHALL HAVE BOLTS WITHIN 6" OF END OF ALL SPLICES AND SHALL HAVE A MINIMUM OF TWO BOLTS PER SECTION OR AS INDICATED ON DRAWINGS.

PROVIDE 1 X 4 BRIDGING OR SOLID BLOCKING AT 8'-0" MAXIMUM CENTERS FOR JOISTS.

DO NOT NOTCH OR DRILL JOISTS WITHOUT PRIOR APPROVAL OF THE STRUCTURAL ENGINEER.

CONCRETE CORE DRILLING

SLABS

VERTICAL CORE DRILLING IS PERMITTED THROUGH CONCRETE SLABS OF 5" THICKNESS OR LESS AND FOR HOLES OF 10" DIAMETER OR LESS. VERTICAL CORE DRILLING IN OTHER SLAB LOCATIONS IS ONLY ALLOWED WITH EXPLICIT PERMISSION OF THE STRUCTURAL ENGINEER. MAINTAIN SOUND CONCRETE BETWEEN SUCCESSIVE CORES EQUAL TO THE LARGER DIAMETER CORE ON EITHER SIDE.

WALLS

HORIZONTAL CORE DRILLING IS PERMITTED THROUGH CONCRETE WALLS FOR HOLES 3" DIAMETER OR LESS. HORIZONTAL CORE DRILLING IN OTHER WALL LOCATIONS IS ONLY ALLOWED WITH EXPLICIT PERMISSION OF THE STRUCTURAL ENGINEER. MAINTAIN SOUND CONCRETE BETWEEN SUCCESSIVE CORES EQUAL TO THE LARGER DIAMETER CORE ON EITHER SIDE.

BEAMS AND JOISTS

VERTICAL AND HORIZONTAL CORE DRILLING IS ONLY PERMITTED WITH EXPLICIT PERMISSION OF THE STRUCTURAL ENGINEER.

SLEEVE LAYOUT DRAWINGS

SLEEVES FOR ARCHITECTURAL, MECHANICAL, PLUMBING, AND ELECTRICAL ITEMS ARE NOT SHOWN ON THE STRUCTURAL FRAMING PLANS. EXAMINE ARCHITECTURAL, MECHANICAL, PLUMBING, AND ELECTRICAL DRAWINGS TO DETERMINE SIZE AND LOCATION OF REQUIRED SLEEVES.

GENERAL CONTRACTOR TO PROVIDE SLEEVE LAYOUT DRAWINGS FOR ENGINEER'S REVIEW IN CONJUNCTION WITH REINFORCING BAR SHOP DRAWINGS FOR ELEVATED SLABS. ELEVATED SLAB REINFORCING BAR SHOP DRAWINGS WILL NOT BE REVIEWED OR APPROVED UNLESS ACCOMPANIED BY SLEEVE LAYOUT DRAWINGS.

SLEEVE LAYOUT DRAWINGS SHALL SHOW OUTSIDE SLEEVE DIAMETER AND DIMENSIONED LOCATIONS FROM GRIDS IN TWO DIRECTIONS FOR ALL SLEEVES PLACED WITHIN BEAMS AND JOISTS. SLEEVES PLACED IN 5 INCH THICK AND THINNER SLABS NEED ONLY BE SHOWN GRAPHICALLY WITH THE SLEEVE DIAMETER AND DO NOT NEED TO BE DIMENSIONED FROM GRIDS.

SEE DETAIL 6/S510 FOR ADDITIONAL REQUIREMENTS AT SLEEVES THROUGH BEAMS AND JOISTS.

hga.
333 East Erie Street
Milwaukee, Wisconsin 53202
Telephone 414.278.8200

ULINE
12575 Uline Drive
Pleasant Prairie, WI 53158

ULINE
SHIPPING SUPPLY SPECIALISTS

NO	DESCRIPTION	DATE
	CP-1	5/8/2015
	CP-2	7/10/2015

ISSUANCE HISTORY - THIS SHEET

HGA NO: 3595-001-00

GENERAL STRUCTURAL NOTES AND ABBREVIATIONS

DATE: May 8, 2015

CONSTRUCTION DOCUMENTS

S001

© COPYRIGHT HAMMEL, GREEN AND ABRAHAMSON, INC.

C:\Users\glandrewk\Documents\Revit Local Files\S15_3595001100_UlineConferenceCenter_glandrewk-PC6630.rvt
7/9/2015 2:30:02 PM

ADDITIONAL GENERAL STRUCTURAL NOTES

POST-INSTALLED ANCHORAGE PRODUCTS

ANCHORS TO CONCRETE (BASIS OF DESIGN)

EXPANSION ANCHORS..... HILTI KWIK BOLT-TZ
SCREW ANCHORS..... HILTI KWIK HUS-EZ
ADHESIVE ANCHORS..... HILTI HIT-HY 200

ANCHORS TO GROUTED MASONRY (BASIS OF DESIGN)

EXPANSION ANCHORS..... HILTI KWIK BOLT 3
ADHESIVE ANCHORS..... HILTI HIT-HY 70

ANCHORS TO HOLLOW-CORE MASONRY (BASIS OF DESIGN)

SLEEVE ANCHORS..... HILTI HLC
ADHESIVE ANCHORS..... HILTI HIT-HY 70

ANCHORAGE TO CONCRETE AND GROUTED MASONRY

EXPANSION AND SCREW ANCHORS TO CONCRETE SHALL HAVE ICC-ES REPORT APPROVAL FOR THE DESIGN CODE FOR USE WITH CRACKED CONCRETE IN ACCORDANCE WITH ACCEPTANCE CRITERIA AC193 AND ACI 355.2.

ADHESIVE ANCHORS TO CONCRETE SHALL HAVE ICC-ES REPORT APPROVAL FOR THE DESIGN CODE FOR USE WITH CRACKED CONCRETE IN ACCORDANCE WITH ACCEPTANCE CRITERIA AC308 AND ACI 355.4.

EXPANSION ANCHORS TO GROUTED MASONRY SHALL HAVE ICC-ES REPORT APPROVAL FOR THE DESIGN CODE FOR USE WITH GROUTED MASONRY IN ACCORDANCE WITH ACCEPTANCE CRITERIA AC01.

ADHESIVE ANCHORS TO GROUTED MASONRY SHALL HAVE ICC-ES REPORT APPROVAL FOR THE DESIGN CODE FOR USE WITH GROUTED MASONRY IN ACCORDANCE WITH ACCEPTANCE CRITERIA AC58, INCLUDING CREEP TESTING.

CURRENT ICC-ES REPORTS SHALL BE SUBMITTED UPON REQUEST.

ANCHORS SHALL BE INSTALLED IN ACCORDANCE WITH THE MANUFACTURER'S PRINTED INSTALLATION INSTRUCTIONS (MPII).

ALL PERSONNEL INSTALLING SPECIFIED ANCHORING PRODUCTS SHALL BE TRAINED ONSITE BY THE MANUFACTURER ON PROPER INSTALLATION TECHNIQUE. CERTIFICATION FROM THE MANUFACTURER SHALL BE AVAILABLE UPON REQUEST. SEE ADHESIVE ANCHOR NOTES FOR ADDITIONAL INSTALLER CERTIFICATION REQUIREMENTS.

ANCHOR CAPACITY IS DEPENDENT UPON SPACING BETWEEN ADJACENT ANCHORS AND PROXIMITY OF ANCHORS TO EDGE OF CONCRETE. INSTALL ANCHORS IN ACCORDANCE WITH SPACING AND EDGE CLEARANCES INDICATED ON THE DRAWINGS.

COORDINATE CONSTRUCTION SUCH THAT INTERFERENCE OF REINFORCING STEEL WITH CONCRETE ANCHOR PLACEMENT DOES NOT OCCUR. IF REINFORCING STEEL IS ENCOUNTERED DURING DRILLING, ADJUST THE ANCHOR LOCATION IF POSSIBLE AND NOTIFY THE STRUCTURAL ENGINEER. DO NOT CUT OR DAMAGE REINFORCING STEEL DURING DRILLING, UNLESS EXPLICITLY PERMITTED BY THE STRUCTURAL ENGINEER OF RECORD.

DO NOT INSTALL ANCHORS INTO POST-TENSIONED CONCRETE MEMBERS UNLESS EXPLICITLY PERMITTED IN WRITING BY THE STRUCTURAL ENGINEER OF RECORD. WHERE APPROVED, ALL POST-TENSIONING AND REINFORCEMENT MUST BE LOCATED USING NON-DESTRUCTIVE TESTING PRIOR TO ANCHOR INSTALLATION. DO NOT DAMAGE POST-TENSIONING TENDONS.

ANCHORS OTHER THAN THOSE LISTED AS BASIS OF DESIGN OR AS DETAILED IN THE STRUCTURAL CONSTRUCTION DOCUMENTS MUST PROVIDE EQUAL OR GREATER CAPACITY. SUBMIT A SUBSTITUTION REQUEST WITH A CURRENT ICC-ES REPORT AND SIGNED STRUCTURAL CALCULATIONS PERFORMED BY AN ENGINEER LICENSED IN THE STATE WHERE THE PROJECT IS LOCATED INDICATING THAT THE ALTERNATE ANCHOR TYPE, SPACING, AND EMBEDMENT PROVIDE EQUAL OR GREATER CAPACITY THAN THE BASIS OF DESIGN INCLUDED IN THE CONSTRUCTION DOCUMENTS.

EXPANSION ANCHORS TO CONCRETE

EXPANSION ANCHORS INDICATED IN THE DRAWINGS ARE BASED UPON DESIGN VALUES (BASIS OF DESIGN) FOR CARBON STEEL HILTI KWIK BOLT TZ EXPANSION ANCHORS WITH THE FOLLOWING MINIMUM EFFECTIVE EMBEDMENTS UNO:

3/4" DIA.....4 3/4"
5/8" DIA.....4"
1/2" DIA.....3 1/4"
3/8" DIA.....2"

SCREW ANCHORS TO CONCRETE

SCREW ANCHORS INDICATED IN THE DRAWINGS ARE BASED UPON DESIGN VALUES (BASIS OF DESIGN) FOR HILTI KWIK HUS-EZ SCREW ANCHORS WITH THE FOLLOWING MINIMUM EFFECTIVE EMBEDMENTS UNO:

3/4" DIA.....6 1/4"
5/8" DIA.....5"
1/2" DIA.....4 1/4"
3/8" DIA.....3 1/4"

ADHESIVE ANCHORS TO CONCRETE

ADHESIVE ANCHORS INDICATED IN THE DRAWINGS ARE BASED UPON DESIGN VALUES (BASIS OF DESIGN) FOR HILTI HIT-HY 200 ADHESIVE AND HILTI STANDARD HAS THREADED RODS OR ASTM A615 REINFORCING BARS WITH MINIMUM EFFECTIVE EMBEDMENTS AS INDICATED IN THE DRAWINGS USING THE FOLLOWING ADHESIVE BOND STRENGTH DESIGN ASSUMPTIONS FOR CRACKED NORMAL WEIGHT CONCRETE:

LONG TERM TEMPERATURE.....75 °F
SHORT TERM TEMPERATURE.....104 °F
MOISTURE CONDITION.....DRY CONCRETE
HOLE DRILLING TECHNIQUE.....ROTARY IMPACT HAMMER DRILL OR ROCK DRILL

CONCRETE AT TIME OF ADHESIVE ANCHOR INSTALLATION SHALL HAVE A MINIMUM AGE OF 21 DAYS AND HAVE A MINIMUM COMPRESSIVE STRENGTH OF 2500 PSI.

IF TEMPERATURE IS EXPECTED TO DROP BELOW 14°F, PROVIDE ENVIRONMENTAL ENCLOSURE WITH SUPPLEMENTAL HEAT TO ENSURE THE INTERNAL TEMPERATURE OF THE CONCRETE SUBSTRATE DOES NOT FALL BELOW 14°F UNTIL FULLY CURED IN ACCORDANCE WITH THE MPII.

INSTALLED ANCHORS SHALL BE SECURELY FIXED IN-PLACE TO PREVENT DISPLACEMENT WHILE THE ADHESIVE CURES. UNLESS INDICATED OTHERWISE IN THE DRAWINGS, ANCHORS SHALL BE INSTALLED PERPENDICULAR TO THE CONCRETE SURFACE. ANCHORS DISPLACED BEFORE FULL ADHESIVE CURE SHALL BE CONSIDERED DAMAGED AND REPLACED AT THE CONTRACTOR'S EXPENSE.

INSTALLATION OF ADHESIVE ANCHORS OVERHEAD OR UPWARDLY INCLINED SHALL BE PERFORMED BY PERSONNEL CERTIFIED BY THE ACI/CRSI ADHESIVE ANCHOR INSTALLER CERTIFICATION PROGRAM. INSTALLER CERTIFICATION FROM THE CONTRACTOR/INSTALLER SHALL BE SUBMITTED TO THE STRUCTURAL ENGINEER OF RECORD FOR REVIEW.

INSTALLATION OF ADHESIVE ANCHORS OVERHEAD OR UPWARDLY INCLINED SHALL BE CONTINUOUSLY INSPECTED DURING INSTALLATION BY A QUALIFIED SPECIAL INSPECTOR APPROVED FOR THAT PURPOSE BY THE BUILDING OFFICIAL.

HORIZONTAL AND DOWNHAND INSTALLATIONS OF ADHESIVE ANCHORS THAT SUPPORT SUSTAINED TENSION LOADS SHALL ALSO MEET THE CONTINUOUS INSPECTION AND CERTIFIED INSTALLER REQUIREMENTS SPECIFIED.

EXPANSION ANCHORS TO GROUTED MASONRY

EXPANSION ANCHORS INDICATED IN THE DRAWINGS ARE BASED UPON DESIGN VALUES (BASIS OF DESIGN) FOR CARBON STEEL HILTI KWIK BOLT 3 EXPANSION ANCHORS WITH THE FOLLOWING MINIMUM EFFECTIVE EMBEDMENTS UNO:

3/4" DIA.....5"
5/8" DIA.....4"
1/2" DIA.....3 1/4"
3/8" DIA.....2"

ADHESIVE ANCHORS TO GROUTED MASONRY

ADHESIVE ANCHORS INDICATED IN THE DRAWINGS ARE BASED UPON DESIGN VALUES (BASIS OF DESIGN) FOR HILTI HIT-HY 70 ADHESIVE AND HILTI STANDARD HAS THREADED RODS OR ASTM A615 REINFORCING BARS INSTALLED IN UNCRACKED GROUT-FILLED CONCRETE MASONRY UNITS WITH MINIMUM EFFECTIVE EMBEDMENTS AS INDICATED IN THE DRAWINGS.

MASONRY GROUT AT TIME OF ADHESIVE ANCHOR INSTALLATION SHALL HAVE A MINIMUM AGE OF 21 DAYS AND HAVE A MINIMUM COMPRESSIVE STRENGTH OF 1500 PSI.

IF TEMPERATURE IS EXPECTED TO DROP BELOW 23°F, PROVIDE ENVIRONMENTAL ENCLOSURE WITH SUPPLEMENTAL HEAT TO ENSURE THE INTERNAL TEMPERATURE OF THE CONCRETE SUBSTRATE DOES NOT FALL BELOW 23°F UNTIL FULLY CURED IN ACCORDANCE WITH THE MPII.

INSTALLED ANCHORS SHALL BE SECURELY FIXED IN-PLACE TO PREVENT DISPLACEMENT WHILE THE ADHESIVE CURES. UNLESS INDICATED OTHERWISE IN THE DRAWINGS, ANCHORS SHALL BE INSTALLED PERPENDICULAR TO THE MASONRY UNIT SURFACE. ANCHORS DISPLACED BEFORE FULL ADHESIVE CURE SHALL BE CONSIDERED DAMAGED AND REPLACED AT THE CONTRACTOR'S EXPENSE.

ANCHORAGE IN HOLLOW-CORE CONCRETE MASONRY UNITS

SLEEVE ANCHORS

SLEEVE ANCHORS INDICATED IN THE DRAWINGS ARE BASED UPON VALUES (BASIS OF DESIGN) FOR CARBON STEEL HILTI HLC SLEEVE ANCHORS.

SLEEVE ANCHORS OTHER THAN HILTI HLC MAY REQUIRE REVISION OF ANCHOR SIZE AND/OR SPACING. SUBMIT ENGINEERING DATA AND DOCUMENTATION TO THE STRUCTURAL ENGINEER PRIOR TO USE OF ALTERNATE SLEEVE ANCHORS FOR SIZE AND/OR SPACING REVISIONS.

333 East Erie Street
Milwaukee, Wisconsin 53202
Telephone 414.278.8200

ULINE
12575 Uline Drive
Pleasant Prairie, WI 53158

ULINE
SHIPPING SUPPLY SPECIALISTS

NO	DESCRIPTION	DATE
	CP-1	5/8/2015
	CP-2	7/10/2015

ISSUANCE HISTORY - THIS SHEET

HGA NO: 3595-001-00

GENERAL STRUCTURAL NOTES

DATE: May 8, 2015

CONSTRUCTION DOCUMENTS

S002

© COPYRIGHT HAMMEL, GREEN AND ABRAHAMSON, INC.

7/9/2015 2:30:04 PM C:\Users\glandrewk\Documents\Revit Local Files\S15_3595001100_UlineConferenceCenter_glandrewk-PO6830.rvt

333 East Erie Street
Milwaukee, Wisconsin 53202
Telephone 414.278.8200

NOTES:
1. REFER TO GENERAL STRUCTURAL NOTES AT SHEETS S001 AND S002.
2. REFER TO TYPICAL CONCRETE DETAILS AT SHEET S500.
3. FOR DIMENSIONS NOT SHOWN ON STRUCTURAL PLAN (MASONRY WALLS, OPENINGS, ETC.) REFER TO ARCH.
4. VERIFY SIZE AND LOCATION OF CURBS, PITS, DEPRESSIONS, OPENINGS, SLEEVES, ETC. WITH RESPECTIVE CONTRACTORS.
5. REFER TO 1/S500 FOR SLAB ON GRADE AND MAT FOUNDATION INFORMATION.
6. VERIFY SIZE AND LOCATION OF EQUIPMENT PADS WITH EQUIPMENT SUPPLIER. REFER TO DETAIL 3/S500.
7. REFER TO S200-R FOR MAT SLAB REINFORCING.

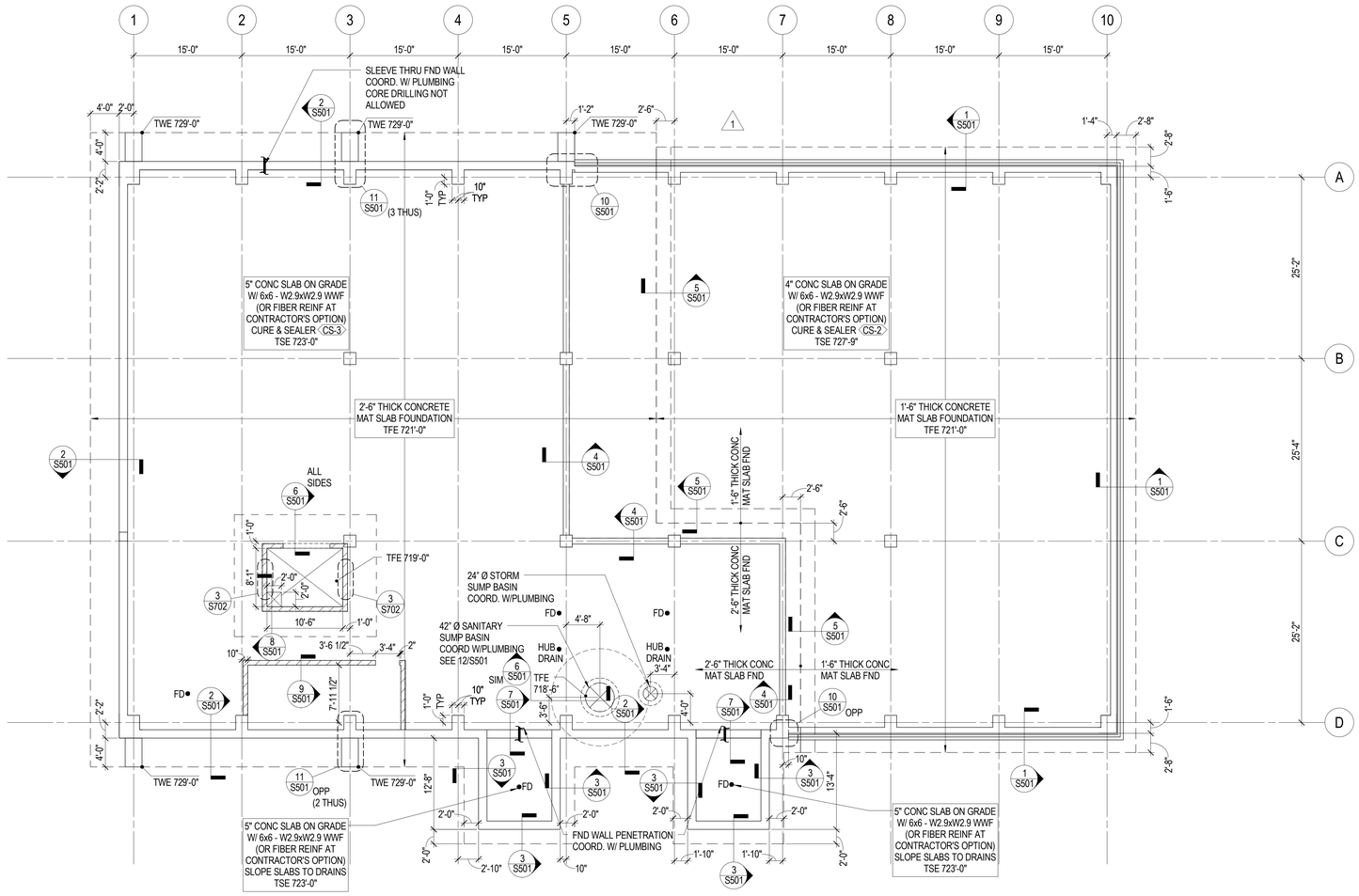

1 FOUNDATION PLAN
1/8" = 1'-0"

ULINE
12575 Uline Drive
Pleasant Prairie, WI 53158

ULINE
SHIPPING SUPPLY SPECIALISTS

NO	DESCRIPTION	DATE
	CP-1	5/8/2015
1	SI 1	6/12/2015
	CP-2	7/10/2015

ISSUANCE HISTORY - THIS SHEET

HGA NO: 3595-001-00

FOUNDATION PLAN

DATE: May 8, 2015

CONSTRUCTION DOCUMENTS

S200

© COPYRIGHT HAMMEL, GREEN AND ABRAHAMSON, INC.

7/9/2015 2:30:07 PM C:\Users\glandrewk\Documents\Revit Local Files\3515_359500100_UlineConferenceCenter_glandrewk-PC6600.rvt

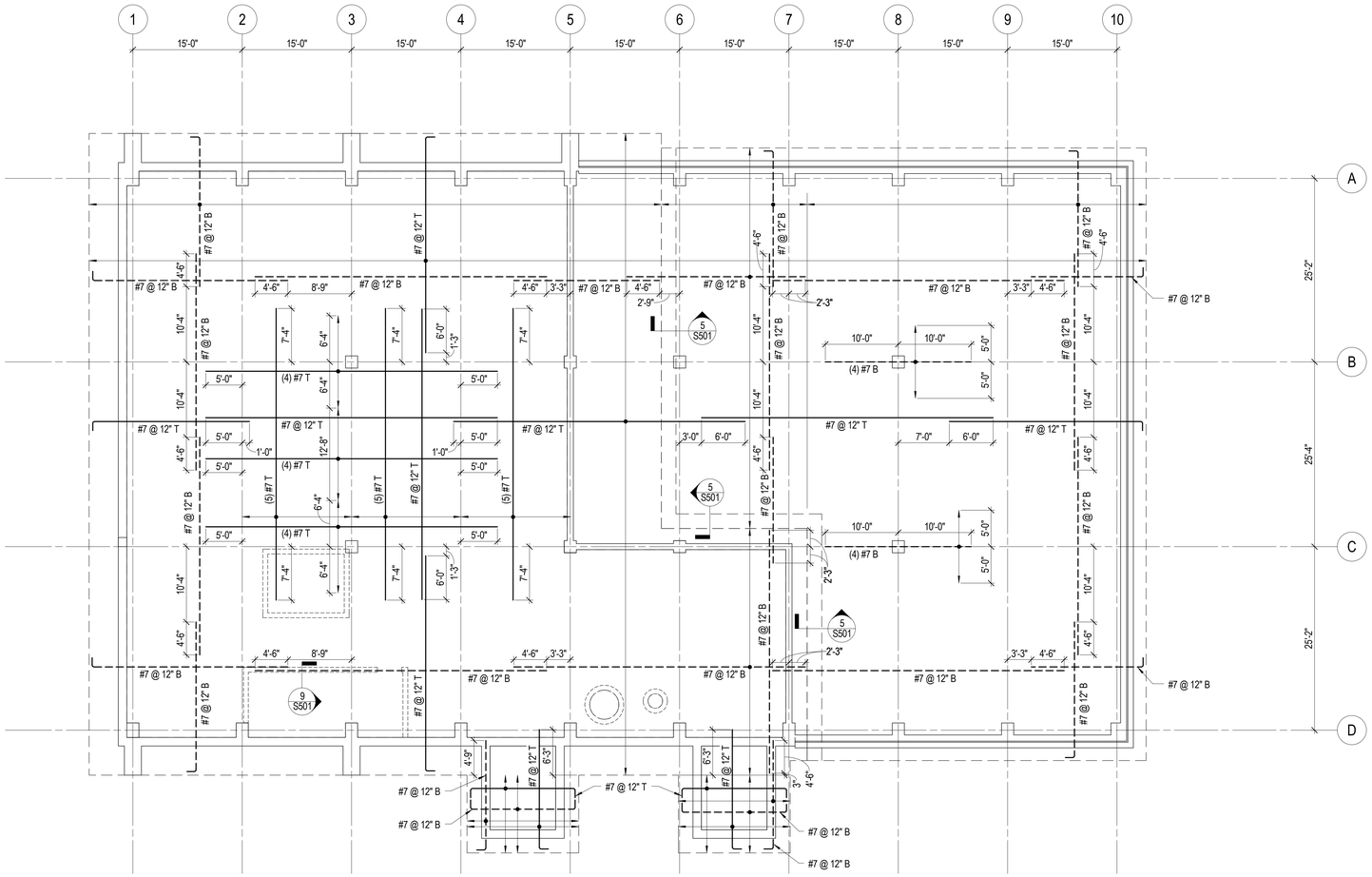

1 MAT SLAB REINFROCEMENT PLAN
1/8" = 1'-0"

NOTES:
1. REFER TO GENERAL STRUCTURAL NOTES AT SHEETS S001 AND S002.
2. REFER TO SHEET S200 FOR MAT DIMENSIONS AND DETAILING.
3. MAT SLAB REINFORCING DESIGNATIONS ARE AS FOLLOWS:
   - - - - - - BOTTOM REINFORCING
   ——— TOP REINFORCING
   "(4) #7 B" BARS DISTRIBUTED OVER WIDTH IN ADDITION TO UNIFORMLY SPACED REINFORCING.
4. MAT SLAB REINFORCEMENT PLACING SEQUENCE:
   1. BOTTOM REINF IN EAST-WEST DIRECTION
   2. BOTTOM REINF IN NORTH-SOUTH DIRECTION
   3. TOP REINF IN NORTH-SOUTH DIRECTION
   4. TOP REINF IN EAST-WEST DIRECTION

333 East Erie Street
Milwaukee, Wisconsin 53202
Telephone 414.278.8200

ULINE
12575 Uline Drive
Pleasant Prairie, WI 53158

ULINE
SHIPPING SUPPLY SPECIALISTS

NO	DESCRIPTION	DATE
	CP-1	5/8/2015
	CP-2	7/10/2015

ISSUANCE HISTORY - THIS SHEET

HGA NO: 3595-001-00

MAT SLAB REINFORCING PLAN

DATE: May 8, 2015

CONSTRUCTION DOCUMENTS

S200-R

© COPYRIGHT HAMMEL, GREEN AND ABRAHAMSON, INC.

7/9/2015 2:30:10 PM C:\Users\glandrewk\Documents\Revit Local Files\S15_359500100_UlineConferenceCenter_glandrewk-PO6830.rvt

333 East Erie Street
Milwaukee, Wisconsin 53202
Telephone 414.278.8200

NOTES:
1. REFER TO GENERAL STRUCTURAL NOTES AT SHEETS S001 AND S002.
2. REFER TO S400 SERIES DRAWINGS FOR COLUMN SCHEDULES, BEAM AND JOIST SCHEDULES AND TYPICAL DETAILS AS REQUIRED.
3. REFER TO TYPICAL ELEVATED CONCRETE DETAILS AT SHEET S510.
4. FOR DIMENSIONS NOT SHOWN ON STRUCTURAL PLANS (MASONRY WALLS, OPENINGS, ETC.), REFER TO ARCH.
5. VERIFY SIZE AND LOCATION OF CURBS, PADS, PITS, DEPRESSIONS, OPENINGS, SLEEVES, ETC. WITH RESPECTIVE CONTRACTORS.
6. SEE DETAIL 1/S400 FOR COLUMN TERMINATION AT BEAM DETAIL

CONCRETE FRAMING GEOMETRY NORTH OF GRID 8 (UNO)
TYPICAL PAN WIDTH = 66" (UNO)
TYPICAL JOIST WIDTH = 10"
TYPICAL PAN DEPTH = 20"
TYPICAL SLAB THICKNESS = 5"
TYPICAL STRUCTURAL DEPTH = 5"+20"=25"

CONCRETE FRAMING GEOMETRY SOUTH OF GRID 8 (UNO)
TYPICAL PAN WIDTH = 53"
TYPICAL JOIST WIDTH = 17" (SEE DETAIL 4/S510)
TYPICAL PAN DEPTH = 24"
TYPICAL SLAB THICKNESS = 5"
TYPICAL STRUCTURAL DEPTH = 5"+24"+10" (BEAM SOFFIT)=39"

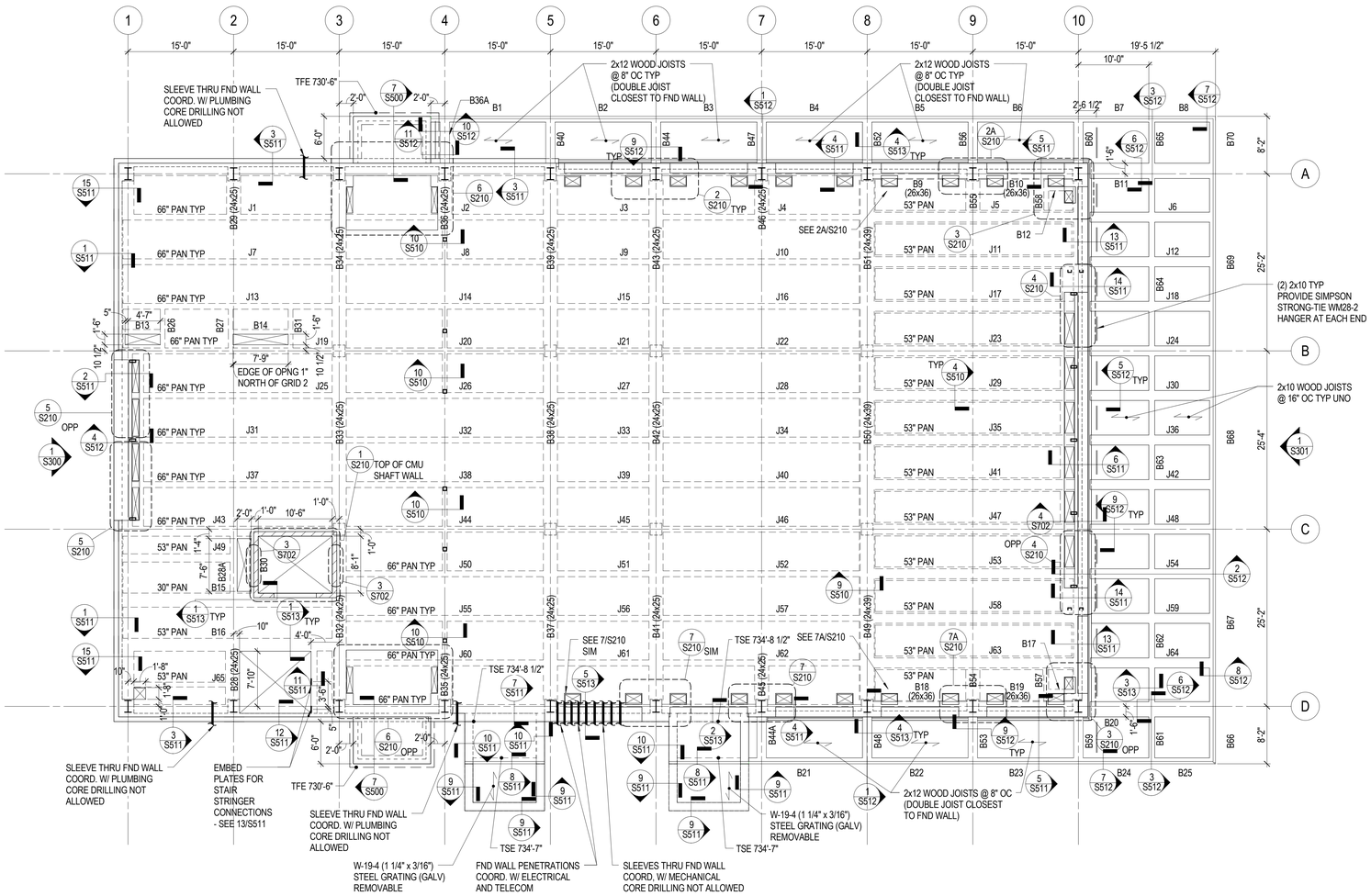

1 LEVEL 1 FRAMING PLAN
1/8" = 1'-0"

ULINE
12575 Uline Drive
Pleasant Prairie, WI 53158

ULINE
SHIPPING SUPPLY SPECIALISTS

NO	DESCRIPTION	DATE
	CP-1	5/8/2015
	CP-2	7/10/2015

ISSUANCE HISTORY - THIS SHEET

HGA NO: 3595-001-00

LEVEL 1 FRAMING PLAN

DATE: May 8, 2015

CONSTRUCTION DOCUMENTS

S201

© COPYRIGHT HAMMEL, GREEN AND ABRAHAMSON, INC.

C:\Users\gtandrew\Documents\Revit Local Files\S15_3595001100_UlineConferenceCenter_gtandrewk-PC6630.rvt
7/9/2015 2:30:13 PM

NOTES:
1. REFER TO GENERAL STRUCTURAL NOTES AT SHEETS S001 AND S002.
2. REFER TO TYPICAL STEEL DETAILS AT SHEET S700.
3. ⟋ INDICATES SPAN DIRECTION OF DECK.
4. VERIFY SIZE AND LOCATION OF OPENINGS WITH RESPECTIVE CONTRACTORS.
5. ROOF FRAMING SLOPES UNIFORMLY BETWEEN WORKING POINTS. REFER TO SECTIONS ON SHEETS S300 AND S301 FOR ROOF FRAMING WORKING POINTS.

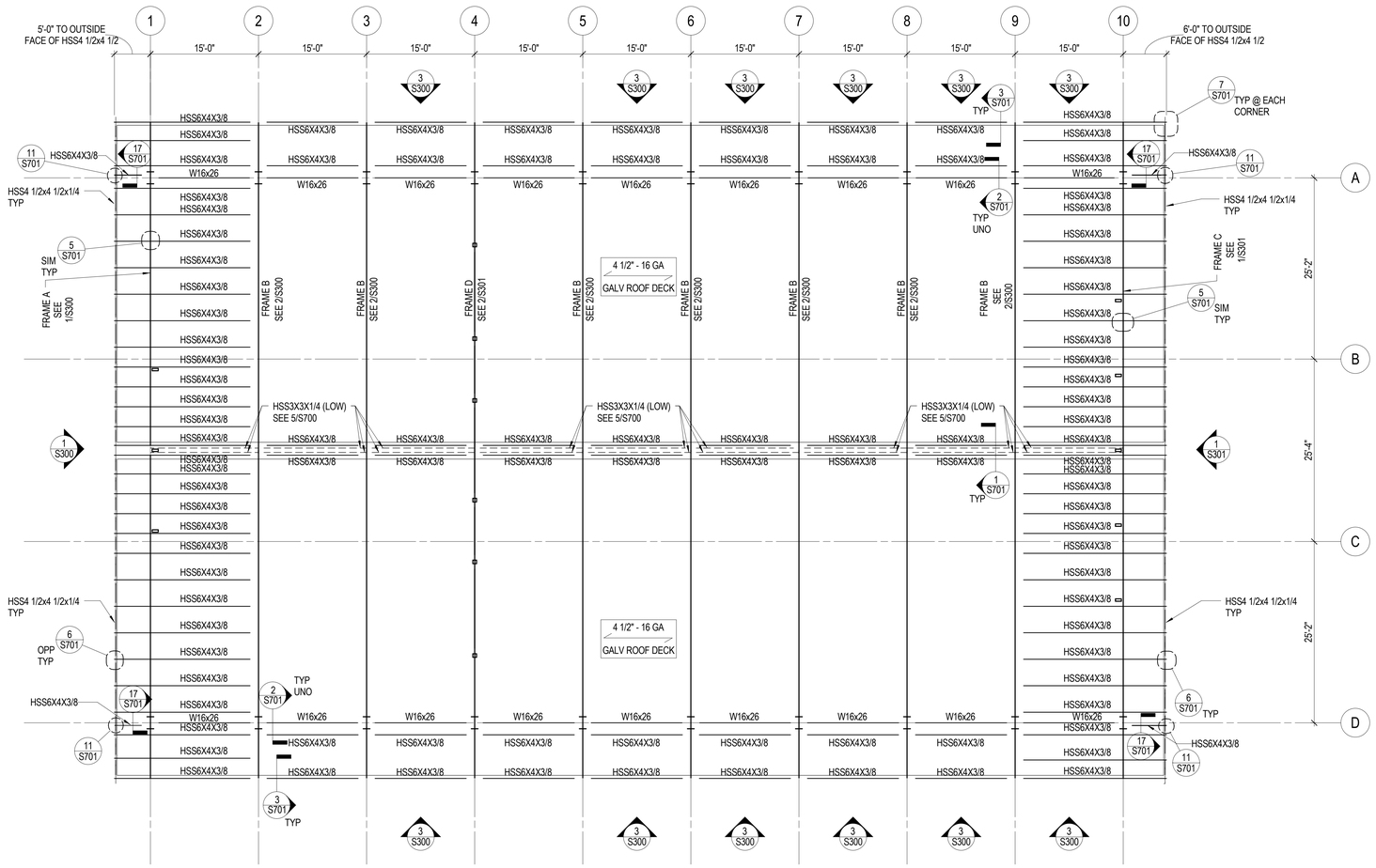

1 ROOF FRAMING PLAN
1/8" = 1'-0"

333 East Erie Street
Milwaukee, Wisconsin 53202
Telephone 414.278.8200

ULINE
12575 Uline Drive
Pleasant Prairie, WI 53158

ULINE
SHIPPING SUPPLY SPECIALISTS

NO	DESCRIPTION	DATE
	CP-2	7/10/2015

ISSUANCE HISTORY - THIS SHEET

HGA NO: 3595-001-00

ROOF FRAMING PLAN

DATE: May 8, 2015

CONSTRUCTION DOCUMENTS

S202

© COPYRIGHT HAMMEL, GREEN AND ABRAHAMSON, INC.

7/9/2015 2:30:15 PM C:\Users\glandrew\Documents\Revit Local Files\S15_3595001100_UlineConferenceCenter_glandrewk-PC6600.rvt

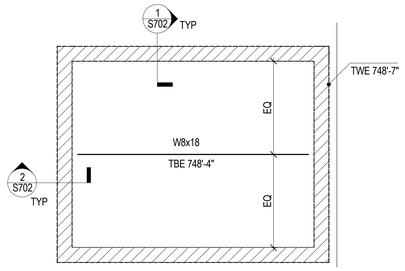

1 PARTIAL PLAN
3/8" = 1'-0"

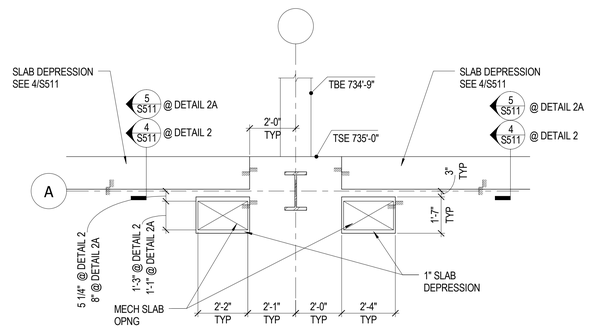

NOTES:
SEE 7/S510 FOR ADDITIONAL REINF AT SLAB OPENINGS

2 PARTIAL PLAN DETAIL
3/8" = 1'-0"

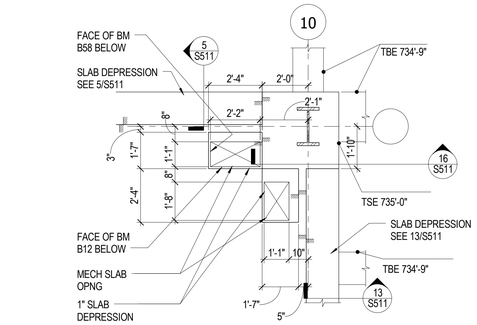

NOTE:
SEE 7/S510 FOR ADDITIONAL REINF AT SLAB OPENINGS

3 PARTIAL PLAN DETAIL
3/8" = 1'-0"

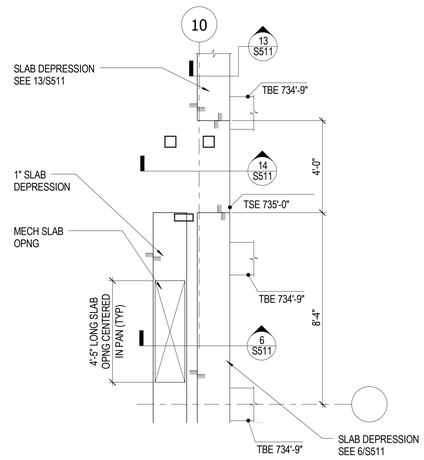

4 PARTIAL PLAN DETAIL
3/8" = 1'-0"

5 PARTIAL PLAN DETAIL
3/8" = 1'-0"

6 PARTIAL PLAN DETAIL
3/8" = 1'-0"

NOTE:
SEE 7/S510 FOR ADDITIONAL REINF AT SLAB OPENINGS

7 PARTIAL PLAN DETAIL
3/8" = 1'-0"

hga.
333 East Erie Street
Milwaukee, Wisconsin 53202
Telephone 414.278.8200

ULINE
12575 Uline Drive
Pleasant Prairie, WI 53158

ULINE
SHIPPING SUPPLY SPECIALISTS

NO	DESCRIPTION	DATE
	CP-2	7/10/2015

ISSUANCE HISTORY - THIS SHEET

HGA NO: 3595-001-00

PARTIAL PLANS

DATE: May 8, 2015

CONSTRUCTION DOCUMENTS

S210

© COPYRIGHT HAMMEL, GREEN AND ABRAHAMSON, INC.

C:\Users\glandrewk\Documents\Revit Local Files\S15_3595001100_UlineConferenceCenter_glandrewk-PC6630.rvt
7/9/2015 2:30:18 PM

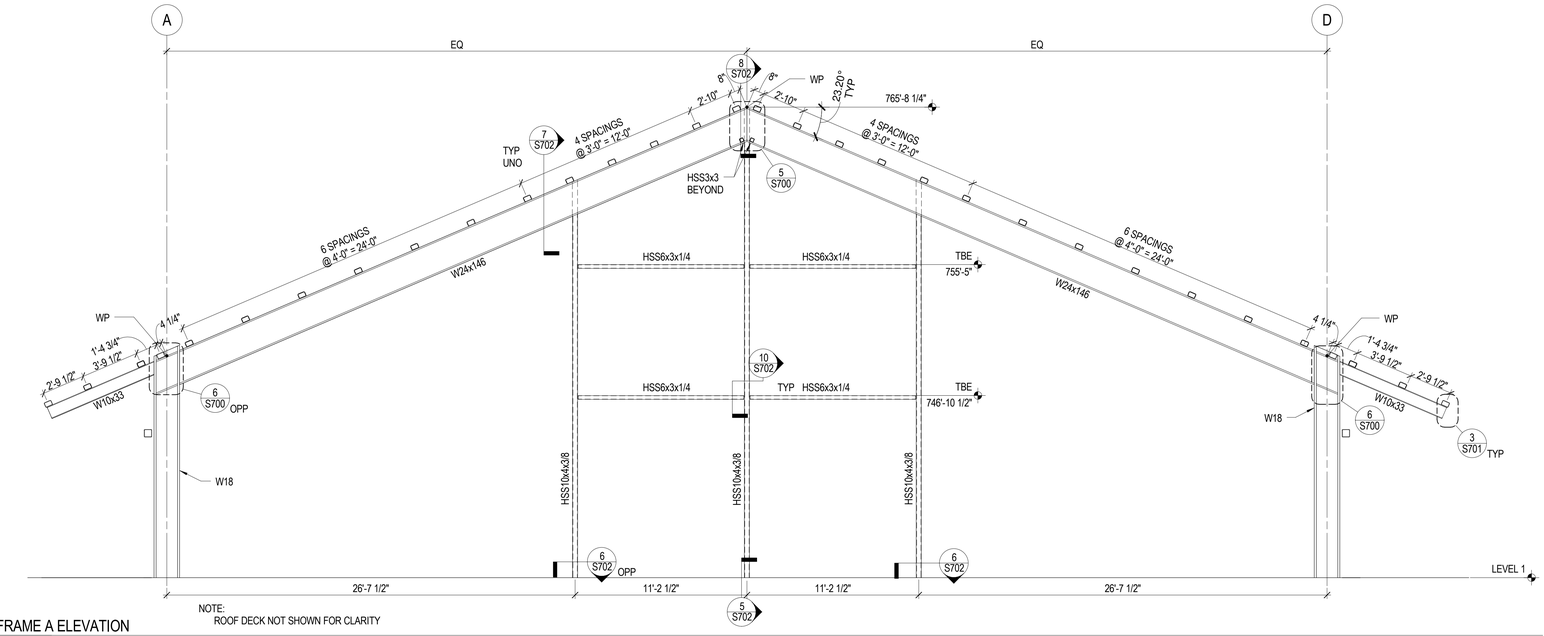

NOTE:
ROOF DECK NOT SHOWN FOR CLARITY

1 FRAME A ELEVATION
1/4" = 1'-0"

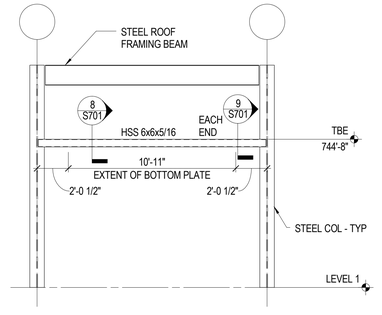

3 ELEVATION
1/4" = 1'-0"

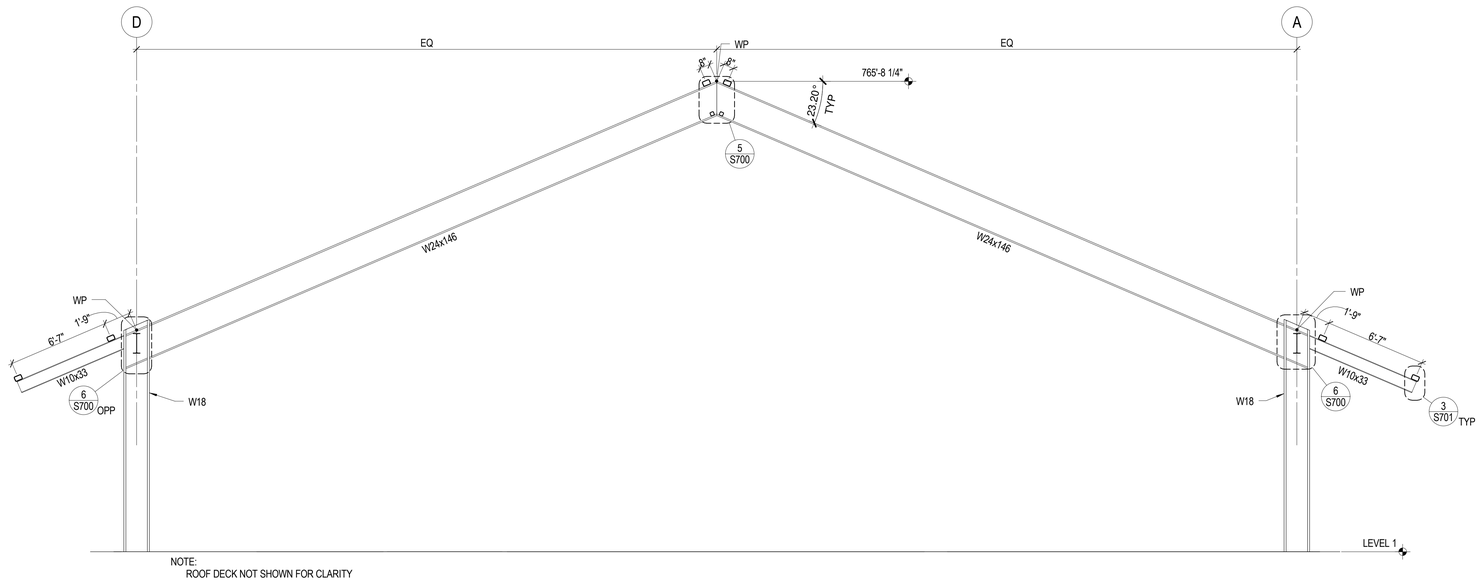

NOTE:
ROOF DECK NOT SHOWN FOR CLARITY

2 FRAME B ELEVATION
1/4" = 1'-0"

333 East Erie Street
Milwaukee, Wisconsin 53202
Telephone 414.278.8200

ULINE
12575 Uline Drive
Pleasant Prairie, WI 53158

ULINE
SHIPPING SUPPLY SPECIALISTS

NO	DESCRIPTION	DATE
	CP-2	7/10/2015

ISSUANCE HISTORY - THIS SHEET

HGA NO: 3595-001-00

FRAME ELEVATIONS

DATE: May 8, 2015

CONSTRUCTION DOCUMENTS

S300

© COPYRIGHT HAMMEL, GREEN AND ABRAHAMSON, INC.

C:\Users\jlandrew\Documents\Revit Local Files\S15_3595001100_UlineConferenceCenter_jlandrew_PO6830.rvt
7/9/2015 2:30:20 PM

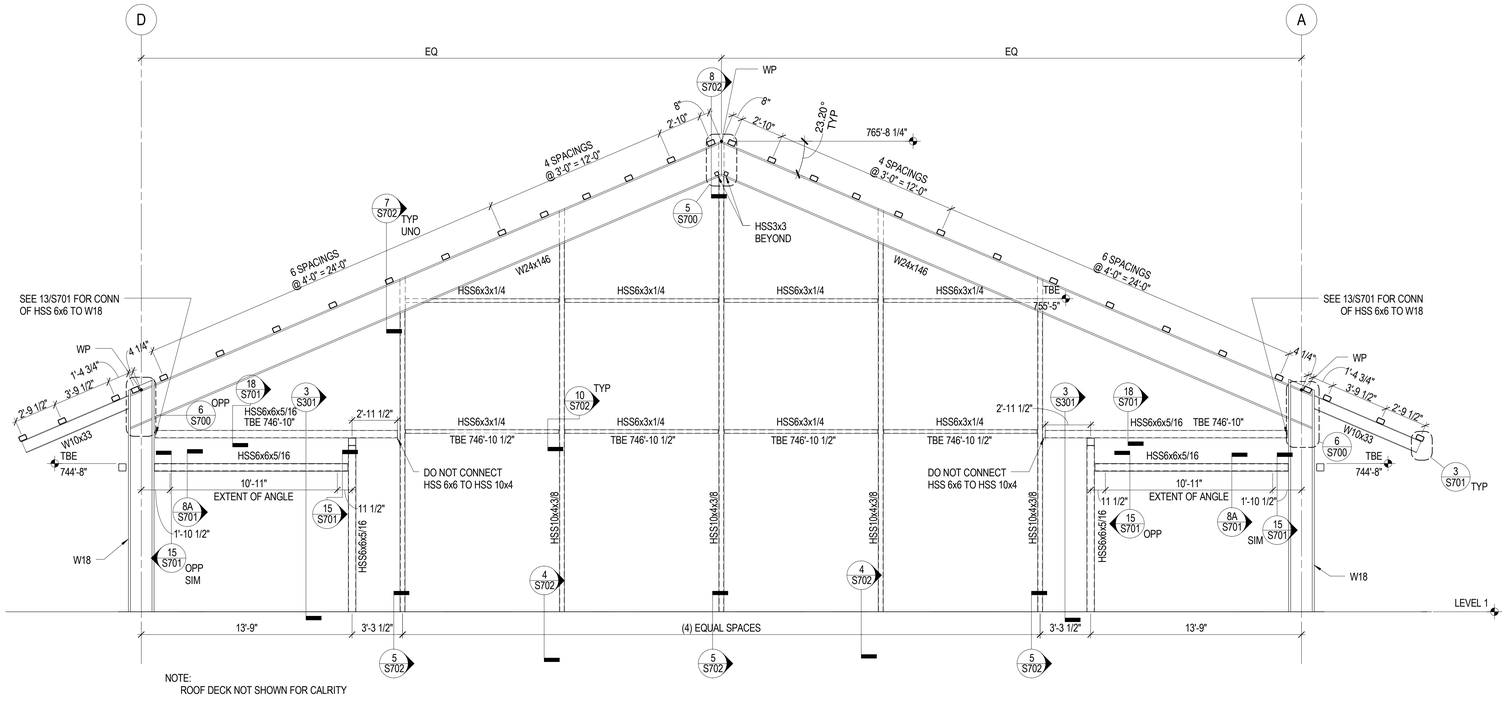

1 FRAME C ELEVATION
1/4" = 1'-0"

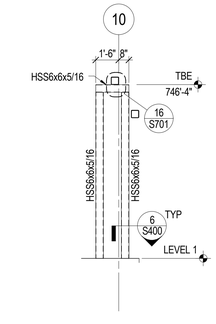

3 ELEVATION
1/4" = 1'-0"

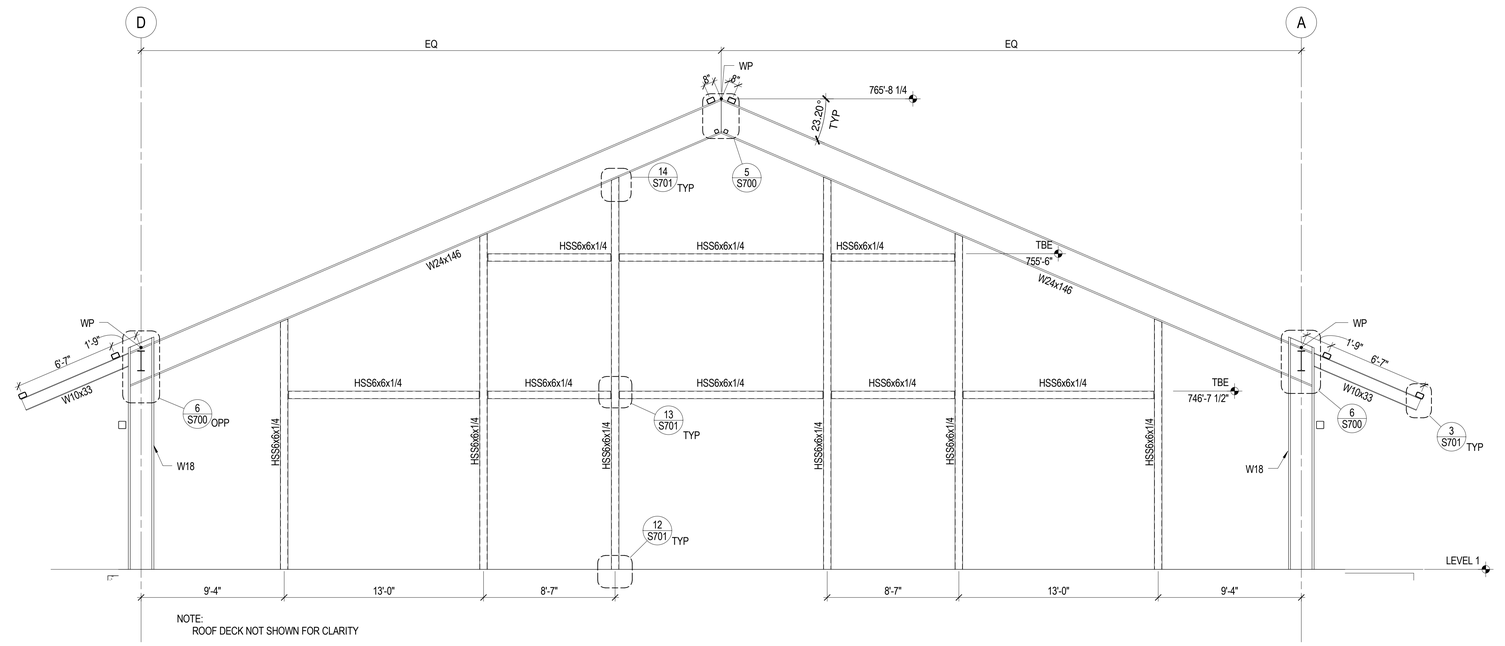

2 FRAME D ELEVATION
1/4" = 1'-0"

333 East Erie Street
Milwaukee, Wisconsin 53202
Telephone 414.278.8200

ULINE
12575 Uline Drive
Pleasant Prairie, WI 53158

ULINE
SHIPPING SUPPLY SPECIALISTS

NO	DESCRIPTION	DATE
	CP-2	7/10/2015

ISSUANCE HISTORY - THIS SHEET

HGA NO: 3595-001-00

FRAME ELEVATIONS

DATE: May 8, 2015

CONSTRUCTION DOCUMENTS

S301

© COPYRIGHT HAMMEL, GREEN AND ABRAHAMSON, INC.

C:\Users\glandrew\Documents\Revit Local Files\S15_3595001100_UlineConferenceCenter_glandrew_PO6830.rvt
7/9/2015 2:30:22 PM

STEEL/CONCRETE COLUMN SCHEDULE

		W18x175	W18x175	W18x175	W18x175	W18x175	W18x175	W18x175	W18x175	W18x175	W18x175									W18x175	W18x175	
LEVEL 01																						LEVEL 01
735'-0"	SIZE	24" x 20"	24" x 20"	24" x 20"	24" x 20"	24" x 20"	24" x 20"	24" x 20"	24" x 20"	24" x 20"	24" x 20"	20" x 20"	20" x 20"	20" x 20"	20" x 20"	20" x 20"	20" x 20"	20" x 20"	20" x 20"	24" x 20"	24" x 20"	735'-0"
	VERTS	10 - #8	10 - #8	10 - #8	10 - #8	10 - #8	10 - #8	10 - #8	10 - #8	10 - #8	10 - #8	8 - #8	8 - #8	8 - #8	8 - #8	8 - #8	8 - #8	8 - #8	8 - #8	10 - #8	10 - #8	
	TIES	#4@12"	#4@12"	#4@12"	#4@12"	#4@12"	#4@12"	#4@12"	#4@12"	#4@12"	#4@12"	#4@12"	#4@12"	#4@12"	#4@12"	#4@12"	#4@12"	#4@12"	#4@12"	#4@12"	#4@12"	
	DETAIL	2B/S400	2B/S400	2B/S400	2B/S400	2B/S400	2B/S400	2B/S400	2B/S400	2B/S400	2B/S400	2A/S400	2A/S400	2A/S400	2A/S400	2A/S400	2A/S400	2A/S400	2A/S400	2B/S400	2B/S400	
FOUNDATION																						FOUNDATION
721'-0"																						721'-0"
COLUMN LOCATIONS		A-1	A-2	A-3	A-4	A-5	A-6	A-7	A-8	A-9	A-10	B-3	B-5	B-6	B-8	C-3	C-5	C-6	C-8	D-1	D-2	
BOT OF BASE PL ELEV		735'-1 1/2"	735'-1 1/2"	735'-1 1/2"	735'-1 1/2"	735'-1 1/2"	735'-1 1/2"	735'-1 1/2"	735'-1 1/2"	735'-1 1/2"	735'-1 1/2"									735'-1 1/2"	735'-1 1/2"	BOT OF BASE PL ELEV
BASE PL SIZE (A x B)		16" x 22"	16" x 22"	16" x 22"	16" x 22"	16" x 22"	16" x 22"	16" x 22"	16" x 22"	16" x 22"	16" x 22"									16" x 22"	16" x 22"	BASE PL SIZE (A x B)
BASE PL THICKNESS		1 1/4"	1 1/4"	1 1/4"	1 1/4"	1 1/4"	1 1/4"	1 1/4"	1 1/4"	1 1/4"	1 1/4"									1 1/4"	1 1/4"	BASE PL THICKNESS
ANCHOR RODS		(4) 1" Ø	(4) 1' Ø	(4) 1" Ø	(4) 1" Ø	(4) 1" Ø	(4) 1" Ø	(4) 1" Ø	(4) 1" Ø	(4) 1" Ø	(4) 1" Ø									(4) 1" Ø	(4) 1" Ø	ANCHOR RODS
DETAIL		4/S400	4/S400	4/S400	4/S400	4/S400	4/S400	4/S400	4/S400	4/S400	4/S400									4/S400	4/S400	DETAIL
REMARKS		SEE 5/S400 FOR REINF AT ANCHOR RODS	SEE 5/S400 FOR REINF AT ANCHOR RODS	SEE 5/S400 FOR REINF AT ANCHOR RODS	SEE 5/S400 FOR REINF AT ANCHOR RODS	SEE 5/S400 FOR REINF AT ANCHOR RODS	SEE 5/S400 FOR REINF AT ANCHOR RODS	SEE 5/S400 FOR REINF AT ANCHOR RODS	SEE 5/S400 FOR REINF AT ANCHOR RODS	SEE 5/S400 FOR REINF AT ANCHOR RODS	SEE 5/S400 FOR REINF AT ANCHOR RODS									SEE 5/S400 FOR REINF AT ANCHOR RODS	SEE 5/S400 FOR REINF AT ANCHOR RODS	REMARKS

STEEL/CONCRETE COLUMN SCHEDULE

		W18x175	W18x175	W18x175	W18x175	W18x175	W18x175	W18x175	W18x175
LEVEL 01									LEVEL 01
735'-0"	SIZE	24" x 20"	24" x 20"	24" x 20"	24" x 20"	24" x 20"	24" x 20"	24" x 20"	24" x 20"	735'-0"
	VERTS	10 - #8	10 - #8	10 - #8	10 - #8	10 - #8	10 - #8	10 - #8	10 - #8	
	TIES	#4@12"	#4@12"	#4@12"	#4@12"	#4@12"	#4@12"	#4@12"	#4@12"	
	DETAIL	2B/S400	2B/S400	2B/S400	2B/S400	2B/S400	2B/S400	2B/S400	2B/S400	
FOUNDATION										FOUNDATION
721'-0"										721'-0"
COLUMN LOCATIONS		D-3	D-4	D-5	D-6	D-7	D-8	D-9	D-10	
BOT OF BASE PL ELEV		735'-1 1/2"	735'-1 1/2"	735'-1 1/2"	735'-1 1/2"	735'-1 1/2"	735'-1 1/2"	735'-1 1/2"	735'-1 1/2"	BOT OF BASE PL ELEV
BASE PL SIZE (A x B)		16" x 22"	16" x 22"	16" x 22"	16" x 22"	16" x 22"	16" x 22"	16" x 22"	16" x 22"	BASE PL SIZE (A x B)
BASE PL THICKNESS		1 1/4"	1 1/4"	1 1/4"	1 1/4"	1 1/4"	1 1/4"	1 1/4"	1 1/4"	BASE PL THICKNESS
ANCHOR RODS		(4) 1" Ø	(4) 1" Ø	(4) 1" Ø	(4) 1" Ø	(4) 1" Ø	(4) 1" Ø	(4) 1" Ø	(4) 1" Ø	ANCHOR RODS
DETAIL		4/S400	4/S400	4/S400	4/S400	4/S400	4/S400	4/S400	4/S400	DETAIL
REMARKS		SEE 5/S400 FOR REINF AT ANCHOR RODS	SEE 5/S400 FOR REINF AT ANCHOR RODS	SEE 5/S400 FOR REINF AT ANCHOR RODS	SEE 5/S400 FOR REINF AT ANCHOR RODS	SEE 5/S400 FOR REINF AT ANCHOR RODS	SEE 5/S400 FOR REINF AT ANCHOR RODS	SEE 5/S400 FOR REINF AT ANCHOR RODS	SEE 5/S400 FOR REINF AT ANCHOR RODS	REMARKS

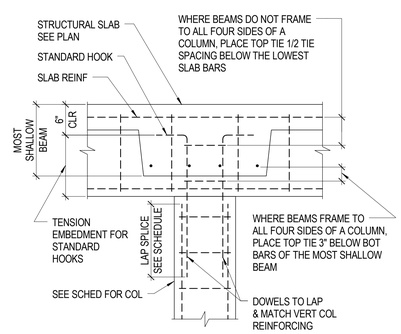

1 COLUMN TERMINATION AT BEAM
NTS

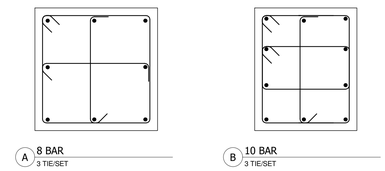

NOTES:
1. SEE SCHEDULE FOR TIE SIZES & SPACINGS.
2. AT SINGLE TIE LEGS, ALTERNATE LOCATIONS OF 135° HOOKED ENDS.

2 TYPICAL COLUMN TYPES
NTS

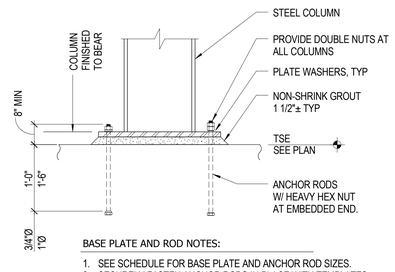

BASE PLATE AND ROD NOTES:
1. SEE SCHEDULE FOR BASE PLATE AND ANCHOR ROD SIZES.
2. SECURELY FASTEN ANCHOR RODS IN PLACE WITH TEMPLATES OR OTHER MEANS PRIOR TO CONCRETE PLACEMENT. INSERTION INTO CONCRETE AFTER CASTING IS PROHIBITED.

BASE PLATE HOLE AND PLATE WASHER REQUIREMENTS		
ANCHOR ROD DIAMETER	HOLE DIAMETER	PLATE WASHER SIZE
3/4"	1 5/16"	1/4"x2"x2"
1"	1 13/16"	3/8"x3"x3"

3 ANCHOR ROD DETAIL
1" = 1'-0"

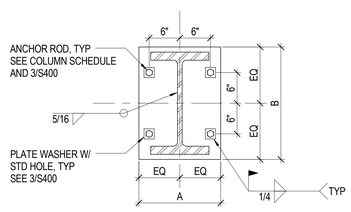

4 DETAIL
1" = 1'-0"

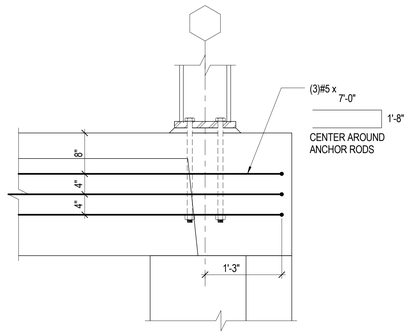

5 REINF AT ANCHOR RODS
1" = 1'-0"

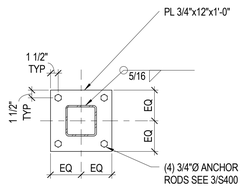

6 DETAIL
1" = 1'-0"

hga.
333 East Erie Street
Milwaukee, Wisconsin 53202
Telephone 414.278.8200

ULINE
12575 Uline Drive
Pleasant Prairie, WI 53158

ULINE
SHIPPING SUPPLY SPECIALISTS

NO	DESCRIPTION	DATE
	CP-1	5/8/2015
	CP-2	7/10/2015

ISSUANCE HISTORY - THIS SHEET

HGA NO: 3595-001-00

COLUMN SCHEDULE

DATE: May 8, 2015

CONSTRUCTION DOCUMENTS

S400

© COPYRIGHT HAMMEL, GREEN AND ABRAHAMSON, INC.

C:\Users\gtandrewk\Documents\Revit Local Files\15_3595001\00_UlineConferenceCenter_gtandrewk-PC6600.rvt
7/9/2015 2:09:25 PM

CONCRETE JOIST SCHEDULE

BEAM MARK	WIDTH X DEPTH (IN INCHES)	REINFORCING NUMBER & SIZE	LOCATION	NORTH OR WEST / CENTERLINE OF SUPPORTS / SOUTH OR EAST	#4 STIRRUPS SPACING FROM ENDS N OR W	#4 STIRRUPS SPACING FROM ENDS S OR E	#4 STIRRUPS TYPE	REMARKS
J1	10x25	3-#7	T	10'-0"	ALL @ 9"		E	
		3-#9	T					
		1-#10	B					
		1-#10	B					
J2	10x25	3-#9	T	13'-0" 13'-0"	ALL @ 9"		E	SEE 11B/S510 FOR REINF @ SLAB DEPRESSION
		2-#7	T					
		1-#9	B					
		1-#9	B					
J3	10x25	3-#9	T	13'-0" 13'-0"	ALL @ 9"		E	
		1-#7	B					
		1-#7	B					
J4	10x25	2-#7	T		ALL @ 9"		E	
		1-#9	B					
		1-#9	B					
J5	17x39	3-#7	T	13'-0" 13'-0"	10 @ 15"	10 @ 15"	C	SEE 4/S510
		2-#5	T	13'-0"				1/2 EA FACE
		2-#5	T	15'-0"				1/2 EA FACE
		6-#5	I					1/2 EA FACE
		1-#7	B					
		2-#7	B					
J6	17x36/15	4-#9 *	T	24'-0"	ALL @ 12" *		A	SEE 2/S512 FOR BM TAPER PROFILE
		4-#5 *	I					1/2 EA FACE
		1-#7 *	B					
		2-#7 *	B					
J7	10x25	2-#7	T	10'-0"	ALL @ 9"		E	
		2-#7	T					
		1-#10	B					
		1-#10	B					
J8	10x25	3-#9	T	13'-0" 13'-0"	ALL @ 9"		E	
		1-#9	B					
		1-#9	B					
J9	10x25	3-#7	T	13'-0" 13'-0"	ALL @ 9"		E	
		1-#7	B					
		1-#7	B					
J10	10x25	1-#9	B		ALL @ 9"		E	
		1-#9	B					
J11	17x39	3-#7	T	13'-0" 13'-0"	10 @ 15"	10 @ 15"	C	SEE 4/S510
		2-#5	T	13'-0"				1/2 EA FACE
		2-#5	T	15'-0"				1/2 EA FACE
		6-#5	I					1/2 EA FACE
		1-#7	B					
		2-#7	B					
J12	17x36/15	4-#9 *	T	24'-0"	ALL @ 12" *		A	SEE 2/S512 FOR BM TAPER PROFILE
		4-#5 *	I					1/2 EA FACE
		1-#7 *	B					
		2-#7 *	B					
J13	10x25			SAME REINFORCING AS J7				
J14	10x25			SAME REINFORCING AS J8				
J15	10x25			SAME REINFORCING AS J9				
J16	10x25			SAME REINFORCING AS J10				
J17	17x39			SAME REINFORCING AS J11				SEE 4/S510
J18	17x36/15			SAME REINFORCING AS J12				SEE 2/S512 FOR BM TAPER PROFILE
J19	10x25	2-#7	T	10'-0"	ALL @ 9"		E	
		2-#7	T					
		2-#10	B					
J20	10x25	3-#9	T	13'-0" 13'-0"	ALL @ 9"		E	
		2-#9	B					
J21	10x25	3-#7	T	13'-0" 13'-0"	ALL @ 9"		E	
		2-#7	B					
J22	10x25	2-#9	B		ALL @ 9"		E	
J23	17x39			SAME REINFORCING AS J11				SEE 4/S510
J24	17x36/15			SAME REINFORCING AS J12				SEE 2/S512 FOR BM TAPER PROFILE
J25	10x25	2-#7	T	10'-0"				SEE 4/S512
		2-#5	T	6'-0"				
		1-#10	B					
		1-#10	B					

CONCRETE JOIST SCHEDULE

BEAM MARK	WIDTH X DEPTH (IN INCHES)	REINFORCING NUMBER & SIZE	LOCATION	NORTH OR WEST / CENTERLINE OF SUPPORTS / SOUTH OR EAST	#4 STIRRUPS SPACING FROM ENDS N OR W	#4 STIRRUPS SPACING FROM ENDS S OR E	#4 STIRRUPS TYPE	REMARKS
J26	10x25			SAME REINFORCING AS J8				
J27	10x25			SAME REINFORCING AS J9				
J28	10x25			SAME REINFORCING AS J10				
J29	17x39			SAME REINFORCING AS J11				SEE 4/S510
J30	17x36/15			SAME REINFORCING AS J12				SEE 2/S512 FOR BM TAPER PROFILE
J31	10x25			SAME REINFORCING AS J25				SEE 4/S512
J32	10x25			SAME REINFORCING AS J8				
J33	10x25			SAME REINFORCING AS J9				
J34	10x25			SAME REINFORCING AS J10				
J35	17x39			SAME REINFORCING AS J11				SEE 4/S510
J36	17x36/15			SAME REINFORCING AS J12				SEE 2/S512 FOR BM TAPER PROFILE
J37	10x25			SAME REINFORCING AS J25				SEE 4/S512
J38	10x25			SAME REINFORCING AS J8				
J39	10x25			SAME REINFORCING AS J9				
J40	10x25			SAME REINFORCING AS J10				
J41	17x39			SAME REINFORCING AS J11				SEE 4/S510
J42	17x36/15			SAME REINFORCING AS J12				SEE 2/S512 FOR BM TAPER PROFILE
J43	17x25	3-#9	T	20'-0"	ALL @ 9"		A	
		1-#9	T	12'-0"				WEST FACE
		2-#10	B					
		2-#10	B					WEST FACE
J44	10x25	3-#9	T	20'-0" 13'-0"	ALL @ 9"		E	
		2-#10	B					
J45	10x25	3-#9	T	13'-0" 13'-0"	ALL @ 9"		E	
		2-#7	B					
J46	10x25			SAME REINFORCING AS J22				
J46	10x25			SAME REINFORCING AS J22				
J48	17x36/15			SAME REINFORCING AS J12				SEE 2/S512 FOR BM TAPER PROFILE
J49	14x25	3-#7	T		ALL @ 9"		A	
		3-#7	B					WEST FACE
J50	10x25	2-#7	T	10'-0"	ALL @ 9"		E	
		2-#7	T					
		1-#10	B					
		1-#10	B					
J51	10x25			SAME REINFORCING AS J9				
J52	10x25			SAME REINFORCING AS J10				
J53	17x39			SAME REINFORCING AS J11				SEE 4/S510
J54	17x36/15			SAME REINFORCING AS J12				SEE 2/S512 FOR BM TAPER PROFILE
J55	10x25			SAME REINFORCING AS J50				
J56	10x25			SAME REINFORCING AS J9				
J57	10x25			SAME REINFORCING AS J10				
J58	17x39			SAME REINFORCING AS J11				SEE 4/S510
J59	17x36/15			SAME REINFORCING AS J12				SEE 2/S512 FOR BM TAPER PROFILE
J60	10x25	3-#7	T	13'-0"	ALL @ 9"		E	SEE 11B/S511 FOR REINF @ SLAB DEPRESSION
		3-#9	T					
		1-#10	B					
		1-#10	B					
J61	10x25			SAME REINFORCING AS J3				
J62	10x25			SAME REINFORCING AS J4				
J63	17x39			SAME REINFORCING AS J5				SEE 4/S510
J64	17x36/15			SAME REINFORCING AS J6				SEE 2/S512 FOR BM TAPER PROFILE
J65	8x25	2-#5	T	7'-6"	8 @ 9"	8 @ 9"	E	
		2-#5	T	7'-6"				
		1-#7	B					
		1-#7	B					

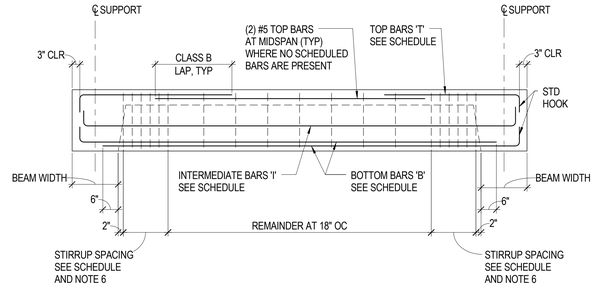

1 TYPICAL SINGLE SPAN CONCRETE JOIST REINFORCEMENT
1/2" = 1'-0"

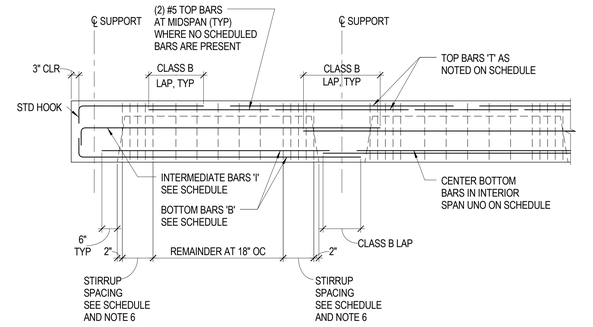

2 TYPICAL MULTI SPAN CONCRETE JOIST REINFORCEMENT
1/2" = 1'-0"

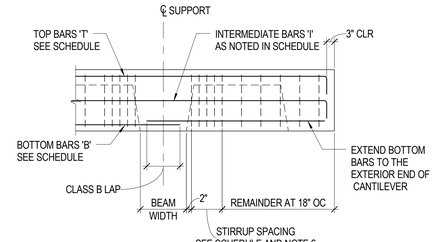

3 TYPICAL CANTILEVER JOIST REINFORCEMENT
1/2" = 1'-0"

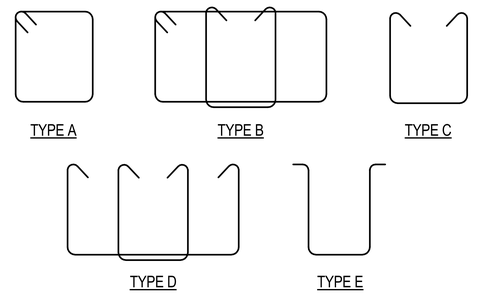

NOTE: PROVIDE 135° HOOKS AT ENDS OF ALL STIRRUPS EXCEPT AT TYPE E STIRRUPS

4 STIRRUP TYPES
NTS

TYPICAL JOIST SCHEDULE NOTES:
1. ALL JOISTS SHALL BE CENTERED ON GRID UNO.
2. SEE JOIST SCHEDULES AND JOIST ELEVATIONS FOR REINFORCING BAR LENGTHS.
3. ALL REINFORCING LAP SPLICES SHALL BE CLASS B LAPS, UNO.
4. SEE S510 FOR TYPICAL CONCRETE JOIST DETAILS. TYPICAL DETAILS APPLY UNLESS SPECIFICALLY NOTED OTHERWISE ON PLANS, SCHEDULES OR DETAILS.
5. SLEEVES ARE NOT ALLOWED THRU JOISTS.
6. STIRRUPS IN 'STIRRUP SPACING COLUMN' SHALL BE AS FOLLOWS:
   10@15" INDICATES 10 STIRRUPS SPACED AT 15" OC.
   ALL@12" INDICATES STIRRUPS AT 12" OC ALONG ENTIRE LENGTH OF JOIST
   SEE DETAIL 4/S410 FOR STIRRUP TYPES
7. "*" INDICATES EPOXY COATED REINFORCING

hga.
333 East Erie Street
Milwaukee, Wisconsin 53202
Telephone 414.278.8200

ULINE
12575 Uline Drive
Pleasant Prairie, WI 53158

ULINE
SHIPPING SUPPLY SPECIALISTS

NO	DESCRIPTION	DATE
	CP-2	7/10/2015

ISSUANCE HISTORY - THIS SHEET

HGA NO: 3595-001-00

CONCRETE JOIST SCHEDULES AND DETAILS

DATE: May 8, 2015

CONSTRUCTION DOCUMENTS

S410

© COPYRIGHT HAMMEL, GREEN AND ABRAHAMSON, INC.

7/9/2015 2:30:28 PM C:\Users\glandrewk\Documents\Revit Local Files\S15_3595001100_UlineConferenceCenter_glandrewk-PC6600.rvt

CONCRETE BEAM SCHEDULE

BEAM MARK	WIDTH X DEPTH (IN INCHES)	REINFORCING NUMBER & SIZE	LOCATION	NORTH OR WEST / CENTERLINE OF SUPPORTS / SOUTH OR EAST	#4 STIRRUPS SPACING FROM ENDS N OR W	#4 STIRRUPS SPACING FROM ENDS S OR E	#4 STIRRUPS TYPE	REMARKS
B1	10x15	2-#5 *	T	10'-0"	ALL @ 6" *		A	
		2-#5 *	B					
B2	10x15	2-#5 *	T	10'-0" 10'-0"	ALL @ 6" *		A	
		2-#5 *	B					
B3	10x15			SAME REINFORCING AS B2				
B4	10x15			SAME REINFORCING AS B2				
B5	10x15			SAME REINFORCING AS B2				
B6	10x15			SAME REINFORCING AS B2				
B7	10x15	2-#6 *	T	10'-0" 10'-0"	ALL @ 6" *		A	
		2-#5 *	B					
B8	10x15	2-#5 *	T	5'-6"	ALL @ 6" *		A	
		2-#5 *	B					
B9	26x36	3-#7	T	7'-6"	ALL @ 15"		B	SEE 5/S511
		4-#5	I					1/2 EA FACE
		5-#7	B					
B10	26x36	5-#9	T	5'-0" 13'-0"	ALL @ 15"		B	SEE 5/S511
		4-#5	I					1/2 EA FACE
		3-#7	B					
		2-#7	B					
B11	26x36/15	5-#9 *	T	10'-0"	ALL @ 12" *		B	SEE 2/S512 FOR BM TAPER PROFILE
		5-#9 *	T	10'-0"				LOWER LAYER OF REINF
		4-#5 *	I					1/2 EA FACE
		3-#7 *	B					
		2-#7 *	B					
B12	8x25	2-#5	T		ALL @ 12"			HOLD TOP REINF DOWN 1" @ SLAB DEPRESSION
		2-#5	B					
B13	8x25	2-#5	T		ALL @ 12"		A	
		2-#5	B					
B14	8x25	2-#5	T		ALL @ 12"		A	
		2-#5	B					
B15	24x25	5-#9	T	12'-0"	ALL @ 9"		A	
		5-#9	T					
		5-#9	T	12'-0"				
		3-#10	B					
		3-#10	B					
B16	22x25	5-#9	T	12'-0"	ALL @ 9"		A	
		5-#9	T					
		5-#9	T					
		3-#10	B					
		2-#10	B					
B17	8x25			SAME REINFORCING AS B12				
B18	26x36			SAME REINFORCING AS B9				SEE 5/S511
B19	26x36			SAME REINFORCING AS B10				SEE 5/S511
B20	26x36/15			SAME REINFORCING AS B11				SEE 2/S512 FOR BM TAPER PROFILE
B21	10x15	2-#5 *	T	10'-0"	ALL @ 6" *		A	
		2-#5 *	B					
B22	10x15			SAME REINFORCING AS B2				
B23	10x15			SAME REINFORCING AS B2				
B24	10x15			SAME REINFORCING AS B7				
B25	10x15			SAME REINFORCING AS B8				
B26	8x25	2-#5	T		ALL @ 12"		A	
		2-#5	B					
B27	8x25			SAME REINFORCING AS B26				
B28	24x25	3-#7	T		ALL @ 12"		A	
		3-#7	B					
B28A	12x25	3-#5	T		ALL @ 9"		A	
		3-#7	B					
B29	24x25	3-#7	T		ALL @ 12"		A	
		3-#7	B					
B30	12x25			SAME REINFORCING AS B28A				
B31	8x25			SAME REINFORCING AS B26				
B32	24x25	6-#9	T	10'-0"	ALL @ 9"		B	
		6-#9	T					
		4-#10	B					
		3-#10	B					
B33	24x25	6-#10	T	12'-0" 12'-0"	ALL @ 9"		D	
		3-#10	B					
		3-#10	B					

CONCRETE BEAM SCHEDULE

BEAM MARK	WIDTH X DEPTH (IN INCHES)	REINFORCING NUMBER & SIZE	LOCATION	NORTH OR WEST / CENTERLINE OF SUPPORTS / SOUTH OR EAST	#4 STIRRUPS SPACING FROM ENDS N OR W	#4 STIRRUPS SPACING FROM ENDS S OR E	#4 STIRRUPS TYPE	REMARKS
B34	24x25	6-#10	T	12'-0" 12'-0"	ALL @ 9"		D	
		6-#9	T	10'-0"				
		3-#10	B					
		3-#10	B					
B35	24x25	3-#7	T		ALL @ 12"		A	
		3-#7	B					
B36	24x25	2-#9	T		ALL @ 9"		A	1/2 EA FACE
		2-#7	B					1/2 EA FACE
		2-#7	B					
B36A	16x22/15	3-#9 *	T	6'-0"	ALL @ 6" *		A	SEE 1/S512 FOR BM TAPER PROFILE
		3-#5 *	B					
B37	24x25	5-#9	T	10'-0"	ALL @ 9"		D	
		3-#9	B					
		2-#9	B					
B38	24x25	6-#9	T	12'-0" 12'-0"	ALL @ 9"		D	
		3-#9	B					
		2-#9	B					
B39	24x25	6-#9	T	12'-0" 12'-0"	ALL @ 9"		D	
		2-#9	T	10'-0"				1/2 EA FACE
		2-#9	B					1/2 EA FACE
		3-#9	B					
B40	16x22/15	3-#9 *	T	10'-0"	ALL @ 6" *		A	SEE 1/S512 FOR BM TAPER PROFILE
		3-#5 *	B					
B41	24x25			SAME REINFORCING AS B37				
B42	24x25			SAME REINFORCING AS B38				
B43	24x25			SAME REINFORCING AS B39				
B44	16x22/15			SAME REINFORCING AS B40				SEE 1/S512 FOR BM TAPER PROFILE
B44A	16x15/22	3-#9 *	T	6'-0"	ALL @ 6" *		A	SEE 1/S512 FOR BM TAPER PROFILE
		3-#5 *	B					
B45	24x25	2-#9	T		ALL @ 9"		A	1/2 EA FACE
		2-#7	B					1/2 EA FACE
		2-#7	B					
B46	24x25			SAME REINFORCING AS B36				
B47	16x22/15			SAME REINFORCING AS B36A				SEE 1/S512 FOR BM TAPER PROFILE
B48	16x15/22	3-#9 *	T	10'-0"	ALL @ 6" *		A	SEE 1/S512 FOR BM TAPER PROFILE
		3-#5 *	B	4'-6"				
B49	24x39	2-#9	T	10'-0"	ALL @ 18"		D	SEE 9/S510, 1/2 EA FACE
		2-#9	B					1/2 EA FACE
		3-#9	B					
B50	24x39	6-#9	T	12'-0" 12'-0"	ALL @ 18"		D	SEE 9/S510
		2-#9	B					
		3-#9	B					
B51	24x39	6-#9	T	12'-0" 12'-0"	ALL @ 18"		D	SEE 9/S510
		2-#9	T	10'-0"				1/2 EA FACE
		2-#9	B					1/2 EA FACE
		3-#9	B					
B52	16x22/15	3-#9 *	T	10'-0"	ALL @ 6" *		A	SEE 1/S512 FOR BM TAPER PROFILE
		3-#5 *	B	4'-6"				
B53	16x15/22			SAME REINFORCING AS B44A				SEE 1/S512 FOR BM TAPER PROFILE
B54	24x25			SAME REINFORCING AS B45				
B55	24x25			SAME REINFORCING AS B46				
B56	16x22/15			SAME REINFORCING AS B47				SEE 1/S512 FOR BM TAPER PROFILE
B57	8x25	2-#5	T		ALL @ 12"			HOLD TOP REINF DOWN 1" AT SLAB DEPRESSION
		2-#5	B					
B58	8x25			SAME REINFORCING AS B57				
B59	16x15/22	3-#9 *	T		ALL @ 6" *		A	SEE 1/S512 FOR BM TAPER PROFILE
		3-#5 *	B					
B60	16x22/15	3-#9 *	T		ALL @ 6" *		A	SEE 1/S512 FOR BM TAPER PROFILE
		3-#5 *	B					
B61	10x15/25	2-#7 *	T	10'-0"	ALL @ 6" *		A	SEE 3/S512 FOR BM TAPER PROFILE
		2-#7 *	B					
B62	10x25	2-#7 *	T		ALL @ 9" *		A	
		2-#7 *	B					
B63	10x25	2-#7 *	T	10'-0" 10'-0"	ALL @ 9" *		A	
		2-#7 *	T					
		2-#7 *	B					

CONCRETE BEAM SCHEDULE

BEAM MARK	WIDTH X DEPTH (IN INCHES)	REINFORCING NUMBER & SIZE	LOCATION	NORTH OR WEST / CENTERLINE OF SUPPORTS / SOUTH OR EAST	#4 STIRRUPS SPACING FROM ENDS N OR W	#4 STIRRUPS SPACING FROM ENDS S OR E	#4 STIRRUPS TYPE	REMARKS
B64	10x25	2-#7 *	T	10'-0" 10'-0"	ALL @ 9" *		A	
		2-#7 *	T					
		2-#7 *	B					
B65	10x25/15	2-#7 *	T	10'-0"	ALL @ 6" *		A	SEE 3/S512 FOR BM TAPER PROFILE
		2-#7 *	B					
B66	10x15	2-#7 *	T	10'-0"	ALL @ 6" *		A	
		2-#7 *	B					
B67	10x15	2-#7 *	T		ALL @ 6" *		A	
		2-#7 *	B					
B68	10x15	2-#7 *	T	10'-0" 10'-0"	ALL @ 6" *		A	
		2-#7 *	T					
		2-#7 *	B					
B69	10x15	2-#7 *	T	10'-0" 10'-0"	ALL @ 6" *		A	
		2-#7 *	T					
		2-#7 *	B					
B70	10x15	2-#7 *	T	10'-0"	ALL @ 6" *		A	
		2-#7 *	B					

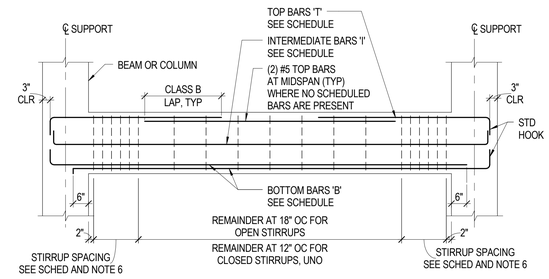

1 TYPICAL SINGLE SPAN CONCRETE BEAM REINFORCEMENT
1/2" = 1'-0"

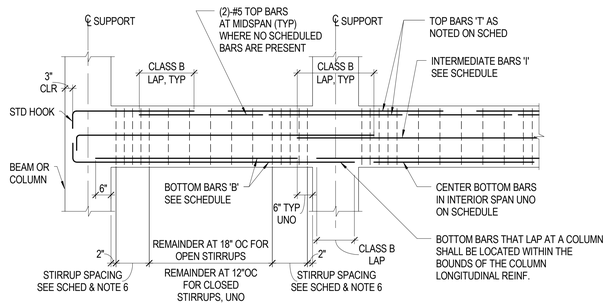

2 TYPICAL MUTLI SPAN CONCRETE BEAM REINFORCEMENT
1/2" = 1'-0"

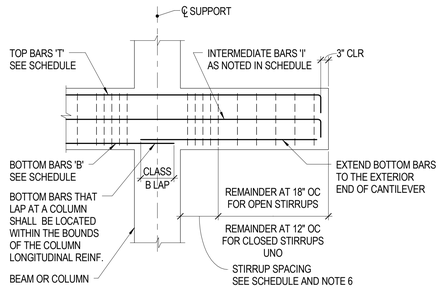

3 TYPICAL CANTILEVER BEAM REINFORCEMENT
1/2" = 1'-0"

TYPICAL BEAM SCHEDULE NOTES:
1. ALL BEAMS SHALL BE CENTERED ON GRID UNO.
2. SEE BEAM SCHEDULES AND BEAM ELEVATIONS FOR REINFORCING BAR LENGTHS.
3. ALL REINFORCING LAP SPLICES SHALL BE CLASS B, UNO.
4. SEE S510 FOR TYPICAL CONCRETE BEAM DETAILS. TYPICAL DETAILS APPLY UNLESS SPECIFICALLY NOTED OTHERWISE ON PLANS., SCHEDULES, OR DETAILS.
5. SEE 6/S510 FOR ADDITIONAL STIRRUPS REQUIRED AT SLEEVES THROUGH BEAMS.
6. STIRRUPS IN 'STIRRUP SPACING COLUMN' SHALL BE AS FOLLOWS:
   10@15" INDICATES 10 STIRRUPS SPACED AT 15" OC
   ALL@12" INDICATES STIRRUPS AT 12" OC ALONG ENTIRE LENGTH OF JOIST
   SEE DETAIL 4/S410 FOR STIRRUP TYPES
7. *** INDICATES EPOXY COATED REINFORCING

hga.
333 East Erie Street
Milwaukee, Wisconsin 53202
Telephone 414.278.8200

ULINE
12575 Uline Drive
Pleasant Prairie, WI 53158

ULINE
SHIPPING SUPPLY SPECIALISTS

NO	DESCRIPTION	DATE
	CP-2	7/10/2015

ISSUANCE HISTORY - THIS SHEET

HGA NO: 3595-001-00

CONCRETE BEAM SCHEDULES

DATE: May 8, 2015

CONSTRUCTION DOCUMENTS

S411

© COPYRIGHT HAMMEL, GREEN AND ABRAHAMSON, INC.

C:\Users\glandrew\Documents\Revit Local Files\S15_3595001100_UlineConferenceCenter_glandrewk-PC6630.rvt
7/9/2015 2:30:32 PM

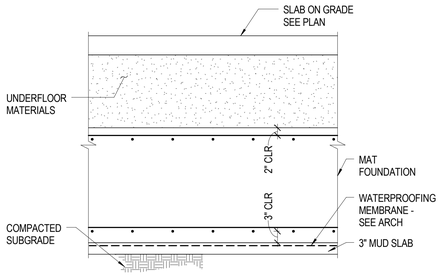

1 TYPICAL SLAB ON GRADE AND MAT FOUNDATION
NTS

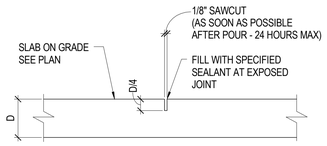

TYPICAL SAW CUT
2 CONTROL JOINT - SLAB ON GRADE
NTS

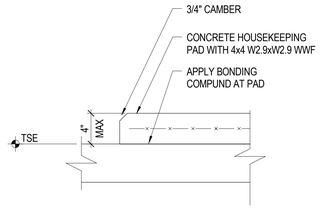

NOTE:
VERIFY EXACT SIZES, THICKNESSES AND LOCATIONS OF HOUSEKEEPING PADS WITH MECHANICAL OR ELECTRICAL CONTRACTOR.

3 SECTION AT EQUIPMENT HOUSEKEEPING PADS
NTS

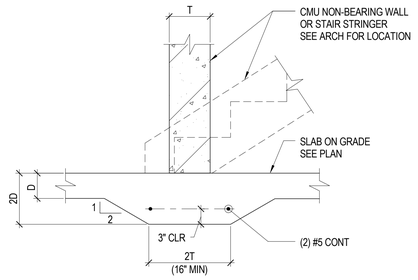

4 TYPICAL THICKENED SLAB ON GRADE
NTS

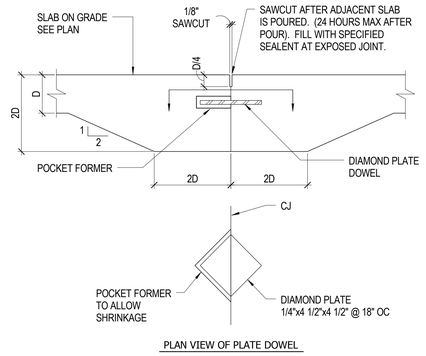

PLAN VIEW OF PLATE DOWEL

5 TYPICAL CONSTRUCTION JOINT - SLAB ON GRADE
NTS

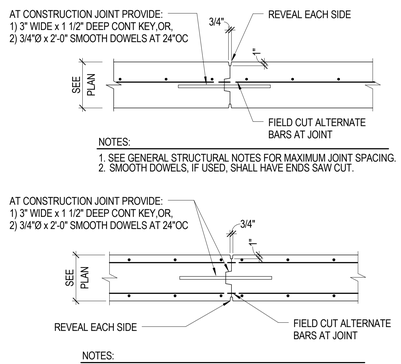

NOTES:
1. SEE GENERAL STRUCTURAL NOTES FOR MAXIMUM JOINT SPACING.
2. SMOOTH DOWELS, IF USED, SHALL HAVE ENDS SAW CUT.

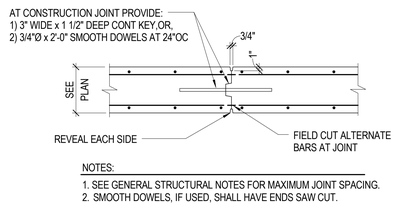

NOTES:
1. SEE GENERAL STRUCTURAL NOTES FOR MAXIMUM JOINT SPACING.
2. SMOOTH DOWELS, IF USED, SHALL HAVE ENDS SAW CUT.

6 CONTROL JOINT IN WALL
NTS

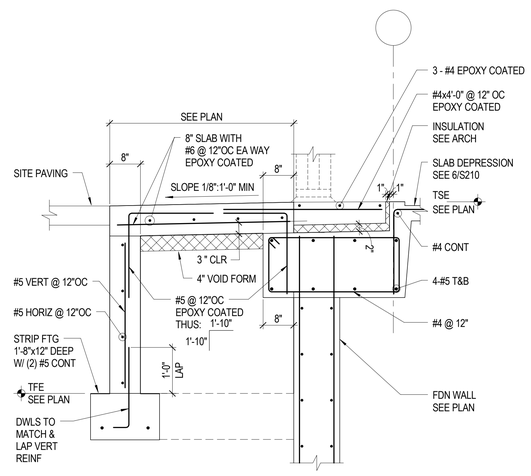

7 TYPICAL EXTERIOR STOOP
NTS

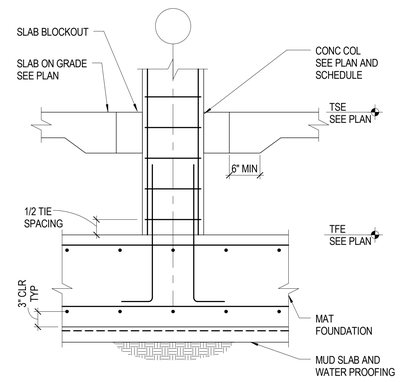

8 TYPICAL CONCRETE COLUMN FOOTING
NTS

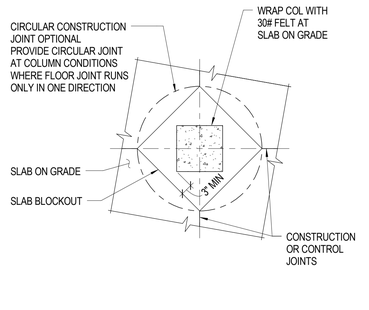

9 TYPICAL SLAB ON GRADE BLOCKOUT AT CONCRETE COLUMNS
NTS

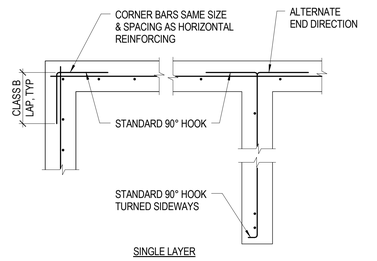

SINGLE LAYER

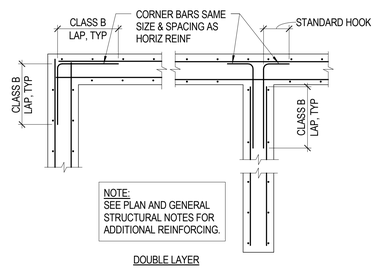

NOTE:
SEE PLAN AND GENERAL STRUCTURAL NOTES FOR ADDITIONAL REINFORCING.

DOUBLE LAYER

10 CONCRETE WALL INTERSECTIONS
NTS

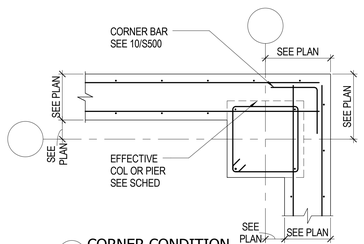

A CORNER CONDITION

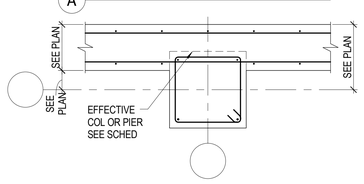

B EXTERIOR CONDITION

NOTES:
1. SEE COLUMN/PIER SCHEDULE FOR SIZE AND REINFORCEMENT OF COLUMN/PIERS.
2. CENTER CAGE ON GRID INTERSECTIONS.

11 TYPICAL COLUMN OR PIER/WALL INTERSECTIONS
NTS

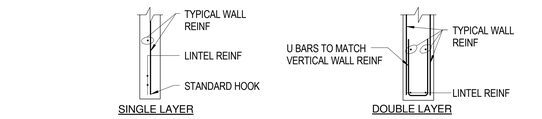

SINGLE LAYER DOUBLE LAYER

TYPICAL LINTEL AT OPENINGS

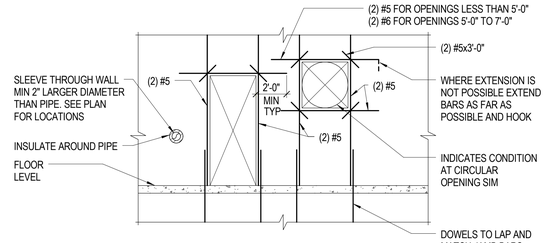

NOTE:
EXTEND JAMB BARS FLOOR TO FLOOR OR FLOOR TO ROOF WHERE OPENING WIDTH EXCEEDS 3'-0" OR PLACE 1/2 OF INTERRUPTED VERTICAL REINF EACH SIDE OF OPENING, WHICHEVER REINFORCING IS GREATER.

12 ADDITIONAL REINFORCING AT OPENINGS IN WALL
NTS

LAP SPLICE AND DEVELOPMENT (Ld) SCHEDULE
(BASED ON ACI 318-08 SECTION 12.2.2 AND 12.15.1)
MODIFY DEVELOPMENT LENGTHS AND LAPS AS REQUIRED BY NOTES BELOW
LENGTHS SHOWN ARE IN INCHES

BAR LOCATION		DEVELOPMENT LENGTH/ CLASS A LAP SPLICE	CLASS B LAP SPLICE
	CONCRETE STRENGTH (PSI)	4000	4000
TOP	#3	19	25
	#4	25	33
	#5	31	41
	#6	37	49
	#7	54	71
	#8	62	81
	#9	70	91
	#10	79	102
	#11	87	114
OTHER	#3	15	19
	#4	19	25
	#5	24	31
	#6	29	37
	#7	42	54
	#8	48	62
	#9	54	70
	#10	61	79
	#11	67	87

LAP SPLICE AND DEVELOPMENT NOTES:

1. TOP INDICATES HORIZONTAL BARS WITH MORE THAN 12 INCHES OF CONCRETE CAST BELOW BARS.
2. APPLY UNLESS SPLICES AND DEVLOPMENT LENGTHS ARE NOTED OTHERWISE ON DRAWINGS.
3. ALL LAP SPLICES SHALL BE CLASS B, UNO.
4. MULTIPLY THE LENGTHS IN THE SCHEDULE BY THE APPROPRIATE MODIFIERS WHEN REQUIRED.

MULTIPLIER	CONDITION
1.20	THREE BAR BUNDLE
1.30	EPOXY COATED TOP BARS (1.50 FOR OTHER BARS)
1.33	- FOUR BAR BUNDLES
1.50	- EPOXY COATED OTHER (NOT TOP) BARS - CLEAR COVER LESS THAN ONE BAR DIAMETER - CENTER TO CENTER SPACING LESS THAN THREE BAR DIAMETERS

13 LAP SPLICE AND DEVELOPMENT LENGTH SCHEDULE
NTS

HGA
333 East Erie Street
Milwaukee, Wisconsin 53202
Telephone 414.278.8200

ULINE
12575 Uline Drive
Pleasant Prairie, WI 53158

ULINE
SHIPPING SUPPLY SPECIALISTS

NO	DESCRIPTION	DATE
	CP-1	5/8/2015
	CP-2	7/10/2015

ISSUANCE HISTORY - THIS SHEET

HGA NO: 3595-001-00

TYPICAL FOUNDATION DETAILS

DATE: May 8, 2015

CONSTRUCTION DOCUMENTS

S500

© COPYRIGHT HAMMEL, GREEN AND ABRAHAMSON, INC.

C:\Users\gtandrewk\Documents\Revit Local Files\15_3595001r100_UlineConferenceCenter_gtandrewk-PQ6830.rvt
7/9/2015 2:30:35 PM

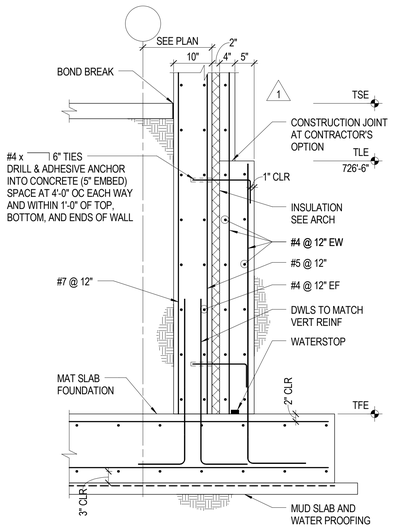

1 SECTION
3/4" = 1'-0"

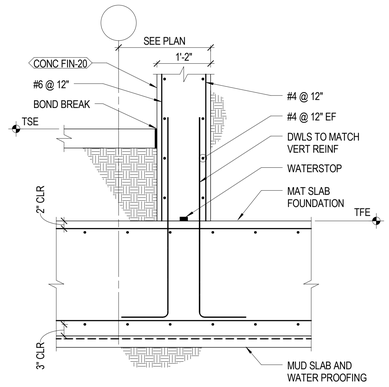

2 SECTION
3/4" = 1'-0"

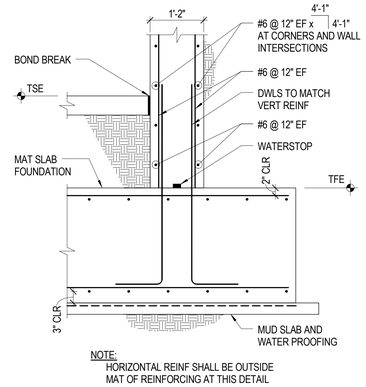

NOTE:
HORIZONTAL REINF SHALL BE OUTSIDE MAT OF REINFORCING AT THIS DETAIL

3 SECTION
3/4" = 1'-0"

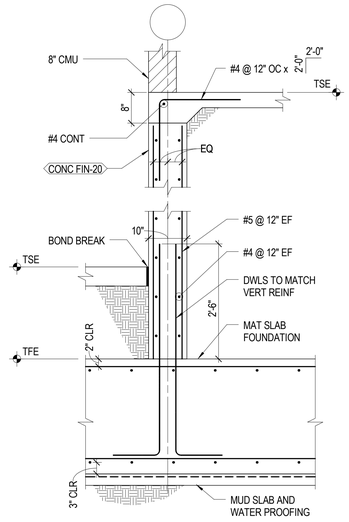

4 SECTION
3/4" = 1'-0"

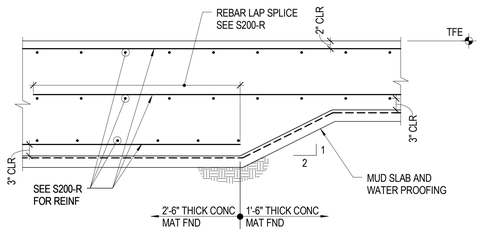

5 SECTION
3/4" = 1'-0"

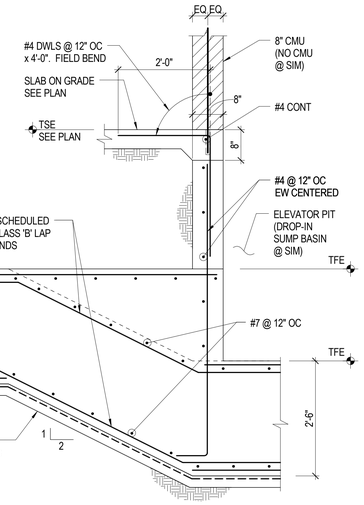

6 TYPICAL ELEVATOR PIT
3/4" = 1'-0"

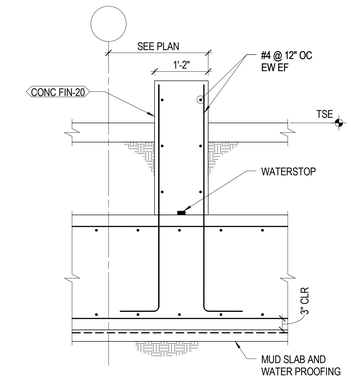

7 SECTION
3/4" = 1'-0"

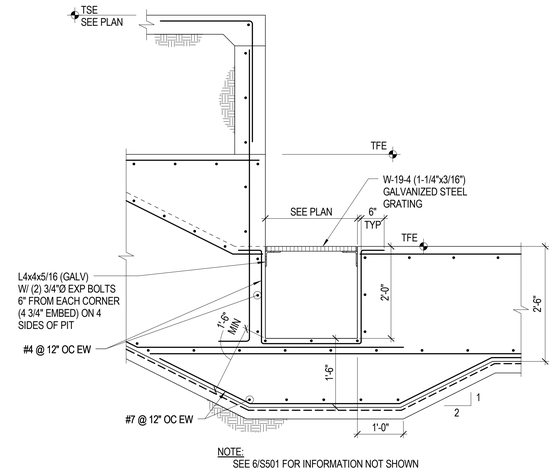

NOTE:
SEE 6/S501 FOR INFORMATION NOT SHOWN

8 TYPICAL ELEVATOR PIT
3/4" = 1'-0"

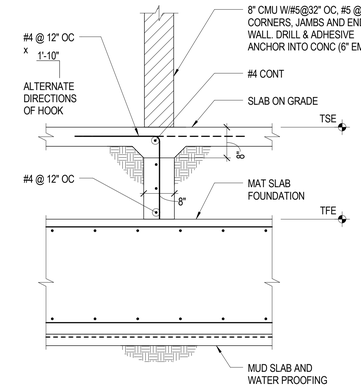

9 SECTION
3/4" = 1'-0"

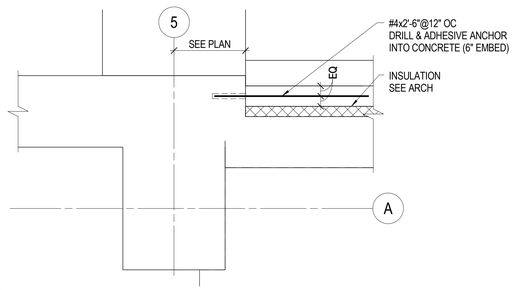

10 DETAIL
1" = 1'-0"

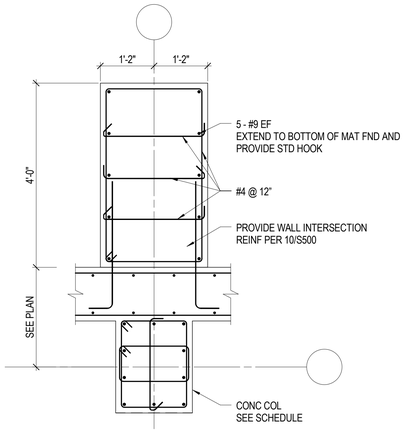

11 DETAIL
3/4" = 1'-0"

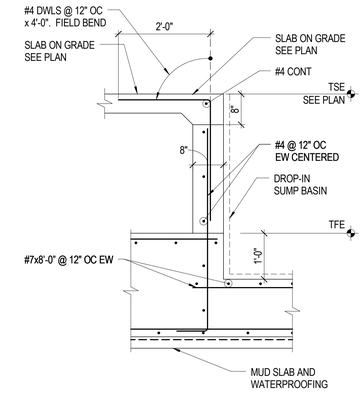

12 SECTION
3/4" = 1'-0"

hga.
333 East Erie Street
Milwaukee, Wisconsin 53202
Telephone 414.278.8200

ULINE
12575 Uline Drive
Pleasant Prairie, WI 53158

ULINE
SHIPPING SUPPLY SPECIALISTS

NO	DESCRIPTION	DATE
	CP-1	5/8/2015
1	SI 1	6/12/2015
	CP-2	7/10/2015

ISSUANCE HISTORY - THIS SHEET

HGA NO: 3595-001-00

FOUNDATION DETAILS

DATE: May 8, 2015

CONSTRUCTION DOCUMENTS

S501

© COPYRIGHT HAMMEL, GREEN AND ABRAHAMSON, INC.

C:\Users\jlandrew\Documents\Revit Local Files\15_3595001\00_UlineCentereonCenter_jlandrew_PC96600.rvt
7/9/2015 2:09:39 PM

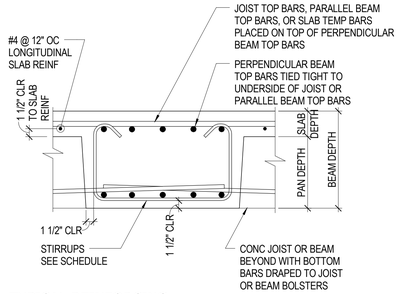

1 TYPICAL REINFORCING LAYOUT AT BEAM PERPENDICULAR TO JOISTS
NTS

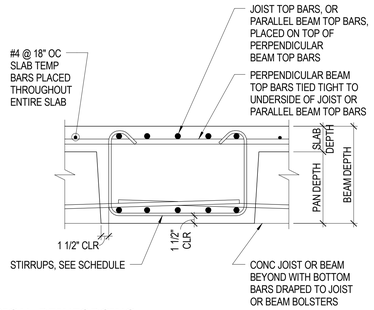

2 TYPICAL REINFORCING LAYOUT AT BEAMS PARALLEL TO JOISTS
NTS

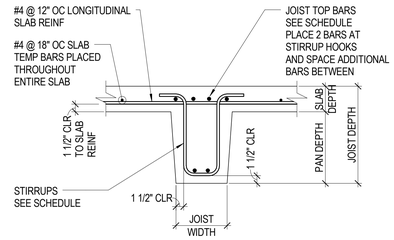

3 TYPICAL JOIST SECTION
NTS

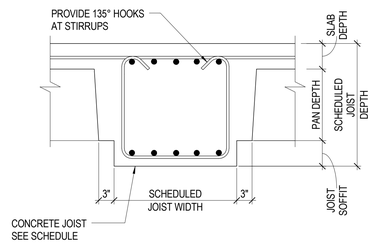

4 TYPICAL DEEPENED CONCRETE SECTION
NTS

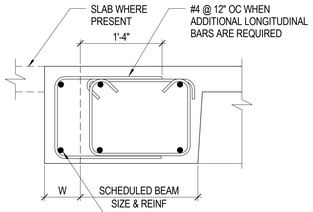

W	ADDITIONAL LONGITUDINAL BARS REQUIRED
0" < W ≤ 4"	NOT REQUIRED
4" < W ≤ 8"	(1) #5 CONT TOP & BOTTOM
8" < W ≤ 16"	(2) #5 CONT TOP & BOTTOM
16" < W ≤ 24"	(3) #5 CONT TOP & BOTTOM
24" < W ≤ 32"	(4) #5 CONT TOP & BOTTOM
32" < W ≤ 40"	(5) #5 CONT TOP & BOTTOM
40" < W ≤ 48"	(6) #5 CONT TOP & BOTTOM

5 VARYING WIDTH BEAM
NTS

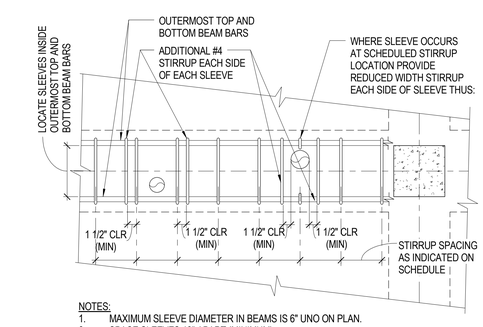

NOTES:
1. MAXIMUM SLEEVE DIAMETER IN BEAMS IS 6" UNO ON PLAN.
2. SPACE SLEEVES 18" APART (MINIMUM).

6 TYPICAL PLAN DETAILS AT SLEEVES THROUGH BEAMS
NTS

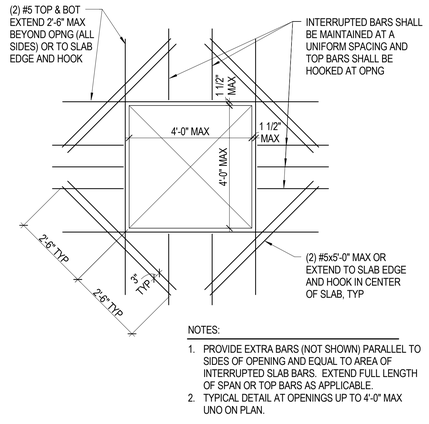

NOTES:
1. PROVIDE EXTRA BARS (NOT SHOWN) PARALLEL TO SIDES OF OPENING AND EQUAL TO AREA OF INTERRUPTED SLAB BARS. EXTEND FULL LENGTH OF SPAN OR TOP BARS AS APPLICABLE.
2. TYPICAL DETAIL AT OPENINGS UP TO 4'-0" MAX UNO ON PLAN.

7 ADDITIONAL REINF AT SMALL SLAB OPENINGS
NTS

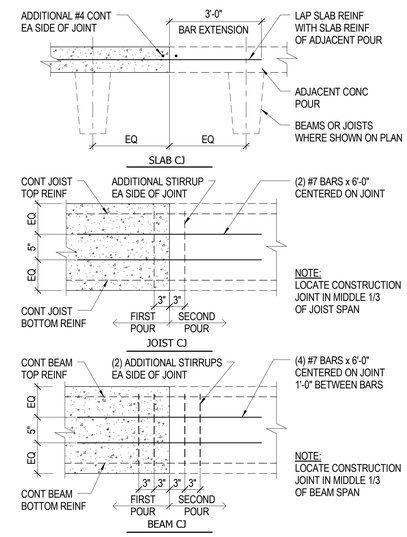

8 TYPICAL CONSTRUCTION JOINT DETAILS
NTS

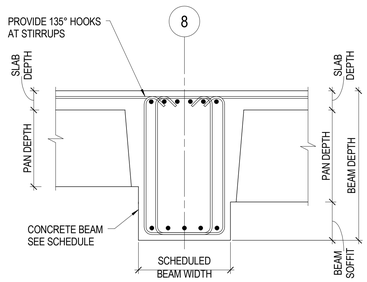

9 SECTION
NTS

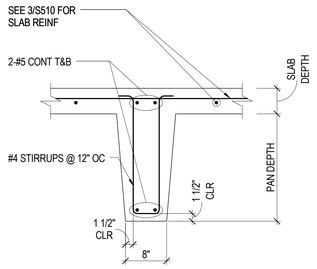

10 SECTION
NTS

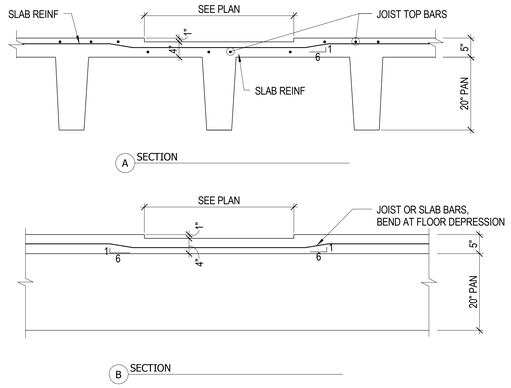

11 SECTIONS AT SLAB DEPRESSION
3/4" = 1'-0"

hga
333 East Erie Street
Milwaukee, Wisconsin 53202
Telephone 414.278.8200

ULINE
12575 Uline Drive
Pleasant Prairie, WI 53158

ULINE
SHIPPING SUPPLY SPECIALISTS

NO	DESCRIPTION	DATE
	CP-2	7/10/2015

ISSUANCE HISTORY - THIS SHEET

HGA NO: 3595-001-00

TYPICAL ELEVATED CONCRETE DETAILS

DATE: May 8, 2015

CONSTRUCTION DOCUMENTS

S510

© COPYRIGHT HAMMEL, GREEN AND ABRAHAMSON, INC.

7/9/2015 2:30:42 PM C:\Users\glandrew\Documents\Revit Local Files\S15_3595001100_UlineCentennialCenter_glandrewk-PC6830.rvt

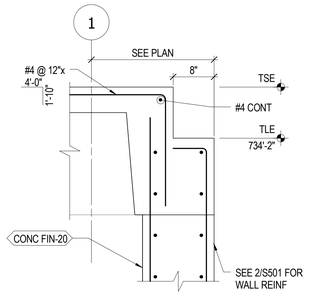

1 SECTION
1" = 1'-0"

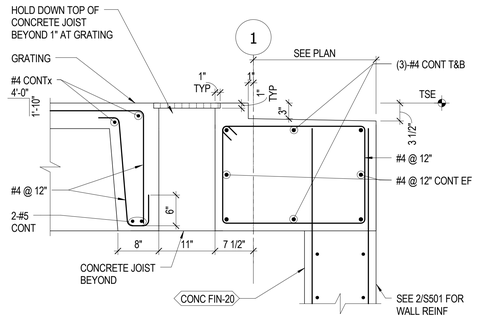

2 SECTION
1" = 1'-0"

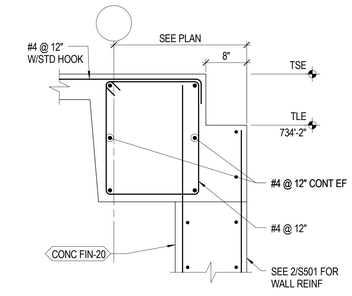

3 SECTION
1" = 1'-0"

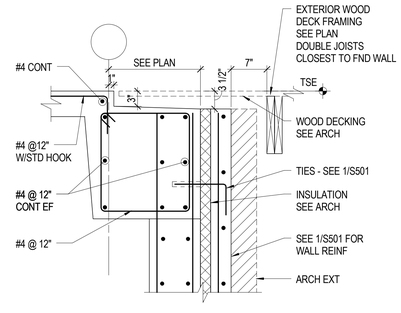

4 SECTION
1" = 1'-0"

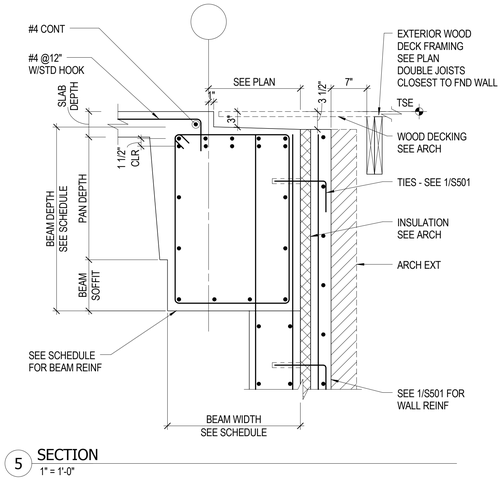

5 SECTION
1" = 1'-0"

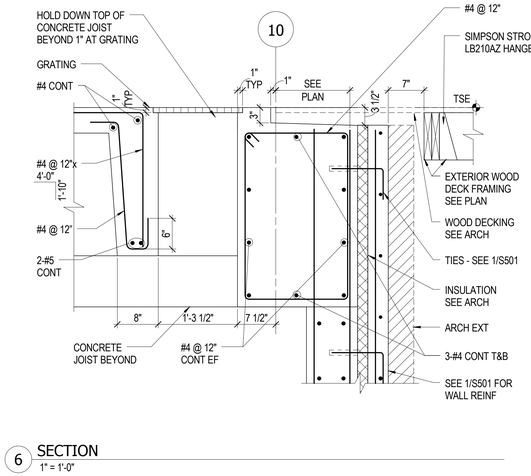

6 SECTION
1" = 1'-0"

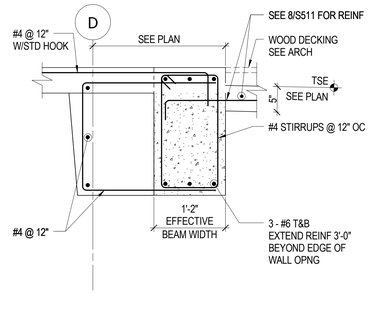

7 SECTION
1" = 1'-0"

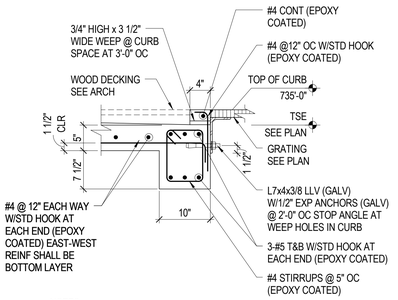

NOTES:
1. DETAIL SHALL BE CONSTRUCTED USING INTEGRALLY COLORED CONCRETE.
2. CONCRETE FINISH <CONC FIN-21>
3. PROVIDE ARCHIETECTURALLY EXPOSED CONCRETE FINISH PER SPECIFICATIONS.

8 SECTION
1" = 1'-0"

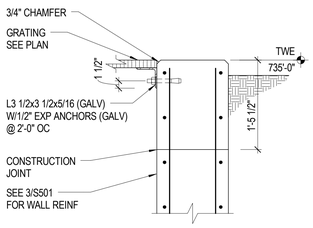

NOTES:
1. CONCRETE ABOVE CONSTRUCTION JOINT SHALL BE CONSTRUCTED USING INTEGRALLY COLORED CONCRETE.
2. CONCRETE ABOVE CONSTRUCTION JOINT SHALL BE CONCRETE FINISH <CONC FIN-21>
3. CONCRETE ABOVE CONSTRUCTION JOINT SHALL PROVIDE ARCHITECTURALLY EXPOSED CONCRETE PER SPECIFICATIONS

9 SECTION
1" = 1'-0"

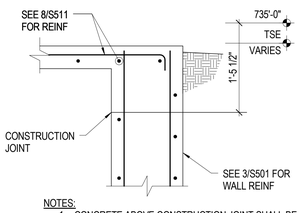

NOTES:
1. CONCRETE ABOVE CONSTRUCTION JOINT SHALL BE CONSTRUCTED USING INTEGRALLY COLORED CONCRETE.
2. CONCRETE ABOVE CONSTRUCTION JOINT SHALL BE CONCRETE FINISH CONC FIN-21>
3. CONCRETE ABOVE CONSTRUCTION JOINT SHALL PROVIDE ARCHITECTURALLY EXPOSED CONCRETE PER SPECIFICATIONS

10 SECTION
1" = 1'-0"

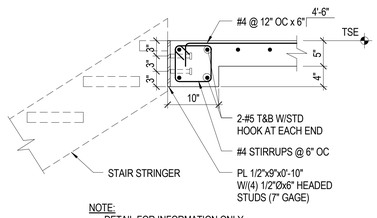

NOTE:
DETAIL FOR INFORMATION ONLY

11 SECTION
1" = 1'-0"

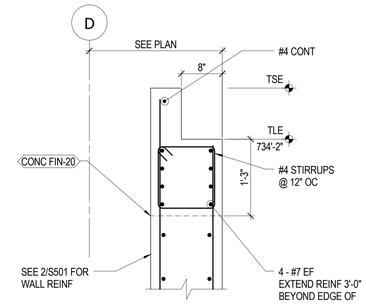

12 SECTION
1" = 1'-0"

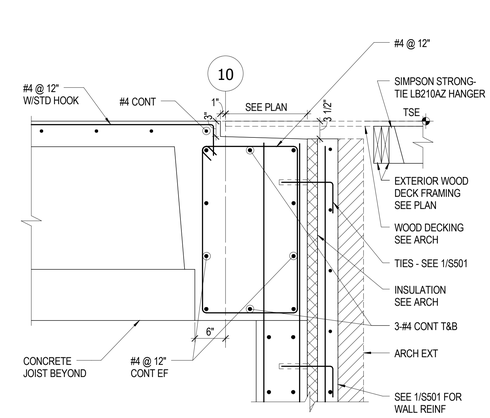

13 SECTION
1" = 1'-0"

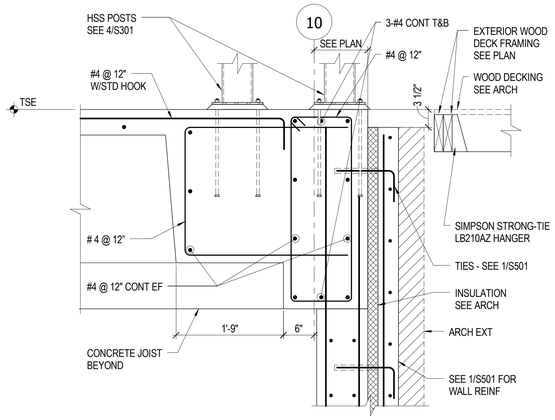

14 SECTION
1" = 1'-0"

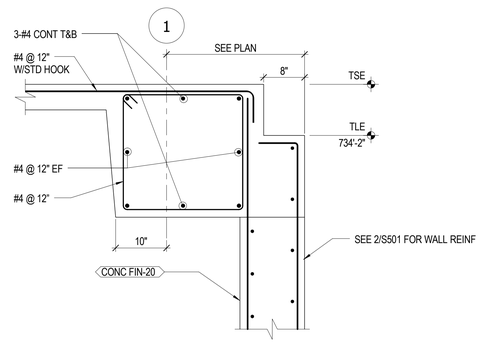

15 SECTION
1" = 1'-0"

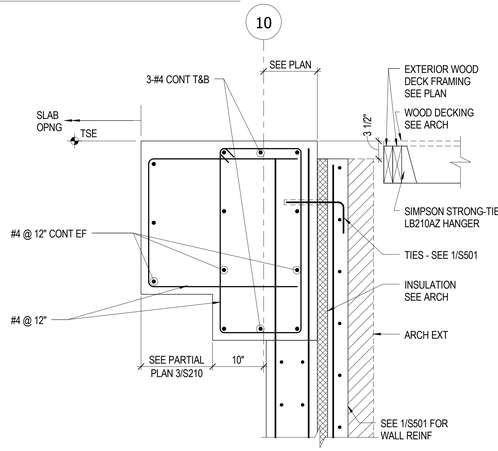

16 SECTION
1" = 1'-0"

HGA
333 East Erie Street
Milwaukee, Wisconsin 53202
Telephone 414.278.8200

ULINE
12575 Uline Drive
Pleasant Prairie, WI 53158

ULINE
SHIPPING SUPPLY SPECIALISTS

NO	DESCRIPTION	DATE
	CP-1	5/8/2015
	CP-2	7/10/2015

ISSUANCE HISTORY - THIS SHEET

HGA NO: 3595-001-00

ELEVATED CONCRETE DETAILS

DATE: May 8, 2015

CONSTRUCTION DOCUMENTS

S511

© COPYRIGHT HAMMEL, GREEN AND ABRAHAMSON, INC.

7/9/2015 2:30:47 PM C:\Users\glandrew\Documents\Revit Local Files\S15_3595001100_UlineConferenceCenter_glandrewk-PO6830.rvt

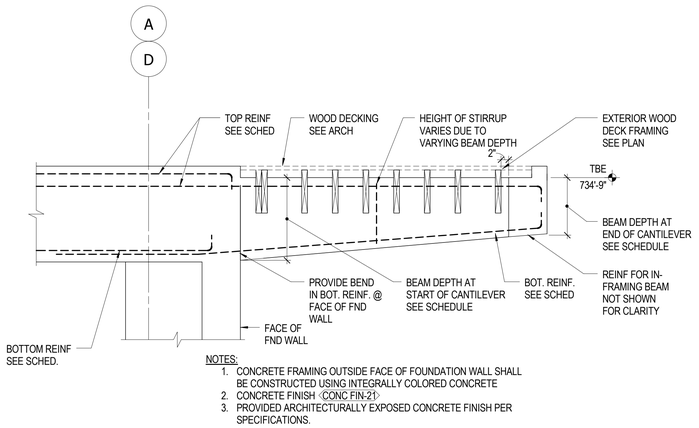

NOTES:
1. CONCRETE FRAMING OUTSIDE FACE OF FOUNDATION WALL SHALL BE CONSTRUCTED USING INTEGRALLY COLORED CONCRETE
2. CONCRETE FINISH ‹CONC FIN-21›
3. PROVIDED ARCHITECTURALLY EXPOSED CONCRETE FINISH PER SPECIFICATIONS.

1 SECTION
3/4" = 1'-0"

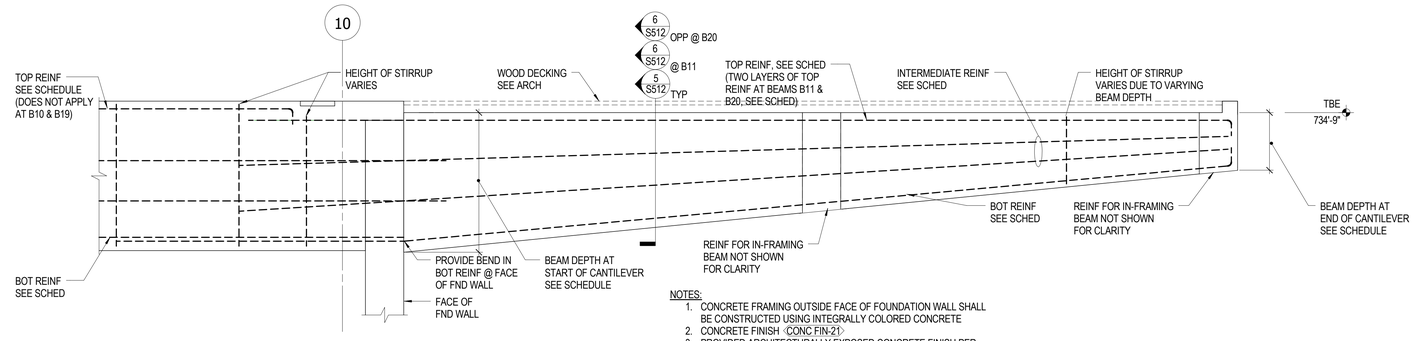

NOTES:
1. CONCRETE FRAMING OUTSIDE FACE OF FOUNDATION WALL SHALL BE CONSTRUCTED USING INTEGRALLY COLORED CONCRETE
2. CONCRETE FINISH ‹CONC FIN-21›
3. PROVIDED ARCHITECTURALLY EXPOSED CONCRETE FINISH PER SPECIFICATIONS.

2 SECTION
3/4" = 1'-0"

NOTES:
1. CONCRETE FRAMING OUTSIDE FACE OF FOUNDATION WALL SHALL BE CONSTRUCTED USING INTEGRALLY COLORED CONCRETE
2. CONCRETE FINISH CONC FIN-21
3. PROVIDED ARCHITECTURALLY EXPOSED CONCRETE FINISH PER SPECIFICATIONS.

3 SECTION
3/4" = 1'-0"

4 SECTION
3/4" = 1'-0"

NOTES:
1. CONCRETE FRAMING OUTSIDE FACE OF FOUNDATION WALL SHALL BE CONSTRUCTED USING INTEGRALLY COLORED CONCRETE
2. CONCRETE FINISH ‹CONC FIN-21›
3. PROVIDED ARCHITECTURALLY EXPOSED CONCRETE FINISH PER SPECIFICATIONS.

5 SECTION
1" = 1'-0"

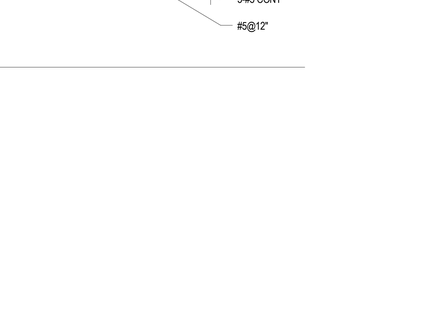

NOTES:
1. CONCRETE FRAMING OUTSIDE FACE OF FOUNDATION WALL SHALL BE CONSTRUCTED USING INTEGRALLY COLORED CONCRETE
2. CONCRETE FINISH ‹CONC FIN-21›
3. PROVIDED ARCHITECTURALLY EXPOSED CONCRETE FINISH PER SPECIFICATIONS.

6 SECTION
1" = 1'-0"

NOTES:
1. DETAIL SHALL BE CONSTRUCTED USING INTEGRALLY COLORED CONCRETE.
2. CONCRETE FINISH CONC FIN-21
3. PROVIDE ARCHIETECTURALLY EXPOSED CONCRETE FINISH PER SPECIFICATIONS.

7 SECTION
1" = 1'-0"

NOTES:
1. DETAIL SHALL BE CONSTRUCTED USING INTEGRALLY COLORED CONCRETE.
2. CONCRETE FINISH ‹CONC FIN-21›
3. PROVIDE ARCHIETECTURALLY EXPOSED CONCRETE FINISH PER SPECIFICATIONS.

8 SECTION
1" = 1'-0"

9 DETAIL
3/4" = 1'-0"

10 SECTION
3/4" = 1'-0"

11 SECTION
3/4" = 1'-0"

HGA
333 East Erie Street
Milwaukee, Wisconsin 53202
Telephone 414.278.8200

ULINE
12575 Uline Drive
Pleasant Prairie, WI 53158

ULINE
SHIPPING SUPPLY SPECIALISTS

NO	DESCRIPTION	DATE
	CP-2	7/10/2015

ISSUANCE HISTORY - THIS SHEET

HGA NO: 3595-001-00

ELEVATED CONCRETE DETAILS

DATE: May 8, 2015

CONSTRUCTION DOCUMENTS

S512

© COPYRIGHT HAMMEL, GREEN AND ABRAHAMSON, INC.

7/9/2015 2:30:50 PM
C:\Users\plandrew\Documents\Revit Local Files\S15_3595001100_UlineConferenceCenter_plandrewk-PC6800.rvt

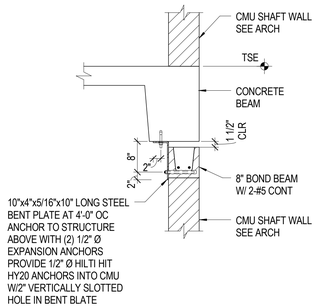

1 SECTION
3/4" = 1'-0"

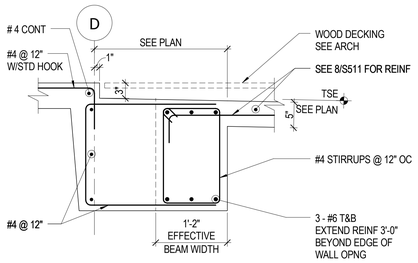

2 SECTION
1" = 1'-0"

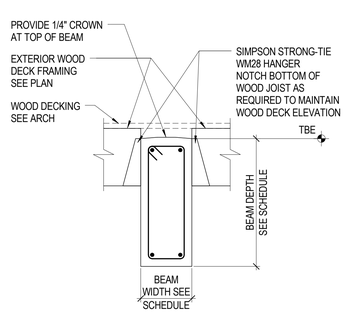

NOTES:
1. CONCRETE FRAMING OUTSIDE FACE OF FOUNDATION WALL SHALL BE CONSTRUCTED USING INTEGRALLY COLORED CONCRETE
2. CONCRETE FINISH <CONC FIN-21>
3. PROVIDED ARCHITECTURALLY EXPOSED CONCRETE FINISH PER SPECIFICATIONS.

3 SECTION
1" = 1'-0"

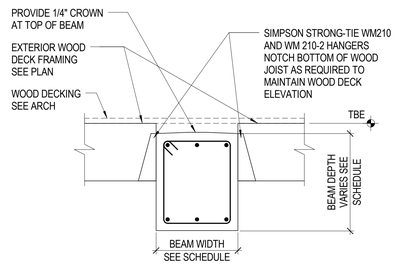

NOTES:
1. CONCRETE FRAMING OUTSIDE FACE OF FOUNDATION WALL SHALL BE CONSTRUCTED USING INTEGRALLY COLORED CONCRETE
2. CONCRETE FINISH <CONC FIN-21>
3. PROVIDED ARCHITECTURALLY EXPOSED CONCRETE FINISH PER SPECIFICATIONS.

4 SECTION
1" = 1'-0"

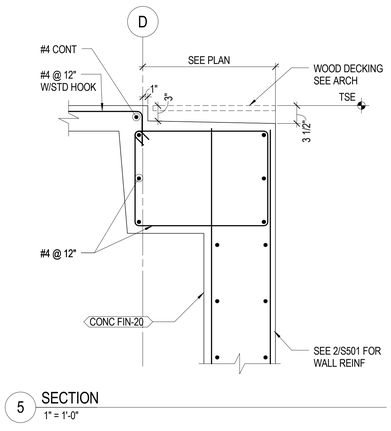

5 SECTION
1" = 1'-0"

hga.
333 East Erie Street
Milwaukee, Wisconsin 53202
Telephone 414.278.8200

ULINE
12575 Uline Drive
Pleasant Prairie, WI 53158

ULINE
SHIPPING SUPPLY SPECIALISTS

NO	DESCRIPTION	DATE
	CP-2	7/10/2015

ISSUANCE HISTORY - THIS SHEET

HGA NO: 3595-001-00

ELEVATED CONCRETE DETAILS

DATE: May 8, 2015

CONSTRUCTION DOCUMENTS

S513

© COPYRIGHT HAMMEL, GREEN AND ABRAHAMSON, INC.

7/9/2015 2:30:52 PM C:\Users\glandrewk\Documents\Revit Local Files\S15_3595001100_UlineConferenceCenter_glandrewk-PC6800.rvt

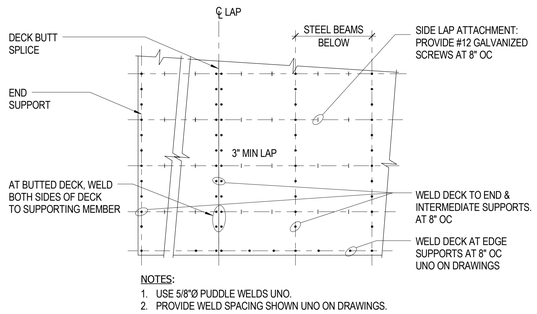

1 TYPICAL ROOF DECK ATTACHMENT
NTS

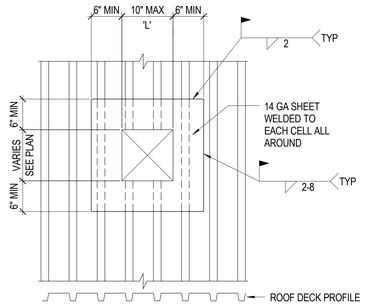

2 FOR OPENINGS TO 10" WIDE PERPENDICULAR TO DECK SPAN
NTS

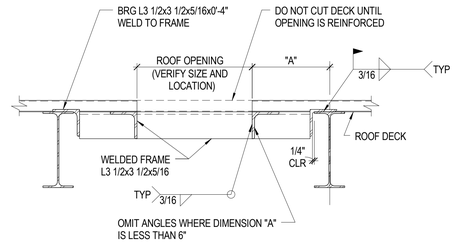

3 TYPICAL ROOF OPENING
NTS

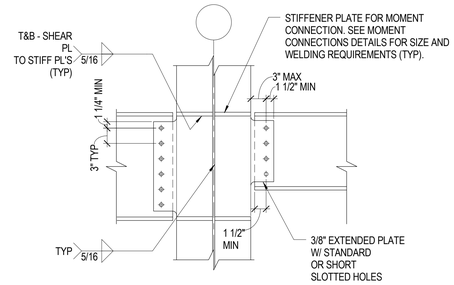

CONNECTION SCHEDULE	
BEAM SIZE	NUMBER OF 3/4"Ø A325-SC BOLTS
W8, W10	2
W12, W14	3
W16	4
W18	5
W21	6
W24	7
W27	8

4 EXTENDED SINGLE PLATE BEAM TO COLUMN CONNECTION DETAIL
NTS

NOTE:
ROOF DECK AND FRAMING ABOVE BEAM NOT SHOWN FOR CLARITY

5 DETAIL
3/4" = 1'-0"

NOTE:
ROOF DECK AND FRAMING ABOVE BEAM NOT SHOWN FOR CLARITY

6 DETAIL
3/4" = 1'-0"

hga.
333 East Erie Street
Milwaukee, Wisconsin 53202
Telephone 414.278.8200

ULINE
12575 Uline Drive
Pleasant Prairie, WI 53158

ULINE
SHIPPING SUPPLY SPECIALISTS

NO	DESCRIPTION	DATE
	CP-2	7/10/2015

ISSUANCE HISTORY - THIS SHEET

HGA NO: 3595-001-00

TYPICAL STEEL SECTIONS AND DETAILS

DATE: May 8, 2015

CONSTRUCTION DOCUMENTS

S700

© COPYRIGHT HAMMEL, GREEN AND ABRAHAMSON, INC.

7/9/2015 2:30:55 PM C:\Users\jlandrew\Documents\Revit Local Files\S15_3595001100_UlineConferenceCenter_jlandrewk-PO6830.rvt

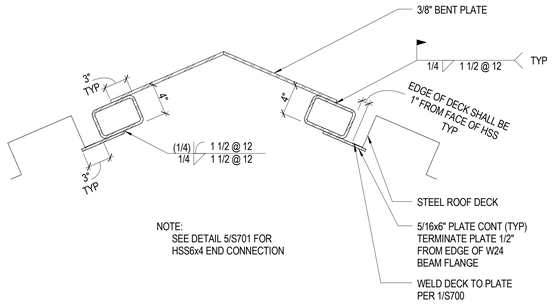

1 SECTION
1 1/2" = 1'-0"

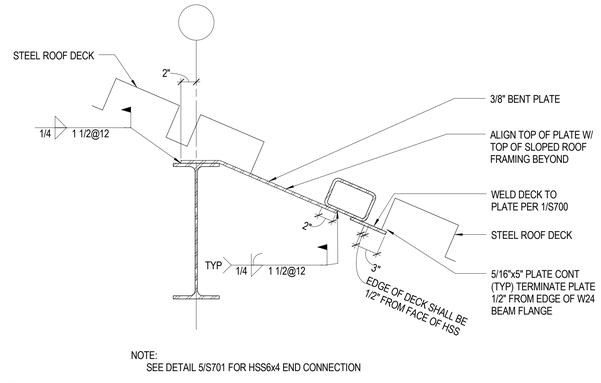

2 SECTION
1 1/2" = 1'-0"

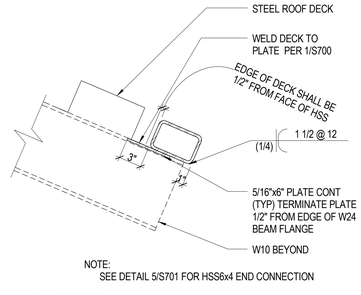

3 SECTION
1 1/2" = 1'-0"

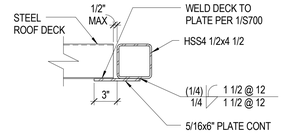

4 SECTION
1 1/2" = 1'-0"

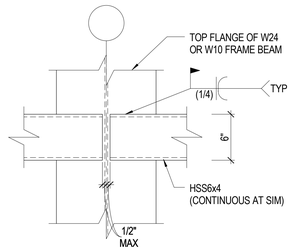

5 PLAN DETAIL
1 1/2" = 1'-0"

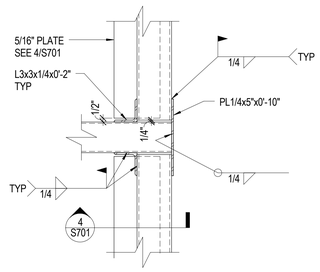

6 PLAN DETAIL
1 1/2" = 1'-0"

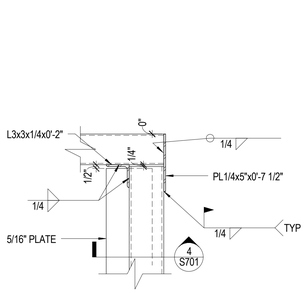

7 PLAN DETAIL
1 1/2" = 1'-0"

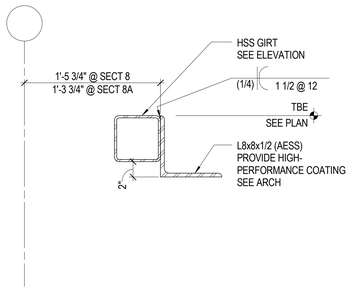

8 SECTION
1 1/2" = 1'-0"

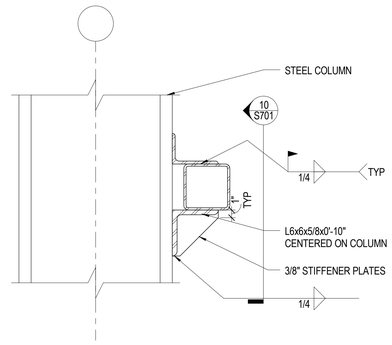

9 SECTION
1 1/2" = 1'-0"

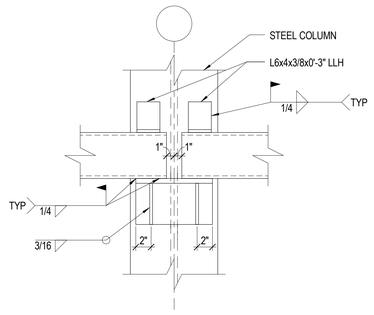

10 SECTION
1 1/2" = 1'-0"

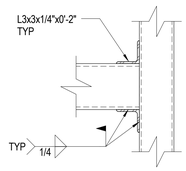

11 PLAN DETAIL
1 1/2" = 1'-0"

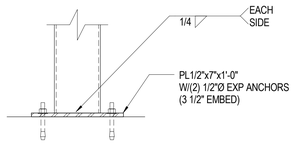

12 SECTION
1 1/2" = 1'-0"

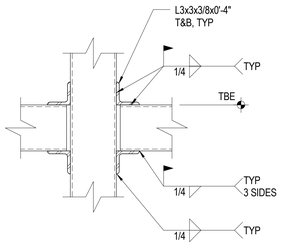

13 SECTION
1 1/2" = 1'-0"

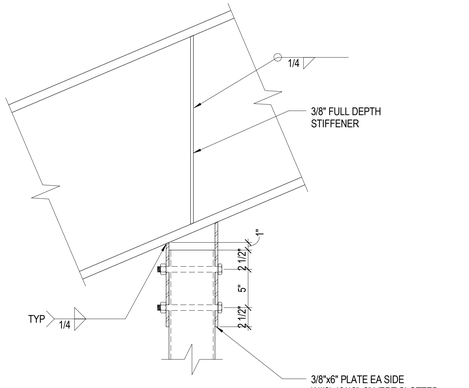

14 SECTION
1 1/2" = 1'-0"

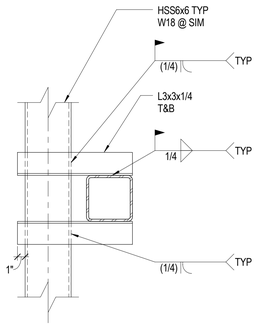

15 SECTION
1 1/2" = 1'-0"

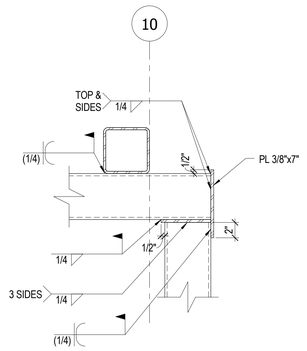

16 SECTION
1 1/2" = 1'-0"

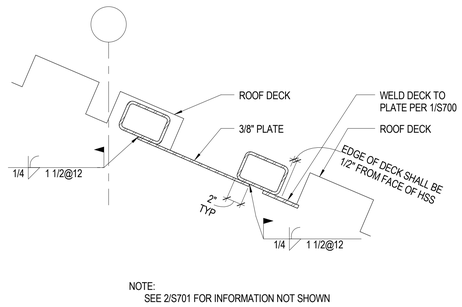

NOTE:
SEE 2/S701 FOR INFORMATION NOT SHOWN

17 SECTION
1 1/2" = 1'-0"

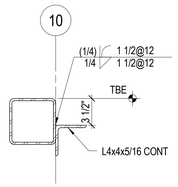

18 SECTION
1 1/2" = 1'-0"

HGA
333 East Erie Street
Milwaukee, Wisconsin 53202
Telephone 414.278.8200

ULINE
12575 Uline Drive
Pleasant Prairie, WI 53158

ULINE
SHIPPING SUPPLY SPECIALISTS

NO	DESCRIPTION	DATE
	CP-2	7/10/2015

ISSUANCE HISTORY - THIS SHEET

HGA NO: 3595-001-00

STEEL SECTIONS AND DETAILS

DATE: May 8, 2015

CONSTRUCTION DOCUMENTS

S701

© COPYRIGHT HAMMEL, GREEN AND ABRAHAMSON, INC.

C:\Users\glandrew\Documents\Revit Local Files\15_3595001100_UlineConferenceCenter_glandrew.PC0630.rvt
7/9/2015 2:30:58 PM

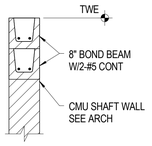

1 SECTION
3/4" = 1'-0"

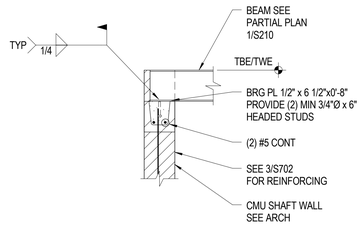

2 SECTION
3/4" = 1'-0"

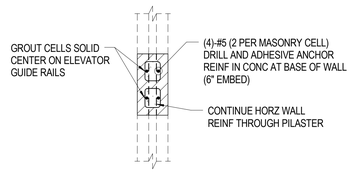

3 SECTION
3/4" = 1'-0"

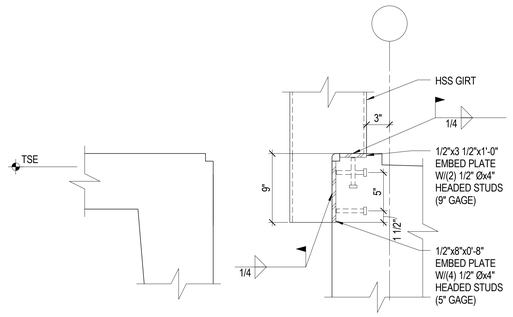

4 SECTION
1 1/2" = 1'-0"

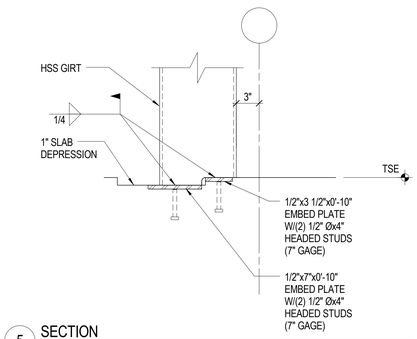

5 SECTION
1 1/2" = 1'-0"

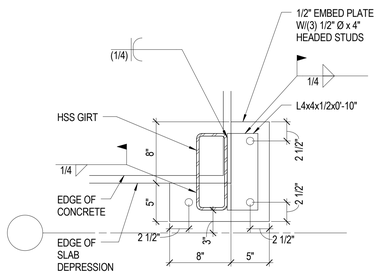

6 DETAIL
1 1/2" = 1'-0"

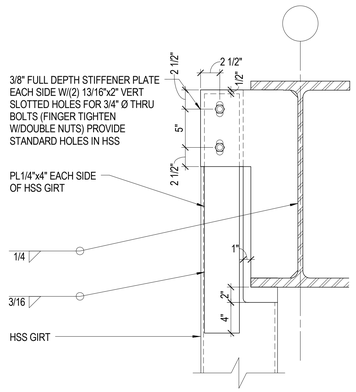

7 SECTION
1 1/2" = 1'-0"

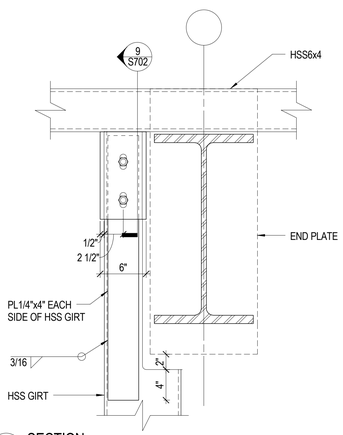

8 SECTION
1 1/2" = 1'-0"

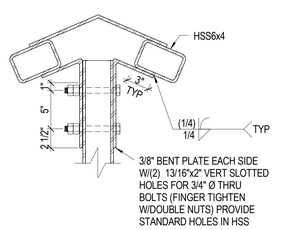

9 SECTION
1 1/2" = 1'-0"

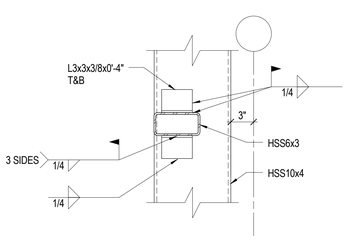

10 SECTION
1 1/2" = 1'-0"

hga
333 East Erie Street
Milwaukee, Wisconsin 53202
Telephone 414.278.8200

ULINE
12575 Uline Drive
Pleasant Prairie, WI 53158

ULINE
SHIPPING SUPPLY SPECIALISTS

NO	DESCRIPTION	DATE
	CP-2	7/10/2015

ISSUANCE HISTORY - THIS SHEET

HGA NO: 3595-001-00

SECTIONS AND DETAILS

DATE: May 8, 2015

CONSTRUCTION DOCUMENTS

S702

© COPYRIGHT HAMMEL, GREEN AND ABRAHAMSON, INC.

C:\Users\glandrews\Documents\Revit Local Files\S15_3595001(0)_UlineConferenceCenter_glandrews-PC96600.rvt

7/9/2015 2:31:00 PM

A	
ACS	AUTOMATIC CONTROL SYSTEM
AFF	ABOVE FINISHED FLOOR
AFMS	AIRFLOW MEASURING STATION
AG	AIR GAP FITTING
AHU	AIR HANDLING UNIT
ALT	ALTERNATE
AP	ACCESS PANEL(S)
APD	AIR PRESSURE DROP
ARCH	ARCHITECT(URAL)
ATU	AIR TERMINAL UNIT
B	
BHP	BRAKE HORSE POWER
BLDG	BUILDING
BSMT	BASEMENT
BTUH	BRITISH THERMAL UNIT PER HOUR
BWV	BACK WATER VALVE
C	
CFH	CUBIC FOOT PER HOUR
CFM	CUBIC FOOT PER MINUTE
CIP	CAST IRON PIPE
CLG	CEILING
CO	CLEAN OUT
COMB	COMBINATION
CONC	CONCRETE
COND	CONDENS(ATE) (ER)
CONN	CONNECTION
CONT	CONTINU(E) (OUS) (ATION)
CONTR	CONTRACT(OR)
CORR	CORRIDOR
D	
DA	DIALYSIS ACID
DDC	DIRECT DIGITAL CONTROL (PANEL)
DEG	DEGREE(S)
DET	DETAIL
DI	DEIONIZED WATER
DIFF	DIFFUSER
DMPR	DAMPER
DN	DOWN
DW	DIALYSIS WATER
DWG(S)	DRAWING(S)
E	
EA	EACH
EA	EXHAUST AIR
ELEC	ELECTRIC(AL)
EMER	EMERGENCY
EXG	EXISTING
EXH	EXHAUST
EJ	ESPANSION JOINT
EXT	EXTERIOR
F	
F	FAHRENHEIT
FDV	FIRE DEPARTMENT VALVE
FFD	FUNNEL FLOOR DRAIN
FFE	FINISHED FLOOR ELEVATION
FLR	FLOOR
FLEX	FLEXIBLE
FPM	FEET PER MINUTE
FP	FAN POWERED VAV BOX
F&T	FLOAT AND THERMOSTATIC (TRAP)
FT	FOOT, FEET
FTG	FOOTING
FTR	FINNED TUBE RADIATION
G	
GA	GAUGE
GAL	GALLON
GALV	GALVANIZED
GEN	GENERATOR
GENL	GENERAL
GPH	GALLON(S) PER HOUR
GPM	GALLON(S) PER MINUTE
GRL	GRILLE
H	
HB	HOSE BIB
HP	HIGH PRESSURE
HP	HORSEPOWER
HTG	HEATING
HTR	HEATER
HV	HOSE VALVE
HVAC	HEATING, VENTILATION AND AIR CONDITIONING
I	
ID	INSIDE DIAMETER/DIMENSION
IN	INCH(ES)
INSUL	INSULATION
INV	INVERT
L	
LBS/HR	POUNDS PER HOUR
LF	LINEAL FOOT, FEET
LVR	LOUVER
M	
MAX	MAXIMUM
MBH	1000 BTUH
MCC	MOTOR CONTROL CENTER
MECH	MECHANICAL(LY)
MEZZ	MEZZANINE
MFR	MANUFACTURER
MIN	MINIMUM
MIN	MINUTE
MISC	MISCELLANEOUS
N	
NIC	NOT IN CONTRACT
NO	NUMBER
NTS	NOT TO SCALE
O	
OA	OUTSIDE AIR
OD	OUTSIDE DIAMETER/DIMENSION
P	
PD	PRESSURE DROP
PLBG	PLUMBING
PRES	PRESSURE
PSI	POUNDS PER SQUARE INCH
PVC	POLYVINYL CHLORIDE
R	
R	RADIUS
RA	RETURN AIR
RAV	RETURN VAV
REG	REGISTER
REQD	REQUIRED
RH	RELATIVE HUMIDITY
RM	ROOM
RO	REVERSE OSMOSIS
RPM	REVOLUTIONS PER MINUTE
RPZ	REDUCED PRESSURE BACKFLOW PREVENTER
RTU	ROOFTOP UNIT
S	
SA	SUPPLY AIR
SHT	SHEET
SP	STATIC PRESSURE
SPEC(S)	SPECIFICATION(S)
SQ	SQUARE
SS	STAINLESS STEEL
STRUC	STRUCTUR(E) (AL)
T	
T	THERMOSTAT
TEMP	TEMPERATURE
TMV	THERMOSTATIC MIXING VALVE
TYP	TYPICAL
V	
VAV	VARIABLE AIR VOLUME
VENT	VENTILATION OR VENTILATOR
VERT	VERTICAL
VIB SOL	VIBRATION ISOLATION
VOL	VOLUME
VS	VENT STACK
VSD	VARIABLE SPEED DRIVE (MOTOR CONTROLLER)
VTR	VENT THROUGH ROOF
W	
W	WASTE
W/	WITH
W/O	WITHOUT
WH	WALL HYDRANT
WS	WASTE STACK
WTR	WATER

REFER TO PIPING AND EQUIPMENT SCHEDULES FOR ADDITIONAL ABBREVIATIONS.

1 ABBREVIATIONS
NO SCALE

- 24x12 — RECTANGULAR SIZE FIRST DIMENSION SIDE SHOWN
- 24x12Ø — FLAT OVAL SIZE FIRST DIMENSION SIDE SHOWN
- 12Ø — ROUND SIZE
- CONCENTRIC TRANSITION RECTANGULAR, ROUND OR OVAL
- ECCENTRIC TRANSITION RECTANGULAR, ROUND OR OVAL
- UP — INCLINED RISE WITH RESPECT TO AIRFLOW RECTANGULAR, ROUND OR OVAL
- DN — INCLINED DROP WITH RESPECT TO AIRFLOW RECTANGULAR, ROUND OR OVAL
- ELBOW UP, RECTANGULAR SUPPLY OR OUTSIDE AIR
- ELBOW DOWN, RECTANGULAR SUPPLY OR OUTSIDE AIR
- ELBOW UP, RECTANGULAR RETURN
- ELBOW DOWN, RECTANGULAR RETURN
- ELBOW UP, RECTANGULAR EXHAUST
- ELBOW DOWN, RECTANGULAR EXHAUST
- ELBOW UP, ROUND (FLAT OVAL SIMILAR)
- ELBOW DOWN, ROUND (FLAT OVAL SIMILAR)
- SQUARE ELBOW W/ TURNING VANES, RECTANGULAR
- SMOOTH RADIUS ELBOW RECTANGULAR, ROUND OR FLAT OVAL
- DIVIDED FLOW FITTING, RECTANGULAR BRANCH AIRFLOW AT LEAST 25% OF MAIN
- TAP-IN BRANCH W/ VOLUME DAMPER RECTANGULAR MAIN AND BRANCH
- SPIN-IN STRAIGHT TAP W/ VOLUME DAMPER RECTANGULAR MAIN, ROUND OR FLAT OVAL BRANCH
- SPIN-IN CONICAL TAP W/ VOLUME DAMPER RECTANGULAR MAIN, ROUND OR FLAT OVAL BRANCH
- BRANCH, CONICAL LATERAL FITTING W/ VOLUME DAMPER ROUND OR FLAT OVAL MAIN AND BRANCH
- BRANCH, CONICAL TEE FITTING WITH VOLUME DAMPER ROUND OR FLAT OVAL MAIN AND BRANCH
- FLEXIBLE CONNECTION TO EQUIPMENT
- ROUND FLEXIBLE DUCT
- DUCT WITH LINER
- DUCT WITH FIRE WRAP
- VOLUME DAMPER
- B — BACKDRAFT DAMPER
- M — MOTORIZED DAMPER
- S — SMOKE DAMPER
- F — FIRE DAMPER
- FS — SMOKE/FIRE DAMPER

2 DUCTWORK DESIGNATIONS AND SYMBOLS
NO SCALE

- 24x12 — RECTANGULAR SIZE FIRST DIMENSION SIDE SHOWN
- 24x12Ø — FLAT OVAL SIZE FIRST DIMENSION SIDE SHOWN
- 12Ø — ROUND SIZE
- CONCENTRIC TRANSITION RECTANGULAR, ROUND OR OVAL
- ECCENTRIC TRANSITION RECTANGULAR, ROUND OR OVAL
- TRANSITION, RECTANGULAR TO ROUND OR OVAL
- UP — INCLINED RISE WITH RESPECT TO AIRFLOW RECTANGULAR, ROUND OR OVAL
- DN — INCLINED DROP WITH RESPECT TO AIRFLOW RECTANGULAR, ROUND OR OVAL
- ELBOW UP, RECTANGULAR SUPPLY OR OUTSIDE AIR
- ELBOW DOWN, RECTANGULAR SUPPLY OR OUTSIDE AIR
- ELBOW UP, RECTANGULAR RETURN
- ELBOW DOWN, RECTANGULAR RETURN
- ELBOW UP, RECTANGULAR EXHAUST
- ELBOW DOWN, RECTANGULAR EXHAUST
- ELBOW UP, ROUND (FLAT OVAL SIMILAR)
- ELBOW DOWN, ROUND (FLAT OVAL SIMILAR)
- SQUARE ELBOW W/ TURNING VANES, RECTANGULAR
- ELBOW, RECTANGULAR W/O TURNING VANES
- SMOOTH RADIUS ELBOW WITH SPLITTER VANES RECTANGULAR
- SMOOTH RADIUS ELBOW, RECTANGULAR
- ELBOW, ROUND OR FLAT OVAL
- DIVIDED FLOW FITTING, RECTANGULAR BRANCH AIRFLOW AT LEAST 25% OF MAIN
- TAP-IN BRANCH W/ VOLUME DAMPER RECTANGULAR MAIN AND BRANCH
- SPIN-IN STRAIGHT TAP W/ VOLUME DAMPER RECTANGULAR MAIN, ROUND OR FLAT OVAL BRANCH
- SPIN-IN CONICAL TAP W/ VOLUME DAMPER RECTANGULAR MAIN, ROUND OR FLAT OVAL BRANCH
- BRANCH, CONICAL LATERAL FITTING W/ VOLUME DAMPER ROUND OR FLAT OVAL MAIN AND BRANCH
- BRANCH, CONICAL TEE FITTING WITH VOLUME DAMPER ROUND OR FLAT OVAL MAIN AND BRANCH
- FLEXIBLE CONNECTION TO EQUIPMENT
- DUCT WITH LINER
- DUCT WITH FIRE WRAP
- VOLUME DAMPER
- B — BACKDRAFT DAMPER
- M — MOTORIZED DAMPER
- S — SMOKE DAMPER
- F — FIRE DAMPER
- FS — SMOKE/FIRE DAMPER
- DUCTWORK TO BE DEMOLISHED

3 DOUBLELINE DUCTWORK SYMBOLS
NO SCALE

- CONNECT TO EXISTING
- KEY NOTE
- REVISION TRIANGLE
- DATUM
- BREAK SYMBOL
- W 1 — DOMESTIC WATER RISER
- P 1 — WASTE RISER
- VARIABLE AIR VOLUME TERMINAL UNIT SHOWN WITH REQUIRED 3 DIAMETERS OF INLET DUCT
- VARIABLE AIR VOLUME TERMINAL UNIT WITH HEATING COIL SHOWN WITH REQUIRED 3 DIAMETERS OF INLET DUCT
- FAN-POWERED VARIABLE AIR VOLUME TERMINAL UNIT SHOWN WITH REQUIRED 3 DIAMETERS OF INLET DUCT AND LINED PLENUM RETURN DUCT
- FAN-POWERED VARIABLE AIR VOLUME TERMINAL UNIT WITH HEATING COIL SHOWN WITH REQUIRED 3 DIAMETERS OF INLET DUCT AND LINED PLENUM RETURN DUCT
- DUCT-MOUNTED COIL
- CEILING SUPPLY AIR DIFFUSER WITH BLANK OFF
- ROUND SUPPLY AIR DIFFUSER WITH ROUND NECK
- CEILING RETURN OR EXHAUST AIR GRILLE/REGISTER
- LINEAR SLOT SUPPLY AIR DIFFUSER OR RETURN AIR GRILLE/REGISTER
- SIDEWALL SUPPLY AIR OR RETURN AIR GRILLE/REGISTER
- SUPPLY OR OUTSIDE AIRFLOW DIRECTION ARROW
- RETURN, RELIEF OR TRANSFER AIRFLOW DIRECTION ARROW
- DEMOLISH EXISTING DUCT, PIPE OR EQUIPMENT INCLUDING SUPPORTS, ACCESSORIES AND RELATED CONTROLS AND COMPONENTS
- EXHAUST AIR DUCT UP TO EXHAUST FAN ON ROOF
- RELIEF AIR OR EXHAUST AIR DUCT UP TO ROOF VENT
- OUTSIDE AIR OR SUPPLY AIR DUCT UP TO ROOF VENT
- T — THERMOSTAT / TEMPERATURE SENSOR
- H — HUMIDISTAT / HUMIDITY SENSOR
- P — ROOM PRESSURE SENSOR AND MONITOR
- UNIT HEATER (VERTICAL)
- UNIT HEATER (HORIZONTAL)
- UNIT HEATER (CABINET)
- FAN COIL UNIT (HORIZONTAL)
- FAN COIL UNIT (VERTICAL)
- FTR A / 12.0 MBH — FINNED TUBE RADIATION OR CONVECTOR
- TYPE OF RADIATION AS SHOWN ON THE SCHEDULE
- CAPACITY OF ACTIVE LENGTH OF RADIATION
- PUMP
- FAN

- RG-1:24x12 / 400 CFM / (QTY. 2) — DIFFUSER, REGISTER AND GRILLE IDENTIFICATION
  - TYPE
  - NECK OR CONNECTION SIZE
  - AIR VOLUME (EACH)
  - QUANTITY (IF MORE THAN ONE)
- VAV / 0-0.00 — AIR TERMINAL UNIT
  - TYPE (VAV/RAV)
  - ID
  - LEVEL
  - RTU/AHU NUMBER
- TYPE-ID — EQUIPMENT
  - NUMBER
  - UNIT TYPE
- DET / SHT — SECTION SYMBOL
  - SECTION NUMBER
  - SHEET LOCATION

4 GENERAL SYMBOLS
NO SCALE

— — —	COLD WATER (CW)
— - —	HOT WATER (HW)
— - - —	RECIRCULATING HOT WATER (RHW)
NP	TEMPERATURE INDICATED AS NEEDED NON-POTABLE WATER
S	SOFT WATER
DW	DIALYSIS WATER
DA	DIALYSIS ACID
DE	DISTILLED WATER
DI	DEIONIZED WATER
RO	REVERSE OSMOSIS
W	SANITARY WASTE
SW	SPECIAL WASTE
AW	ACID WASTE
IW	INFLAMMABLE WASTE
PW	PUMPED WASTE (SEWAGE FORCED MAIN)
V	SANITARY VENT
SV	SPECIAL VENT
AV	ACID VENT
IV	INFLAMMABLE VENT
RW	STORM WATER / RAIN WATER
ORW	OVERFLOW STORM WATER / RAIN WATER
PS	PUMPED STORM (SEWAGE FORCED MAIN)
D	DRAIN
CD	CONDENSATE DRAIN
G	NATURAL GAS
IG	INTERRUPTIBLE GAS
PGA	PROPANE GAS AIR (PROPANE/AIR MIXTURE)
LPG	LIQUEFIED PROPANE GAS
LP	LIQUID PROPANE
A	COMPRESSED AIR
CDA	CLEAN DRY COMPRESSED AIR
LA	LABORATORY COMPRESSED AIR
LV	LABORATORY VACUUM
H2	HYDROGEN
LO2	LIQUID OXYGEN
LN2	LIQUID NITROGEN
LH2	LIQUID HYDROGEN
HPO2	HIGH PURITY OXYGEN
HPN2	HIGH PURITY NITROGEN
HPH2	HIGH PURITY HYDROGEN
HWS	HEATING WATER SUPPLY
HWR	HEATING WATER RETURN
HHWS	HIGH TEMPERATURE HEATING WATER SUPPLY
HHWR	HIGH TEMPERATURE HEATING WATER RETURN
CHWS	CHILLED WATER SUPPLY
CHWR	CHILLED WATER RETURN
CWS	CONDENSER WATER SUPPLY
CWR	CONDENSER WATER RETURN
LPS	LOW PRESSURE STEAM (15 PSIG AND BELOW)
LPR	LOW PRESSURE RETURN
HPS	HIGH PRESSURE STEAM (16 PSIG AND HIGHER)
HPR	HIGH PRESSURE RETURN
SV	STEAM VENT
PC	PUMPED CONDENSATE
GS	GLYCOL SUPPLY
GR	GLYCOL RETURN
RL	REFRIGERANT LIQUID
RS	REFRIGERANT SUCTION
HG	REFRIGERANT HOT GAS
FOF	FUEL OIL FILL
FOV	FUEL OIL VENT
FOS	FUEL OIL SUPPLY
FOR	FUEL OIL RETURN
FOT	FUEL OIL TRANSFER
GA	GAUGE LINE
HT	HEAT TRACING

5 PIPING DESIGNATIONS
NO SCALE

- ELBOW DOWN
- ELBOW UP
- TEE DOWN
- TEE UP
- FLOW DIRECTION
- SHUT-OFF VALVE
- BALANCING VALVE
- AUTOMATIC FLOW CONTROL VALVE
- VALVE IN VERTICAL PIPE
- CHECK VALVE (FLOW DIRECTION INDICATED)
- 2-WAY MODULATING CONTROL VALVE
- 3-WAY MODULATING CONTROL VALVE
- 2-WAY, 2-POSITION CONTROL VALVE
- 3-WAY, 2-POSITION CONTROL VALVE
- PRESSURE REDUCING VALVE
- REDUCED PRESSURE ZONE BACKFLOW PREVENTER
- RELIEF VALVE (ELEVATION)
- RELIEF VALVE (PLAN VIEW)
- FLOW MEASURING DEVICE
- STRAINER
- STRAINER W/ BLOWDOWN VALVE
- EXPANSION JOINT
- FLEXIBLE CONNECTION
- UNION
- PIPE ANCHOR
- PIPE GUIDE
- MANUAL AIR VENT
- ECCENTRIC REDUCER
- CONCENTRIC REDUCER
- SENSOR WELL
- TEST PLUG
- THERMOMETER
- P — PRESSURE GAUGE
- T — TEMPERATURE GAUGE
- CONNECTION
- CONNECTION (TOP)
- CONNECTION (BOTTOM)
- CLEANOUT
- HOSE BIBB (HB) OR WALL HYDRANT (WH)
- PITCH PIPE DOWN
- STEAM TRAP
- FLOOR DRAIN (FD)
- ROOF DRAIN (RD)
- AREA DRAIN (AD)
- FLOOR SINK (FS)
- TRENCH DRAIN (TD)

6 PIPING SYMBOLS
NO SCALE

Sheet List - Mechanical

Sheet Number	Sheet Name
M001	MECHANICAL SYMBOLS AND ABBREVIATIONS
M040	MECHANICAL SITE PLAN
M150	CUP MECHANICAL PLAN
M200	BASEMENT LEVEL MECHANICAL PLAN - DUCTWORK
M201	LEVEL 1 MECHANICAL PLAN - DUCTWORK
M300	BASEMENT LEVEL MECHANICAL PLAN - PIPING
M600	MECHANICAL SYSTEM DIAGRAMS - HOT WATER
M601	MECHANICAL SYSTEM DIAGRAMS - CHILLED WATER
M700	MECHANICAL DETAILS
M701	MECHANICAL DETAILS
M702	MECHANICAL DETAILS
M800	MECHANICAL SCHEDULES
M801	MECHANICAL SCHEDULES
M900	CONTROLS
M901	CONTROLS
M902	CONTROLS
M903	CONTROLS
M904	CONTROLS
M905	CONTROLS
M906	CONTROLS

HGA
333 East Erie Street
Milwaukee, Wisconsin 53202
Telephone 414.278.8200

ULINE
12575 Uline Drive
Pleasant Prairie, WI 53158

ULINE
SHIPPING SUPPLY SPECIALISTS

NO	DESCRIPTION	DATE
	CP-2	07/10/15

ISSUANCE HISTORY - THIS SHEET

HGA NO: 3595-001-00

MECHANICAL SYMBOLS AND ABBREVIATIONS

DATE: May 8, 2015

CONSTRUCTION DOCUMENTS

M001

© COPYRIGHT HAMMEL, GREEN AND ABRAHAMSON, INC.

C:\Users\gladam\Documents\Revit Local Files\M15-Uline Mechanical-3595001100_gladam-PC7131.rvt
7/10/2015 9:43:39 AM

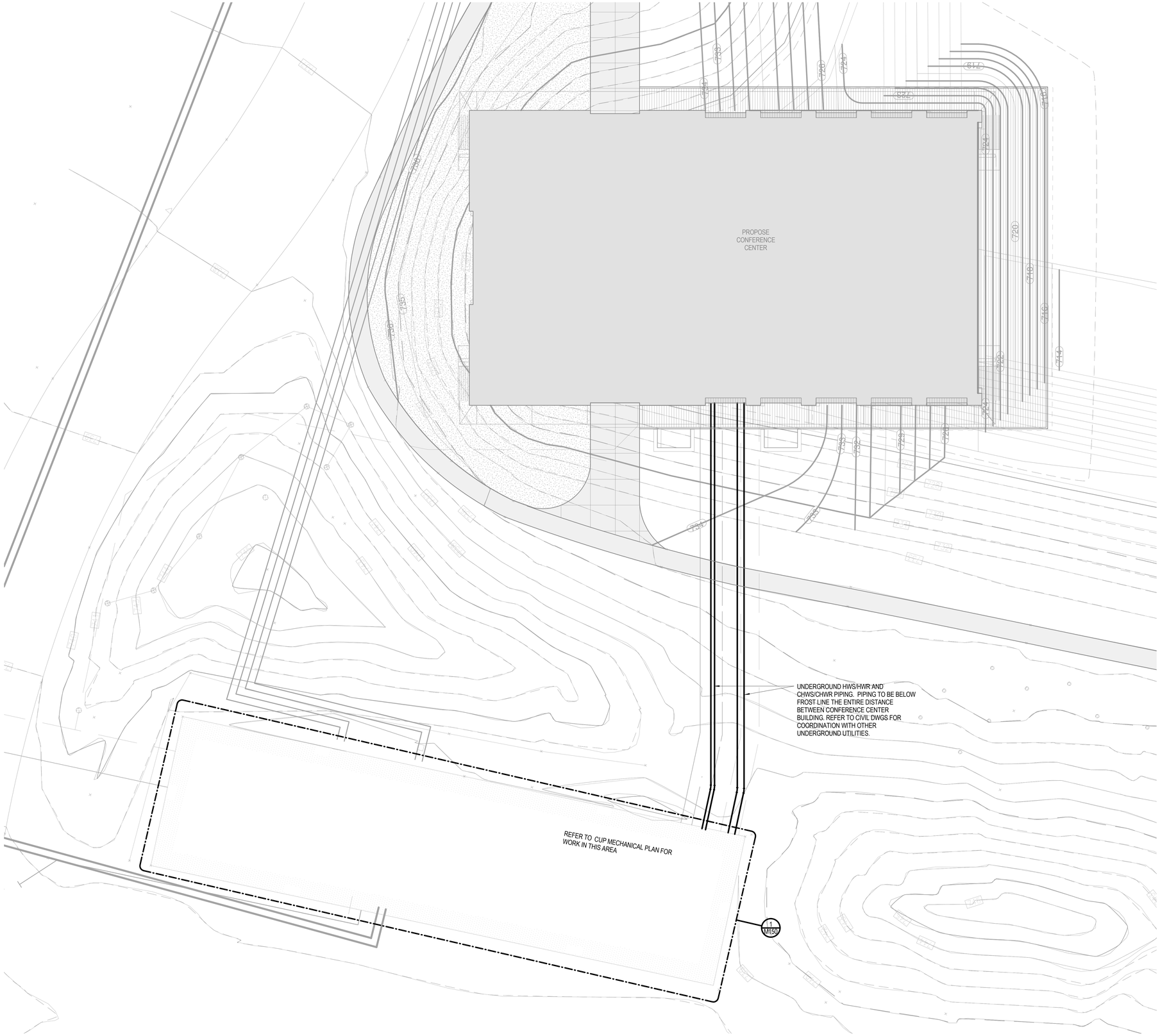

1 MECHANICAL SITE PLAN
3/32" = 1'-0"

333 East Erie Street
Milwaukee, Wisconsin 53202
Telephone 414.278.8200

ULINE
12575 Uline Drive
Pleasant Prairie, WI 53158

ULINE
SHIPPING SUPPLY SPECIALISTS

NO	DESCRIPTION	DATE
	CP-2	07/10/15

ISSUANCE HISTORY - THIS SHEET

HGA NO: 3595-001-00

MECHANICAL SITE PLAN

DATE: May 8, 2015

CONSTRUCTION DOCUMENTS

M040

© COPYRIGHT HAMMEL, GREEN AND ABRAHAMSON, INC.

C:\Users\gladam\Documents\Revit Local Files\M15-Uline Mechanical-3595001100_gladam-PC7131.rvt
7/10/2015 9:42:35 AM

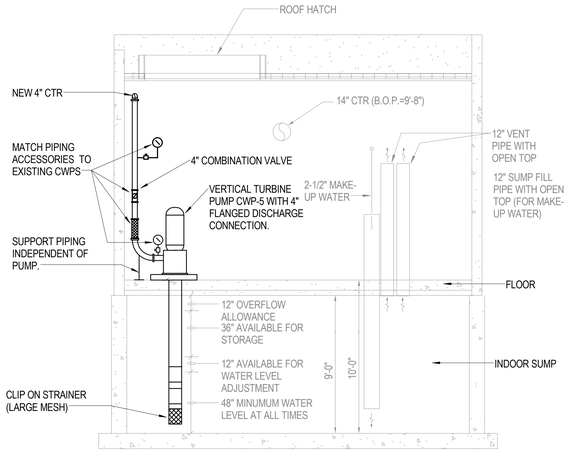

3 CWP-5 INSTALLATION
1/4" = 1'-0"

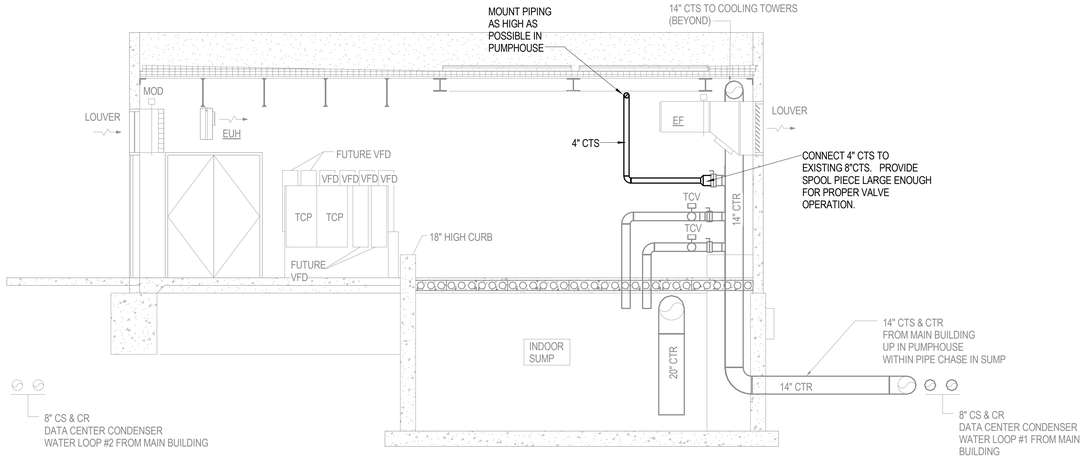

2 NEW PIPE CONNECTION
1/4" = 1'-0"

KEYNOTES: ##

1. CONNECT NEW 4" TO EXISTING CAPPED 8" ISOLATION VALVE SCHEDULED FOR FUTURE COOLING TOWER BYPASS.
2. CONNECT NEW 4" LINE INTO 8" EXG CAPPED CONNECTION.
3. MOUNT NEW CWP TO FUTURE PUMP SUMP PENETRATION.
4. FACTORY FABRICATED PACKAGED REMOTE BOILER/CHILLER PLANT. REFER TO MECH DETAILS.
5. AUTO FLOW CONTROL VALVE SET TO 191 GPM.

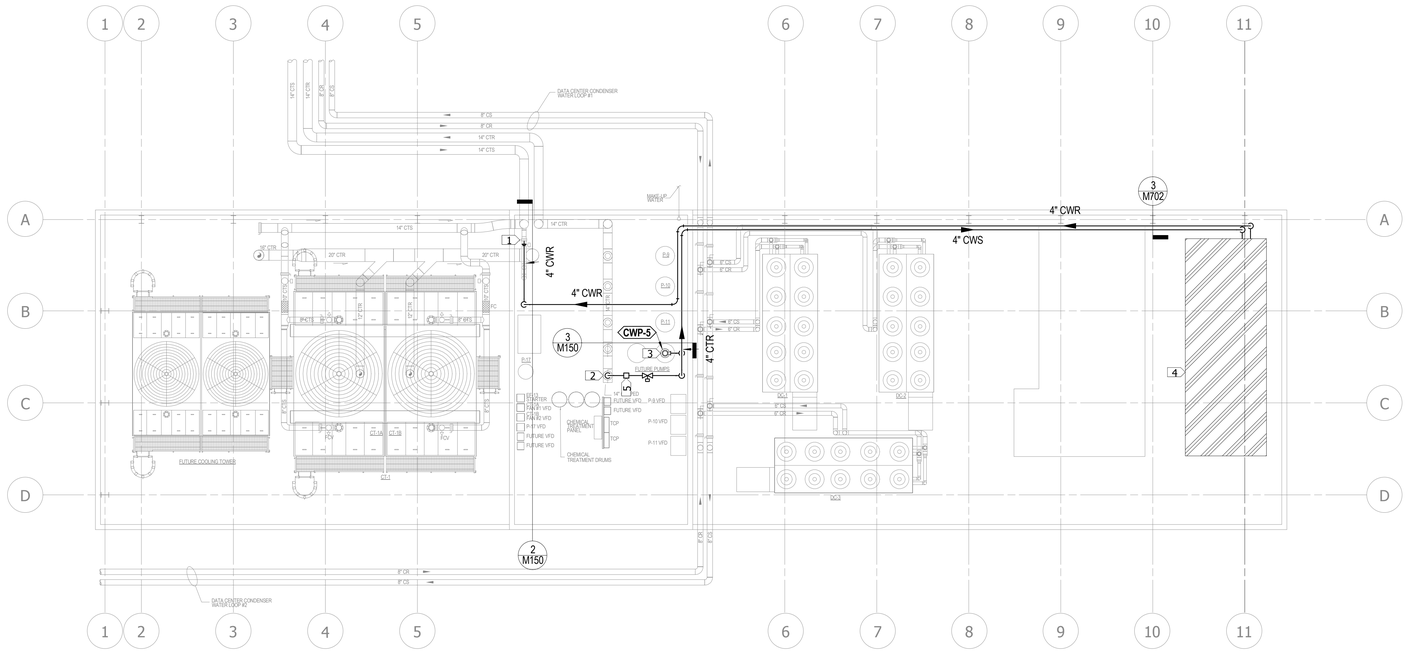

1 CUP MECHANICAL PLAN - PIPING
1/8" = 1'-0"

hga.
333 East Erie Street
Milwaukee, Wisconsin 53202
Telephone 414.278.8200

ULINE
SHIPPING SUPPLY SPECIALISTS

NO	DESCRIPTION	DATE
	CP-2	07/10/15

ISSUANCE HISTORY - THIS SHEET

HGA NO: 3595-001-00

CUP MECHANICAL PLAN

DATE: May 8, 2015

CONSTRUCTION DOCUMENTS

M150

ULINE
12575 Uline Drive
Pleasant Prairie, WI 53158

© COPYRIGHT HAMMEL, GREEN AND ABRAHAMSON, INC.

C:\Users\gladamr\Documents\Revit Local Files\M15-Uline Mechanical-3595001100_gladamr-PC7131.rvt
7/10/2015 9:43:38 AM

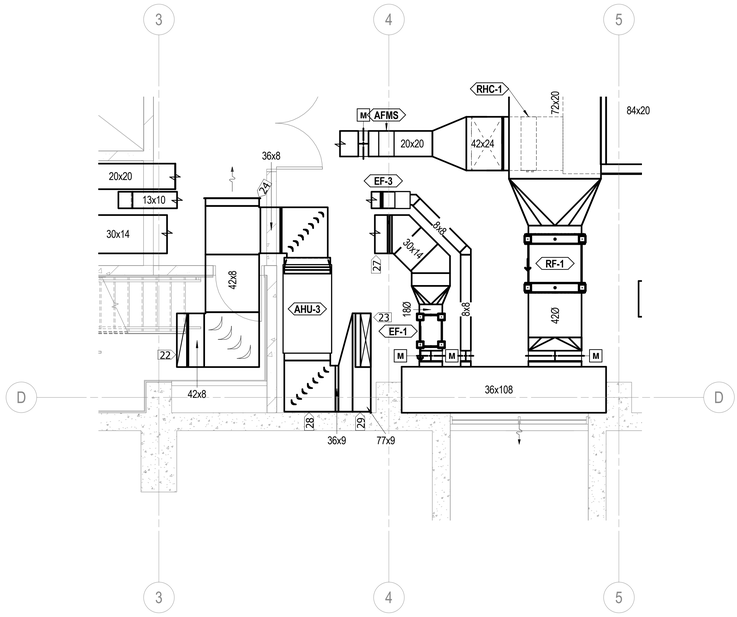

2 03 - BASEMENT LEVEL - DUCTWORK - Callout 1
1/4" = 1'-0"

1 BASEMENT LEVEL MECHANICAL PLAN - DUCTWORK
1/8" = 1'-0"

NEW CONSTRUCTION HVAC GENERAL NOTES:

A. ALL DUCT CONNECTIONS TO VAV BOXES SHALL BE THE SIZE OF THE VAV BOX CONNECTION UNLESS NOTED OTHERWISE.
B. PROVIDE VOLUME DAMPERS AT EACH TAKEOFF ON SUPPLY, EXHAUST, AND RETURN GRILLES AND DIFFUSERS.
C. COORDINATE WITH CEILING CONTRACTOR FOR EXACT LOCATION OF ALL SUPPLY DIFFUSERS & RETURN GRILLES LOCATED IN CEILINGS. COORDINATE ROUTING AND ELEVATION OF ALL DUCTWORK WTIH LIGHTING & CEILING ELEVATIONS. PROVIDE ALL NECESSARY OFFSETS IN DUCTWORK TO MAINTAIN CEILING ELEVATIONS. SEE ARCHITECTURAL REFLECTIVE CEIILING PLAN. EQUIPMENT, PIPING AND DUCTWORK IDENTIFICATION SHALL COMPLY WITH OWNERS EXISTING IDENTIFICATION SYSTEM.
D. DUCT DIMENSIONS SHOWN ARE INTERIOR DIMENSIONS. REFER TO MECHANICAL SPECIFICATIONS FOR APPLICABLE DUCT LINER AND DUCT INSULATION REQUIREMENTS.
E. VERTICAL S.A. DUCT RUNS DO NOT CONTAIN DUCT LINER, UNLESS OTHERWISE NOTED.

KEYNOTES: ##

1. 10" DIA. S.A. DUCT. BALANCE TO 270 CFM.
2. 22"X16" S.A. DUCT UP THROUGH FLOOR ABOVE.
3. 10" DIA. S.A. DUCT. BALANCE TO 305 CFM. TYPICAL FOR 12.
4. 53"X16" S.A. DUCT UP THROUGH FLOOR ABOVE.
5. 12" DIA. S.A. DUCT. BALANCE TO 430 CFM. TYPICAL FOR 10.
6. O.A.I LOUVER IN AREA WELL. PROVIDE 3' PLENUM ATTACHED ON BACK OF LOUVER. REFER TO MECH DETAILS.
7. EXH LOUVER IN AREA WELL. PROVIDE 3' PLENUM ATTACHED ON BACK OF LOUVER. REFER TO MECH DETAILS.
8. 19.5"X12" UP THROUGH FLOOR ABOVE.
9. NOT USED.
10. 53"X9" S.A. DUCT UP THROUGH FLOOR ABOVE.
11. 10" DIA. S.A. DUCT. BALANCE TO 225 CFM. TYPICAL FOR 2.
12. 14"X12" EXH. DUCT BELOW S.A. DUCT.
13. 10"X8" S.A. DUCT UP THROUGH FLOOR ABOVE.
14. 14"X12" EXH DUCT UP THROUGH FLOOR ABOVE.
15. R.A. VOLUME DAMPERS TO BE BALANCED EQUALLY.
16. 48"X24" AIR TRANSFER OPENING THROUGH WALL. OPENING TO BE ONE BLOCK COARSE ABOVE FLOOR. PROVIDE 48"X24" FILTER RACK ASSEMBLY WITH (2) 24"X24"X1" MERV 8 RATED FILTERS ON INTAKE. PROVIDE WIRE MESH SCREEN ON OUTLET SIDE.
17. 32"X32" AIR TRANSFER OPENING THROUGH WALL. KEEP TIGHT TO UNDERSIDE OF FLOOR STRUCTURE ABOVE. PROVIDE WIRE MESH SCREEN ON BOTH SIDES OF OPENING.
18. PROVIDE WIRE MESH SCREEN ON INTAKE OF EF-2.
19. 60"X16" R.A. DUCT UP THROUGH FLOOR ABOVE.
20. 90"X12" R.A. DUCT UP THROUGH FLOOR ABOVE.
21. 18"X18" S.A. DUCT UP THROUGH FLOOR ABOVE.
22. 8"X42" R.A. DUCT UP THROUGH FLOOR ABOVE. BOTTOM OF R.A. DUCT TO BE OPEN TO BASEMENT LEVEL.
23. 8"X42" S.A. DUCT UP THROUGH FLOOR ABOVE.
24. PROVIDE WIRE MESH SCREEN ON INLET.
25. 18"x18" E.A. DUCT UP THROUGH FLOOR ABOVE.
26. FIRE DAMPER LOCATED IN CEILING OF ELEVATOR ROOM (120). FIRE DAMPER SIZE SAME AS DUCT. PROVIDE WIRE MESH SCREEN ON INLET.
27. EXH DUCTWORK RISE UP ABOVE RETURN AIR DUCTWORK CONNECTED TO AHU-3.
28. TRANSITIONAL ELBOW FROM AHU-3 S.A. OUTLET. 36"X17" S.A. OUTLET TO CONNECT TO 77"X9" S.A. DUCT PLENUM.
29. 61"X9" S.A. DUCT UP THROUGH FLOOR ABOVE.
30. 10" DIA. S.A. DUCT. BALANCE TO 275 CFM. TYPICAL FOR 2.
31. S.A. DUCT OPEN OUTLET. BALANCE TO 360 CFM.

333 East Erie Street
Milwaukee, Wisconsin 53202
Telephone 414.278.8200

ULINE
12575 Uline Drive
Pleasant Prairie, WI 53158

ULINE
SHIPPING SUPPLY SPECIALISTS

NO	DESCRIPTION	DATE
	CP-2	07/10/15

ISSUANCE HISTORY - THIS SHEET

HGA NO: 3595-001-00

BASEMENT LEVEL MECHANICAL PLAN - DUCTWORK

DATE: May 8, 2015

CONSTRUCTION DOCUMENTS

M200

© COPYRIGHT HAMMEL, GREEN AND ABRAHAMSON, INC.

C:\Users\gladam\Documents\Revit Local Files\M15-Uline Mechanical-3595001100_gladam-PC7131.rvt
7/10/2015 9:43:44 AM

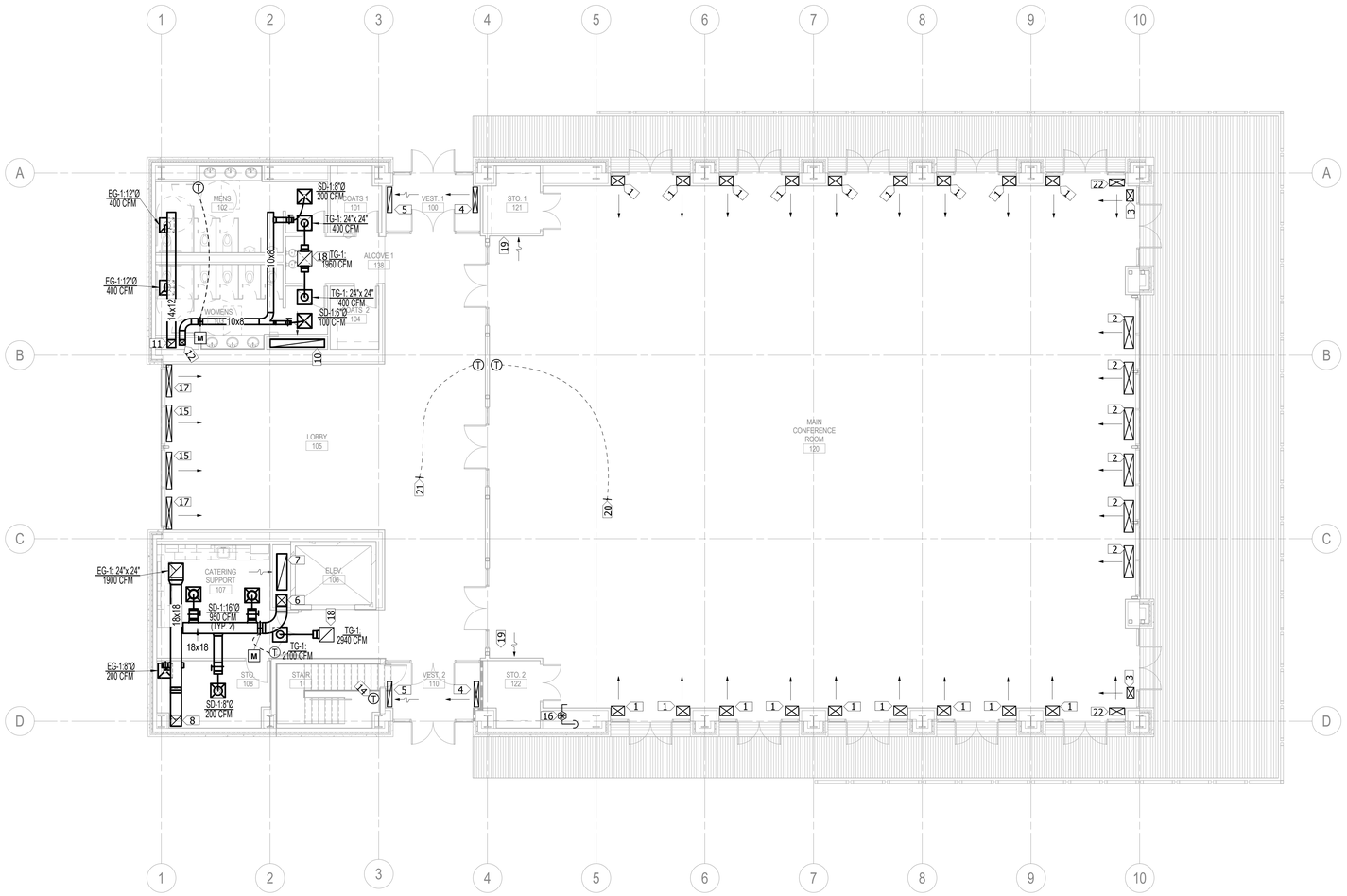

1 LEVEL 1 MECHANICAL PLAN - DUCTWORK
1/8" = 1'-0"

NEW CONSTRUCTION HVAC GENERAL NOTES:

A. ALL DUCT CONNECTIONS TO VAV BOXES SHALL BE THE SIZE OF THE VAV BOX CONNECTION UNLESS NOTED OTHERWISE.
B. PROVIDE VOLUME DAMPERS AT EACH TAKEOFF ON SUPPLY, EXHAUST, AND RETURN GRILLES AND DIFFUSERS.
C. COORDINATE WITH CEILING CONTRACTOR FOR EXACT LOCATION OF ALL SUPPLY DIFFUSERS & RETURN GRILLES LOCATED IN CEILINGS. COORDINATE ROUTING AND ELEVATION OF ALL DUCTWORK WTIH LIGHTING & CEILING ELEVATIONS. PROVIDE ALL NECESSARY OFFSETS IN DUCTWORK TO MAINTAIN CEILING ELEVATIONS. SEE ARCHITECTURAL REFLECTIVE CEILING PLAN. EQUIPMENT, PIPING AND DUCTWORK IDENTIFICATION SHALL COMPLY WITH OWNERS EXISTING IDENTIFICATION SYSTEM.
D. DUCT DIMENSIONS SHOWN ARE INTERIOR DIMENSIONS. REFER TO MECHANICAL SPECIFICATIONS FOR APPLICABLE DUCT LINER AND DUCT INSULATION REQUIREMENTS.
E. VERTICAL S.A. DUCT RUNS DO NOT CONTAIN DUCT LINER, UNLESS OTHERWISE NOTED.

KEYNOTES: ##

1. 22"X16" S.A. DUCT FROM BELOW. S.A. DUCT STOPS AT FLOOR AND CONNECTS TO LINEAR BAR GRILLE AT FLOOR. SEE ARCH DETAILS. S.A. GRILLE TO BE SG-1. REFER TO MECH SCHEDULES. BALANCE TO 430 CFM.
2. 53"X16" S.A. DUCT FROM BELOW. S.A. DUCT STOPS AT FLOOR AND CONNECTS TO LINEAR BAR GRILLE AT FLOOR. SEE ARCH DETAILS. S.A. GRILLE TO BE SG-1. REFER TO MECH SCHEDULES. BALANCE TO 610 CFM.
3. 19"X12" S.A. DUCT FROM BELOW. S.A. DUCT STOPS AT FLOOR AND CONNECTS TO LINEAR BAR GRILLE AT FLOOR. SEE ARCH DETAILS. S.A. GRILLE TO BE SG-1. REFER TO MECH SCHEDULES. BALANCE TO 270 CFM.
4. 8"X42" S.A DUCT UP FROM BELOW. S.A. DUCT STOPS AT FLOOR AND CONNECTS TO LINEAR BAR GRILLE AT FLOOR. S.A. GRILLE TO BE SG-2. REFER TO MECH SCHEDULE.
5. 8"X42" R.A. DUCT DOWN THROUGH FLOOR BELOW. R.A. DUCT GRILLE AT FLOOR. R.A. GRILLE TO BE RG-1. REFER TO MECH SCHEDULE.
6. 18"X18" S.A. DUCT UP FROM BELOW.
7. 60"X16" R.A. DUCT DOWN THROUGH CHASE.
8. 18"X16" EXH DUCT DOWN THROUGH FLOOR BELOW.
9. NOT USED.
10. 90"X12" R.A. DUCT DOWN THROUGH CHASE.
11. 14"X12" EXH DUCT DOWN THROUGH CHASE.
12. 10"X8" S.A. DUCT UP FROM BELOW.
13. NOT USED.
14. THERMOSTAT CONTROL WIRING ROUTED THROUGH STAIRWELL TO CUH-1.
15. 61"X9" S.A. DUCT FROM BELOW. S.A. DUCT STOPS AT FLOOR AND CONNECTS TO LINEAR BAR GRILLE AT FLOOR. SEE ARCH DETAILS. S.A. GRILLE TO BE SG-1. REFER TO MECH SCHEDULES. BALANCE TO 550 CFM.
16. INDOOR BUILDING PRESSURE PICK UP LOCATED HIGH IN WALL WITH TUBE FLUSH WITH SURFACE OF WALL.
17. 53"X9" S.A. DUCT FROM BELOW. S.A. DUCT STOPS AT FLOOR AND CONNECTS TO LINEAR BAR GRILLE AT FLOOR. SEE ARCH DETAILS. S.A. GRILLE TO BE SG-1. REFER TO MECH SCHEDULES. BALANCE TO 450 CFM.
18. TRANSFER AIR CONNECTION TO BE OPEN TO R.A. PLENUM ABOVE.
19. ARCHITECTURAL LOUVER.
20. THERMOSTAT CONTROL WIRING DOWN THROUGH FLOOR TO AHU-1 TEMPERATURE CONTROL PANEL.
21. THERMOSTAT CONTROL WIRING DOWN THROUGH FLOOR TO RHC-1 TEMPERATURE CONTROL PANEL.
22. 19"X12" S.A. DUCT FROM BELOW. S.A. DUCT STOPS AT FLOOR AND CONNECTS TO LINEAR BAR GRILLE AT FLOOR. SEE ARCH DETAILS. S.A. GRILLE TO BE SG-1. REFER TO MECH SCHEDULES. BALANCE TO 430 CFM.

333 East Erie Street
Milwaukee, Wisconsin 53202
Telephone 414.278.8200

ULINE
12575 Uline Drive
Pleasant Prairie, WI 53158

ULINE
SHIPPING SUPPLY SPECIALISTS

NO	DESCRIPTION	DATE
	CP-2	07/10/15

ISSUANCE HISTORY - THIS SHEET

HGA NO: 3595-001-00

LEVEL 1 MECHANICAL PLAN - DUCTWORK

DATE: May 8, 2015

CONSTRUCTION DOCUMENTS

M201

© COPYRIGHT HAMMEL, GREEN AND ABRAHAMSON, INC.

C:\Users\gladam\Documents\Revit Local Files\M15-Uline Mechanical-3595001100_gladam-PC7131.rvt
7/10/2015 9:43:50 AM

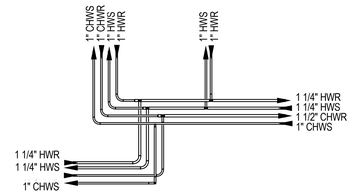

3 ENLARGED PIPING PLAN
1/4" = 1'-0"

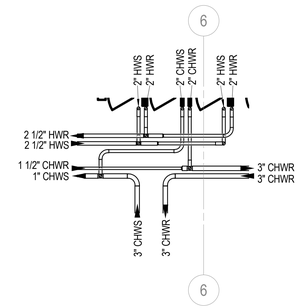

2 ENLARGED PIPING PLAN
1/4" = 1'-0"

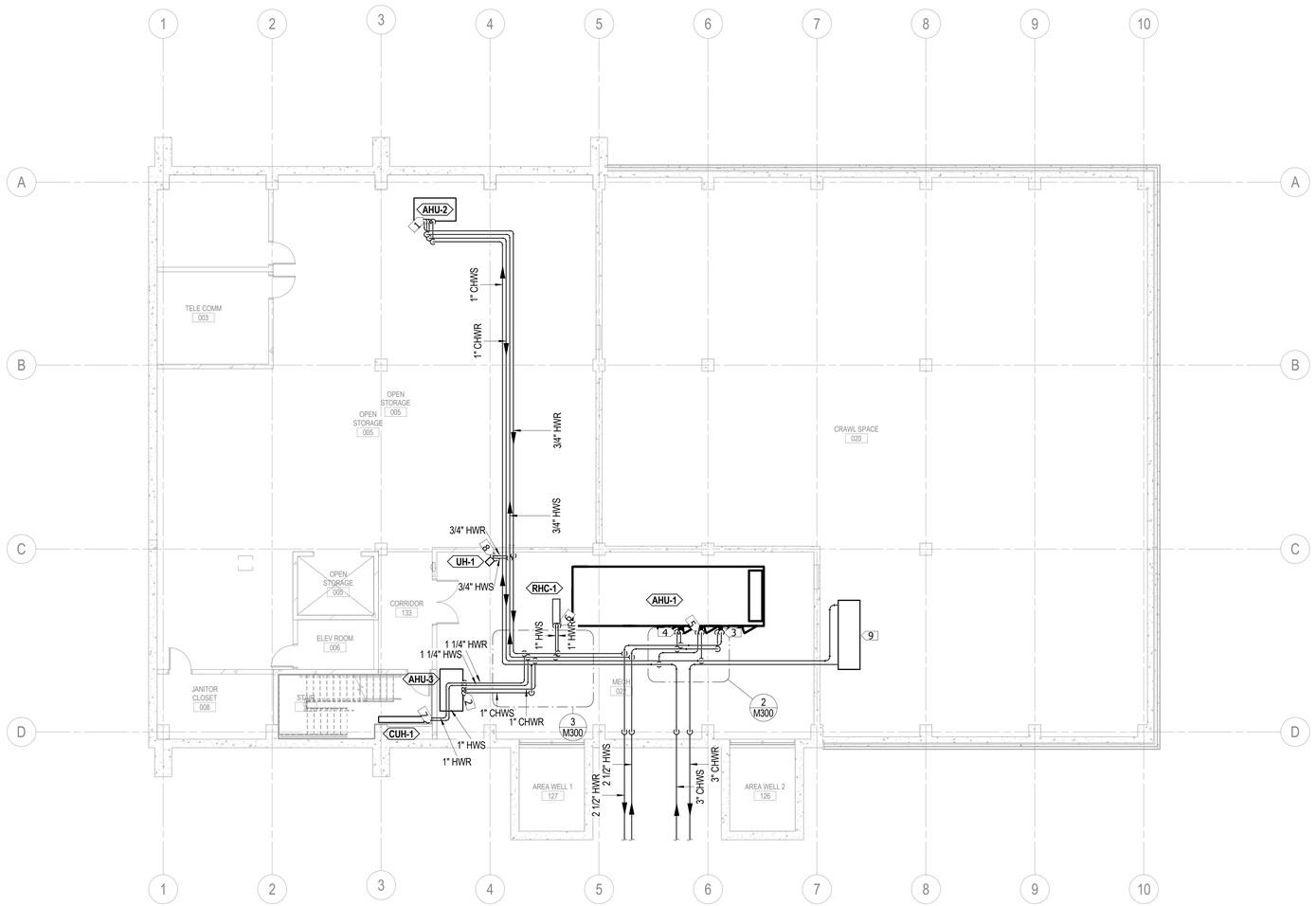

1 BASEMENT LEVEL MECHANICAL PLAN - PIPING
1/8" = 1'-0"

NEW CONSTRUCTION PIPING GENERAL NOTES:

A. ALL HYDRONIC WATER PIPING IS TO BE 3/4-INCH MINIMUM PIPE SIZE UNLESS NOTED OTHERWISE.
B. PIPE ELBOWS SHALL BE LONG RADIUS TYPE.

KEYNOTES: ##

1. 3/4" HWS/R AND 3/4" CHWS/R PIPES DOWN TO AHU-2 COIL CONNECTIONS.
2. 3/4" HWS/R AND 3/4" CHWS/R PIPES DOWN TO AHU-3 COIL CONNECTIONS.
3. 2" HWS/R PIPES DOWN TO HC-1 CONNECTIONS.
4. 2" HWS/R PIPES DOWN TO RHC-2 CONNECTIONS.
5. 1 - 1/2" CHWS/R PIPES DOWN TO CC-1 CONNECTIONS.
6. 1" HWS/R PIPES DOWN TO RHC-1 CONNECTIONS.
7. 1" HWS/R PIPES DOWN TO CUH-1 CONNECTIONS.
8. 3/4" HWS/R PIPES DOWN TO UH-1 CONNECTIONS.
9. CHILLED WATER BUFFER TANK WITH 3' DIAMETER. BUFFER TANK TO HOLD 550 GALLONS TO PROVIDE 5 MINUTE PERIOD BETWEEN REMOTE PLANT AND BUILDING.

HGA
333 East Erie Street
Milwaukee, Wisconsin 53202
Telephone 414.278.8200

ULINE
12575 Uline Drive
Pleasant Prairie, WI 53158

ULINE
SHIPPING SUPPLY SPECIALISTS

NO	DESCRIPTION	DATE
	CP-2	07/10/15

ISSUANCE HISTORY - THIS SHEET

HGA NO: 3595-001-00

BASEMENT LEVEL MECHANICAL PLAN - PIPING

DATE: May 8, 2015

CONSTRUCTION DOCUMENTS

M300

© COPYRIGHT HAMMEL, GREEN AND ABRAHAMSON, INC.

7/10/2015 9:43:55 AM C:\Users\jladamr\Documents\Revit Local Files\M15-Uline Mechanical-3595001100_jladamr-PC7131.rvt

hga.
420 5th Street North, Suite 100
Minneapolis, Minnesota 55401
Telephone 612.758.4000

ULINE
12575 Uline Drive
Pleasant Prairie, WI 53158

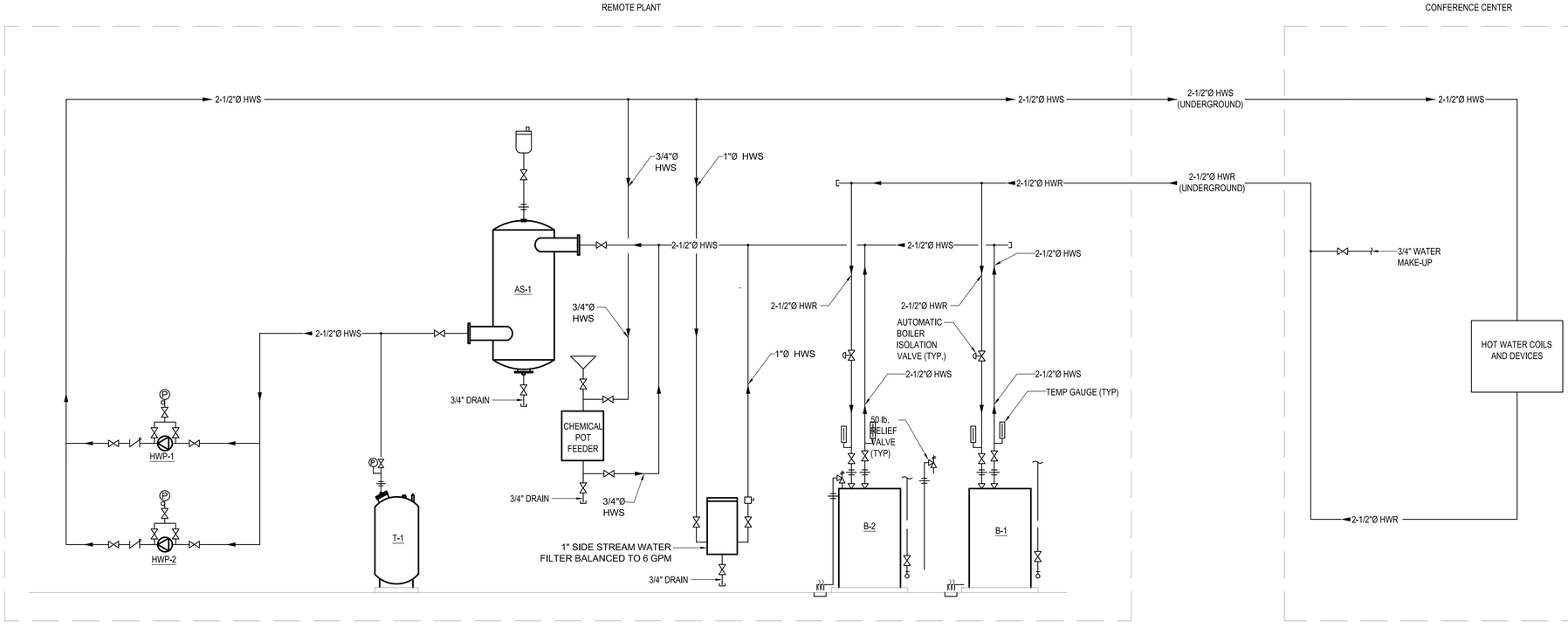

1 HOT WATER SYSTEM SCHEMATIC
NTS

NO	DESCRIPTION	DATE
	CP-2	07/10/15

ISSUANCE HISTORY - THIS SHEET

HGA NO: 3595-001-00

MECHANICAL SYSTEM DIAGRAMS - HOT WATER

DATE: May 8, 2015

CONSTRUCTION DOCUMENTS

M600

©COPYRIGHT HAMMEL, GREEN AND ABRAHAMSON, INC.

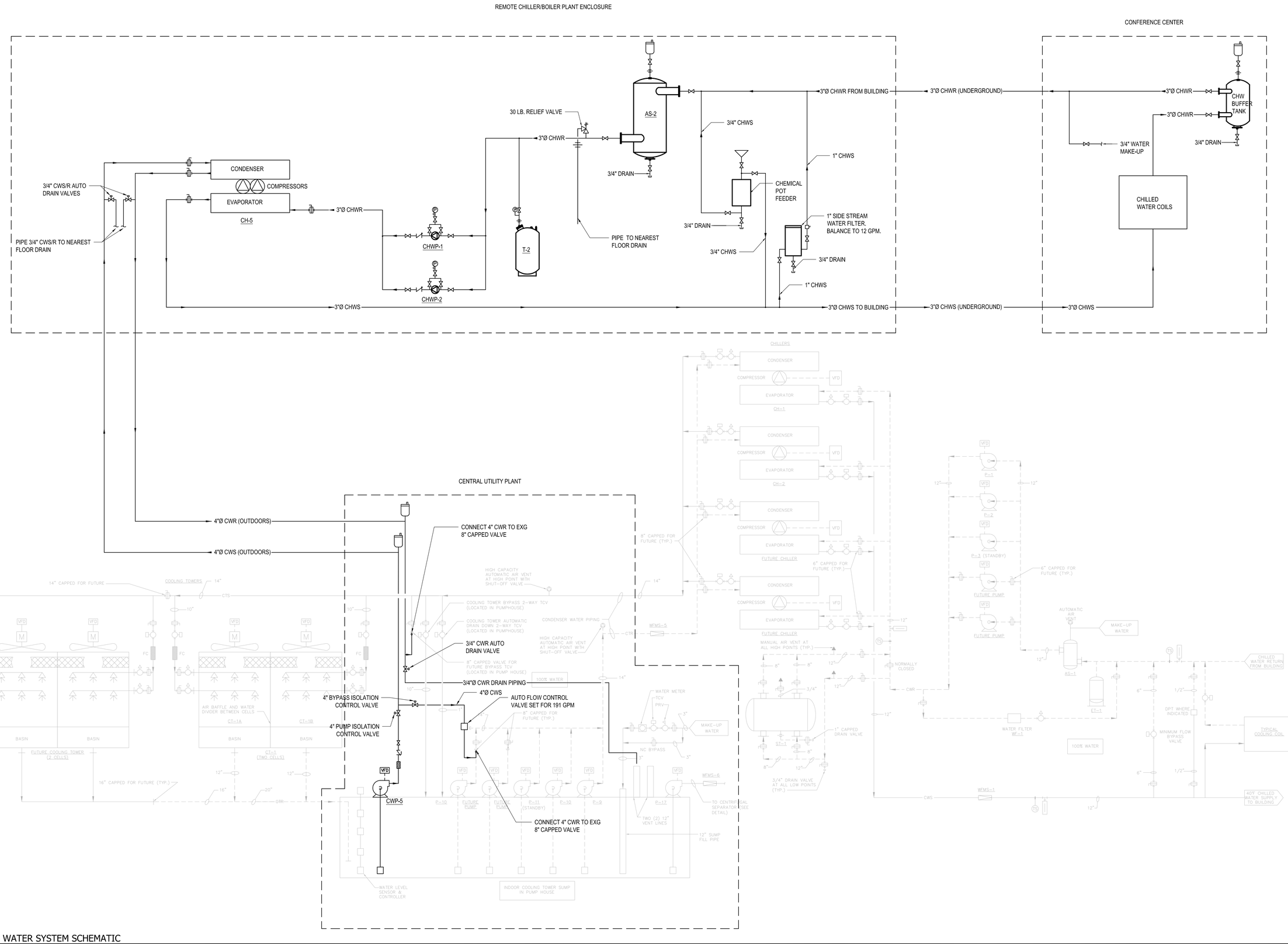

1 CHILLED WATER SYSTEM SCHEMATIC
NTS

hga.
420 5th Street North, Suite 100
Minneapolis, Minnesota 55401
Telephone 612.758.4000

ULINE
12575 Uline Drive
Pleasant Prairie, WI 53158

ULINE
SHIPPING SUPPLY SPECIALISTS

NO	DESCRIPTION	DATE
	CP-2	07/10/15

ISSUANCE HISTORY - THIS SHEET

HGA NO: 3595-001-00

MECHANICAL SYSTEM DIAGRAMS - CHILLED WATER

DATE: May 8, 2015

CONSTRUCTION DOCUMENTS

M601

©COPYRIGHT HAMMEL, GREEN AND ABRAHAMSON, INC.

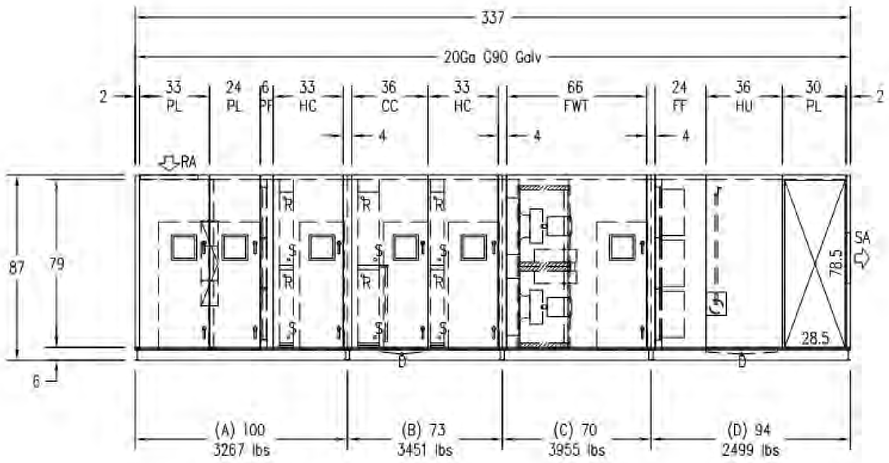

11 AHU-1 - ELEVATION VIEW
NTS

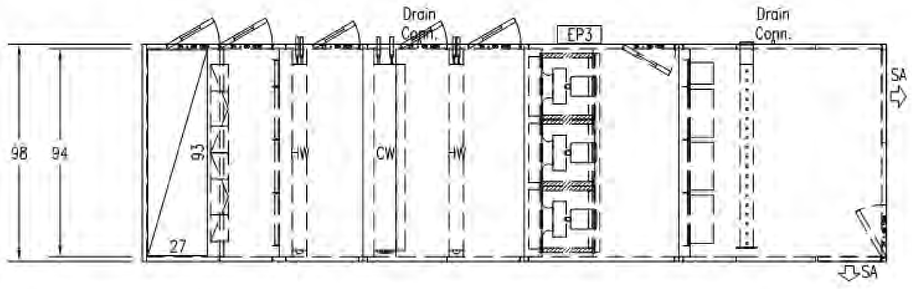

10 AHU-1 - PLAN VIEW
NTS

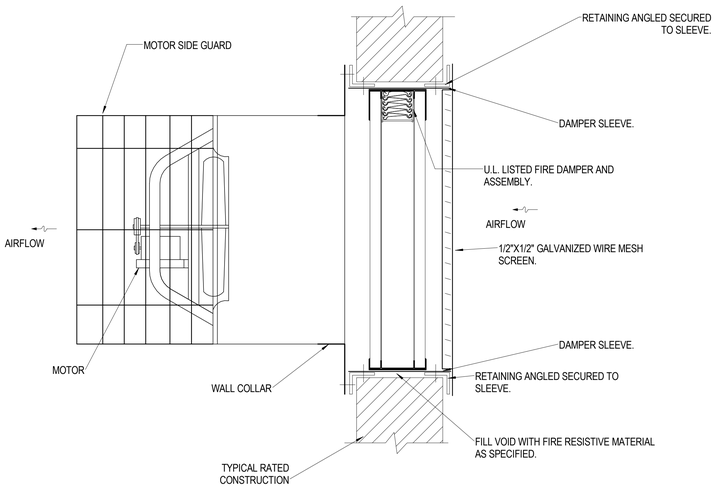

9 WALL MOUNTED EXHAUST FAN
NTS

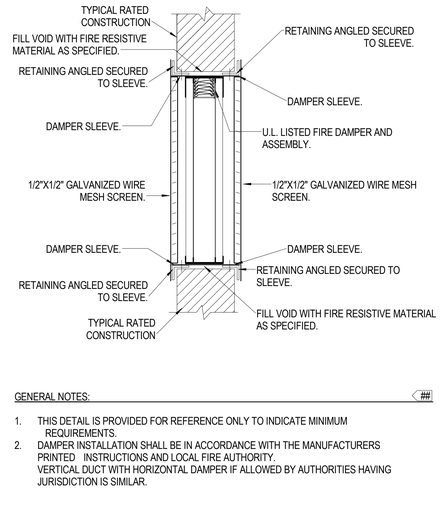

GENERAL NOTES: ##

1. THIS DETAIL IS PROVIDED FOR REFERENCE ONLY TO INDICATE MINIMUM REQUIREMENTS.
2. DAMPER INSTALLATION SHALL BE IN ACCORDANCE WITH THE MANUFACTURERS PRINTED INSTRUCTIONS AND LOCAL FIRE AUTHORITY. VERTICAL DUCT WITH HORIZONTAL DAMPER IF ALLOWED BY AUTHORITIES HAVING JURISDICTION IS SIMILAR.

8 FIRE DAMPER WITH WM SCREEN
NTS

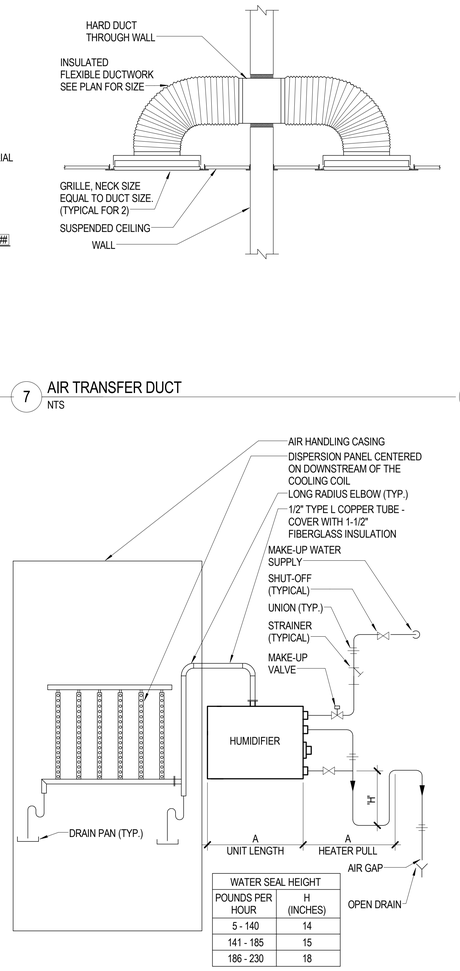

7 AIR TRANSFER DUCT
NTS

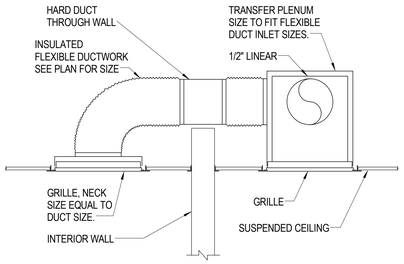

6 AIR TRANSFER DUCT
NTS

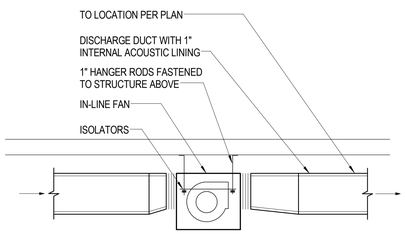

5 IN-LINE CABINET FAN
NTS

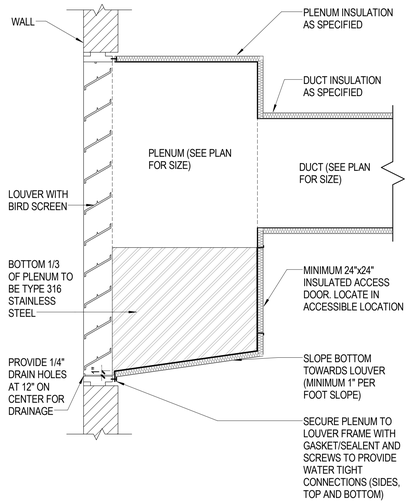

3 PLENUM DETAIL (DRAIN TO EXTERIOR)
NTS

WATER SEAL HEIGHT	
POUNDS PER HOUR	H (INCHES)
5 - 140	14
141 - 185	15
186 - 230	18

2 ELECTRIC MULTIPLE DISPERSION PANEL HUMIDIFIER
NTS

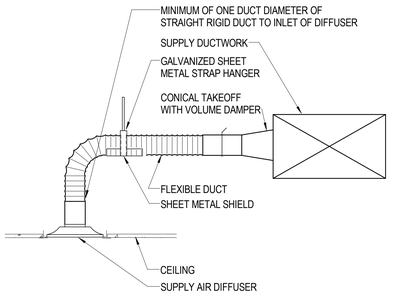

GENERAL NOTES:

A. PROVIDE GALVANIZED SHEET METAL HANGER AND SHIELD ON FLEXIBLE DUCT LENGTHS GREATER THAN 5'-0".

1 DUCT CONNECTION TO CEILING DIFFUSER
NTS

333 East Erie Street
Milwaukee, Wisconsin 53202
Telephone 414.278.8200

ULINE
12575 Uline Drive
Pleasant Prairie, WI 53158

ULINE
SHIPPING SUPPLY SPECIALISTS

NO	DESCRIPTION	DATE
	CP-2	07/10/15

ISSUANCE HISTORY - THIS SHEET

HGA NO: 3595-001-00

MECHANICAL DETAILS

DATE: May 8, 2015

CONSTRUCTION DOCUMENTS

M700

© COPYRIGHT HAMMEL, GREEN AND ABRAHAMSON, INC.

7/10/2015 9:43:58 AM C:\Users\gladamr\Documents\Revit Local Files\M15-Uline Mechanical-359500100_gladamr.PC7131.rvt

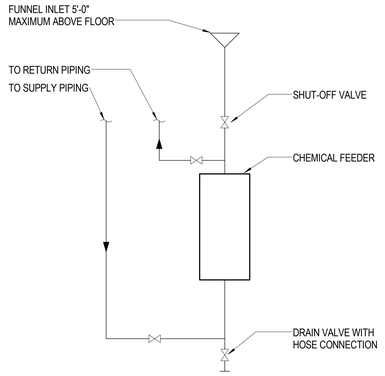

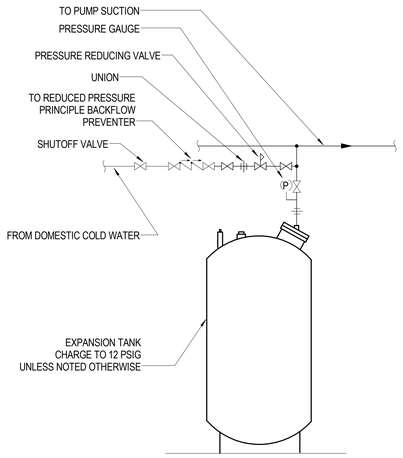

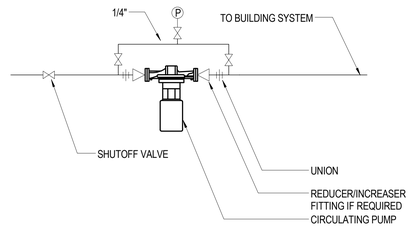

GENERAL NOTES:

A. ALL VALVES AND FITTINGS TO BE PIPE SIZE, NOT PUMP INLET AND OUTLET SIZE.

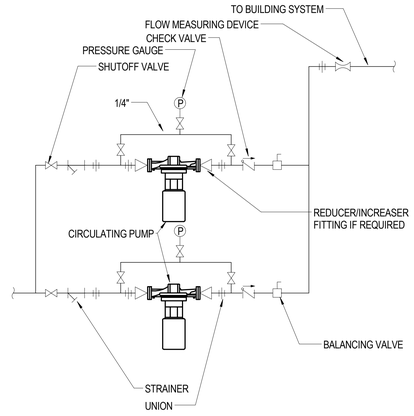

GENERAL NOTES:

A. ALL VALVES AND FITTINGS TO BE PIPE SIZE, NOT PUMP INLET AND OUTLET SIZE.

12 BYPASS CHEMICAL FEEDER
NTS

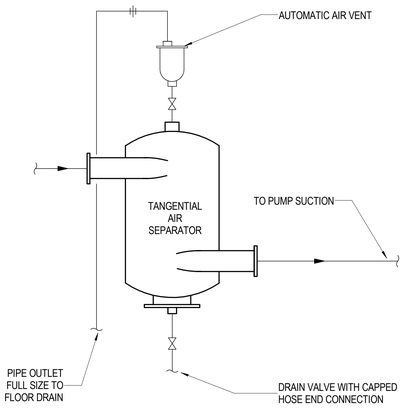

11 DIAPHRAGM EXPANSION TANK
NTS

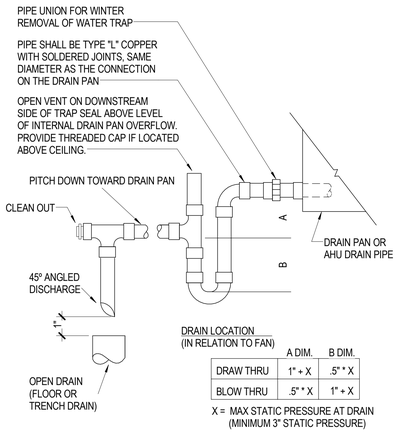

DRAIN LOCATION
(IN RELATION TO FAN)

	A DIM.	B DIM.
DRAW THRU	1" + X	.5" * X
BLOW THRU	.5" * X	1" + X

X = MAX STATIC PRESSURE AT DRAIN
(MINIMUM 3" STATIC PRESSURE)

10 SECONDARY CIRCULATING PUMP
NTS

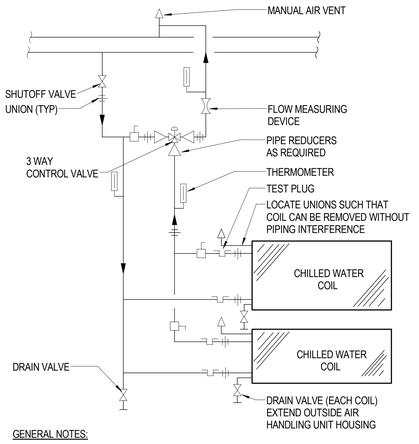

GENERAL NOTES:

A. COILS AND PIPING SHALL BE ARRANGED TO BE FULLY DRAINABLE.
B. VERTICAL PIPING SHALL BE OFFSET SUCH THAT COILS CAN BE REMOVED WITHOUT INTERFERENCE.
C. VALVES AND PIPING SPECIALTIES SHALL BE LOCATED SUCH THAT THEY ARE FULLY ACCESSIBLE.

9 DUPLEX INLINE CIRCULATING PUMPS
NTS

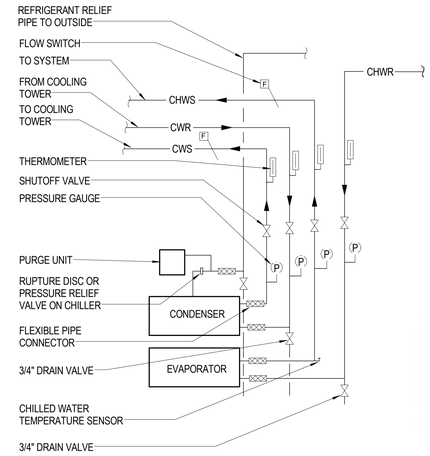

GENERAL NOTES:

A. PIPE ABD SPECIALTIES INSTALLED PER MANUFACTURER'S RECOMMENDATIONS.

8 AIR SEPARATOR
NTS

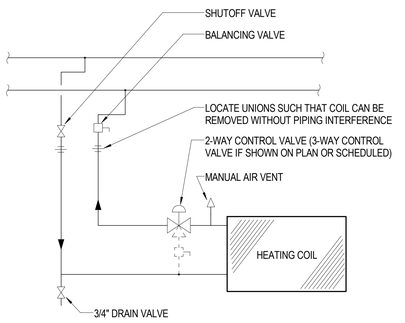

7 COOLING COIL DRAIN PIPING AND TRAP
NTS

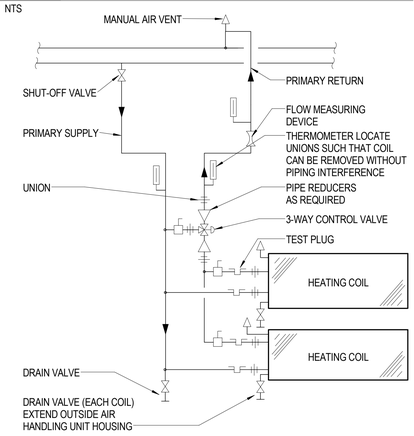

DESIGNER NOTES:

A. COILS AND PIPING SHALL BE ARRANGED TO BE FULLY DRAINABLE.
B. VERTICAL PIPING SHALL BE OFFSET SUCH THAT COILS CAN BE REMOVED WITHOUT INTERFERENCE.
C. PUMP, VALVES, AND PIPING SPECIALTIES SHALL BE LOCATED SUCH THAT THEY ARE FULLY ACCESSIBLE.
D. ARRANGEMENT SHOWN IS FOR TWO COILS BUT IS APPLICABLE FOR TWO OR MORE COILS.
E. COIL PIPING DETAIL FOR PRIMARY / SECONDARY PIPING SYSTEMS.

6 CHILLED WATER COOLING COIL PIPING
NTS

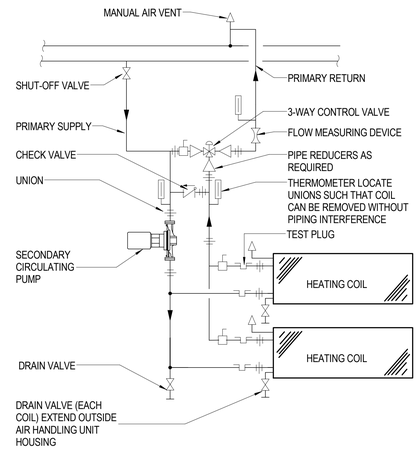

5 CHILLER PIPING
NTS

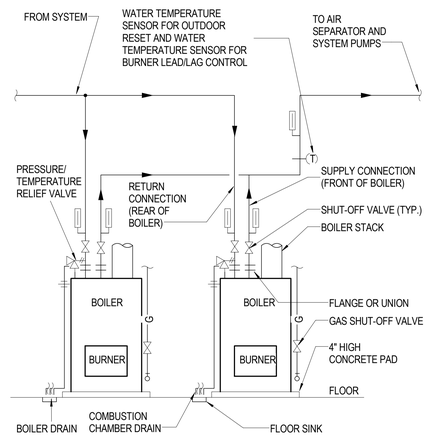

GENERAL NOTES:

A. PIPE PRESSURE/TEMPERATURE RELIEF VALVES AND BOILER DRAINS FULL SIZE TO FLOOR DRAINS.
B. PROVIDE UNIONS FOR PIPE REMOVAL TO ALLOW EASY ACCESS TO SERVICE SIDE OF BOILER.

4 HOT WATER DUCT COIL PIPING
NTS

3 MULTIPLE HOT WATER HEATING COIL PIPING
NTS

2 MULTIPLE HOT WATER HEATING COIL
NTS

1 WATER TUBE BOILERS
NTS

hga
333 East Erie Street
Milwaukee, Wisconsin 53202
Telephone 414.278.8200

ULINE
12575 Uline Drive
Pleasant Prairie, WI 53158

ULINE
SHIPPING SUPPLY SPECIALISTS

NO	DESCRIPTION	DATE
	CP-2	07/10/15

ISSUANCE HISTORY - THIS SHEET

HGA NO: 3595-001-00

MECHANICAL DETAILS

DATE: May 8, 2015

CONSTRUCTION DOCUMENTS

M701

© COPYRIGHT HAMMEL, GREEN AND ABRAHAMSON, INC.

7/10/2015 9:44:01 AM C:\Users\gladam\Documents\Revit Local Files\M15-Uline Mechanical-3595001100_gladam-PC7131.rvt

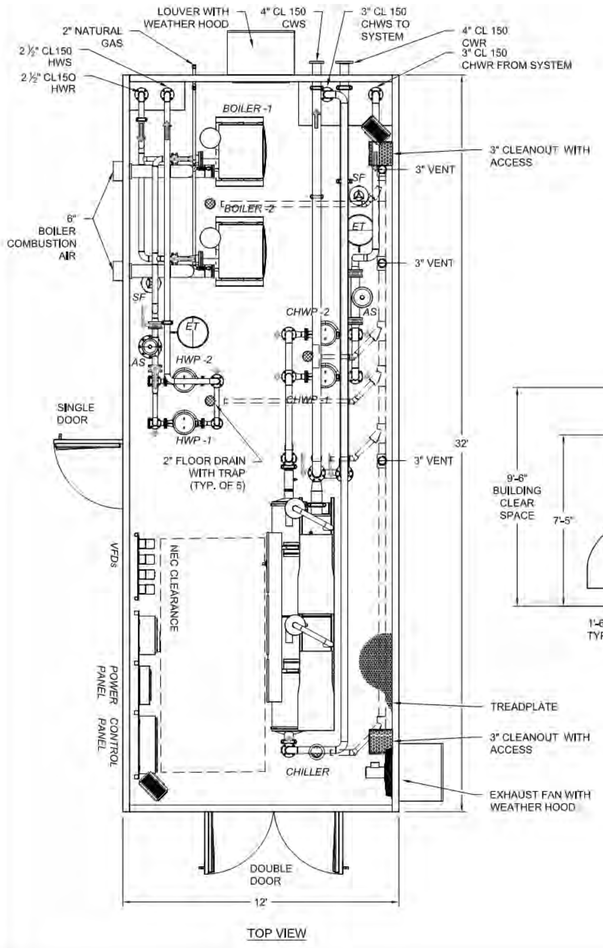

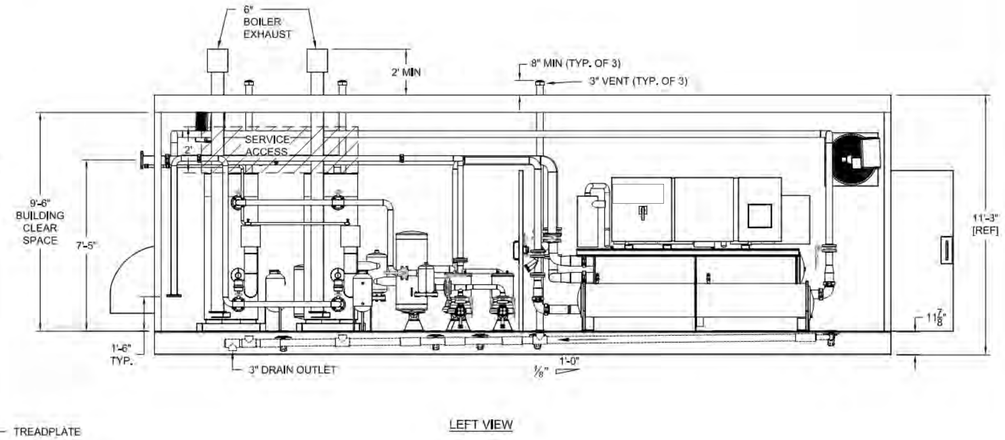

4 REMOTE PLANT
1 1/2" = 1'-0"

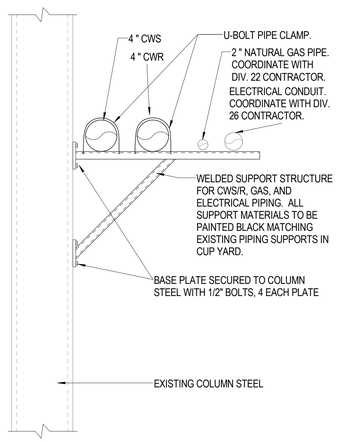

DESIGNER NOTES:

A. COORDINATE FLASHING WITH ARCHITECTURAL.
B. HEAVY DUTY.

3 CW PIPING SUPPORT
NTS

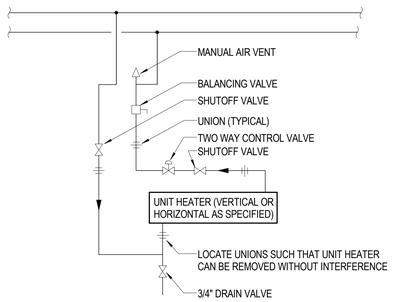

2 HOT WATER UNIT HEATER
NTS

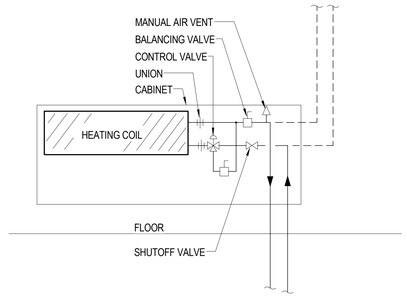

1 HOT WATER CABINET UNIT HEATER PIPING
NTS

hga.
333 East Erie Street
Milwaukee, Wisconsin 53202
Telephone 414.278.8200

ULINE
12575 Uline Drive
Pleasant Prairie, WI 53158

ULINE
SHIPPING SUPPLY SPECIALISTS

NO	DESCRIPTION	DATE
	CP-2	07/10/15

ISSUANCE HISTORY - THIS SHEET

HGA NO: 3595-001-00

MECHANICAL DETAILS

DATE: May 8, 2015

CONSTRUCTION DOCUMENTS

M702

© COPYRIGHT HAMMEL, GREEN AND ABRAHAMSON, INC.

7/10/2015 9:44:03 AM C:\Users\gladam\Documents\Revit Local Files\M15-Uline Mechanical-3595001100_gladam-PC7131.rvt

hga.
420 5th Street North, Suite 100
Minneapolis, Minnesota 55401
Telephone 612.758.4000

AIR HANDLING UNIT SCHEDULE (AHU)

TAG	AREA SERVED	LOCATION	SUPPLY CFM	MIN OAI CFM	SUPPLY FAN	RETURN FAN	COOLING COIL	HEATING COIL	HUMIDIFIER	FILTER	MANUFACTURER	MODEL	NOTES
AHU-1	BUILDING	MECH (113)	19,000	3,600	SF-1	-	CC-1	HC-1	H-1	FF-1A, FF-1B	TEMTROL	-	1
AHU-2	VESTIBULE (105)	OPEN STORAGE (112)	1,000	-	SF-2	-	CC-2	HC-2	-	FF-2	GEEENHECK	MSCF-30-BI-4	1
AHU-3	VESTIBULE (108)	MECH (113)	1,000	-	SF-3	-	CC-3	HC-3	-	FF-3	GREENHECK	MSCF-30-BI-4	1

NOTES: 1. FACTORY FABRICATED AIR HANDLING UNIT.

CONDENSING BOILER SCHEDULE (B)

TAG	LOCATION	INPUT CAP (MBH)	OUTPUT CAP (MBH)	MIN EFF (%)	DESIGN PRSSURE (PSI)	OPERATING PRESSURE (PSI)	EWT (DEG F)	LWT (DEG F)	FLOW RATE (GPM)	WPD (PSI)	WATER CAP (GAL)	RELIEF VALVE (PSI)	BURNER MOD RATIO	NATURAL GAS/PROPANE			MANUFACTURER	MODEL	NOTES
														(CFH)	PRESS (PSI)	INLET (IN)			
B-1	REMOTE PLANT	750	653	93	160	20	120	140	31	3	16.25	50	15:1	900	0.5	1.5	AERCO	BMK 750	1,2
B-2	REMOTE PLANT	750	653	93	160	20	120	140	31	3	16.25	50	15:1	900	0.5	1.5	AERCO	BMK 750	1,2

NOTES: 1. SEE ELECTRICAL MOTOR SCHEDULES OR PLANS FOR VOLTAGE AND PHASING INFORMATION.
2. BOILER TO BE LOCATD IN REMOTE CHILLER/BOILER ENCLOSURE IN CUP.

WATER COOLED CHILLER SCHEDULE (CH)

TAG	LOCATION	COOLING CAPACITY			EVAPORATOR CONDITIONS					CONDENSER CONDITIONS					FOULING FACTOR	MANUFACTURER	MODEL	NOTES
		TONS	KW	KW/TON	NO. OF PASSES	EWT (DEG F)	LWT (DEG F)	FLOW (GPM)	WPD (FT WG)	NO. OF PASSES	EWT (DEG F)	LWT (DEG F)	FLOW (GPM)	WPD (FT WG)				
CH-5	REMOTE PLANT	120	100.5	0.762	3	69.7	44.0	123.0	12.20	-	85.0	105.0	191.0	5.90	0.00050	TRANE	RTWD-120	1

NOTES: 1. SEE ELECTRICAL MOTOR SCHEDULES OR PLANS FOR VOLTAGE AND PHASING INFORMATION.

SUPPLY FAN SCHEDULE (SF)

TAG	LOCATION	MAX SUPPLY (CFM)	MIN SUPPLY (CFM)	TSP (IN WG)	ESP (IN WG)	FAN MOTOR (HP)	FAN SPEED (RPM)	FAN TYPE	MANUFACTURER	MODEL	NOTES
SF-1	AHU-1	19,000	9,500	4.66	2.00	21.00	2,603	PLUG	TEMTROL	-	1,2,3
SF-2	AHU-2	1,000	500	0.40	0.25	0.25	1,081	PLUG	GREENHECK	MSCF	1,3
SF-3	AHU-3	1,000	500	0.40	0.25	0.25	1,081	PLUG	GREENHECK	MSCF	1,3

NOTES: 1. SEE ELECTRICAL MOTOR SCHEDULES OR PLANS FOR VOLTAGE AND PHASING INFORMATION.
2. SUPPLY FAN CONSISTS OF 6 FANS MOUNTED IN A 3 x 2 ARRAY EACH HAVING A 3.5 HP MOTOR.
3. FAN TO OPERATE WITH VSD CONTROLLER.

RELIEF FAN SCHEDULE (RF)

TAG	LOCATION	SERVICE	CAPACITY (CFM)	ESP (IN WG)	MOTOR HP	FAN RPM	FAN TYPE	MANUFACTURER	MODEL	NOTES
RF-1	MECH (113)	AHU-1	15,000	0.8	10	839	INLINE MIXED FLOW	GREENHECK	QEID-30-100-B100	1,2

NOTES: 1. SEE ELECTRICAL MOTOR SCHEDULES OR PLANS FOR VOLTAGE AND PHASING INFORMATION.
2. FAN TO OPERATE WITH VSD CONTROLLER.

EXHAUST FAN SCHEDULE (EF)

TAG	LOCATION	SERVICE	CAPACITY (CFM)	ESP (IN WG)	MOTOR (HP)	FAN SPEED (RPM)	FAN TYPE	MANUFACTURER	MODEL	NOTES
EF-1	MECH (113)	TOILET & WARMING KITCHEN EXHAUST	3,100	0.80	1.5	2,580	INLINE MIXED FLOW	GREENHECK	QEID-12-100-A15	1,2
EF-2	OPEN STORAGE (112)	ELEC (115) & TELE COMM (116)	3,000	0.3	0.75	1,354	WALL PROPELLER	GREENHECK	SS1-18-429-A7	1,2
EF-3	MECH (113)	ELEV ROOM (120)	200	0.37	50w	900	INLINE CABINET	GREENHECK	CSP-A200	1
EF-4	REMOTE PLANT	REMOTE MECHANICAL ROOM	3,000	0.3	0.75	1,354	WALL PROPELLER	GREENHECK	SS1-18-429-A7	1,2

NOTES: 1. SEE ELECTRICAL MOTOR SCHEDULES OR PLANS FOR VOLTAGE AND PHASING INFORMATION.
2. FAN TO OPERATE WITH VSD CONTROLLER.

PUMP SCHEDULE (P)

TAG	LOCATION	SYSTEM	PUMP TYPE	PUMP			MOTOR		CASING		MANUFACTURER	MODEL	NOTES
				FLOW (GPM)	HEAD (FT WG)	EFF (%)	MOTOR (HP)	SPEED (RPM)	SUCT (IN)	DISCH (IN)			
HWP-1	REMOTE PLANT	HWS	INLINE	82	73	66.0	3.0	3,450	1.25	1.25	BELL & GOSSETT	SERIES 90 - 1-1/4AA	1,2
HWP-2	REMOTE PLANT	HWS	INLINE	82	73	66.0	3.0	3,450	1.25	1.25	BELL & GOSSETT	SERIES 90 - 1-1/4AA	1,2
HCP-1	MECH (113)	HWS	INLINE	34	8	-	0.2	3,300	1.50	1.50	BELL & GOSSETT	BOOSTER PL-50	1
CHWP-1	REMOTE PLANT	CHWS	INLINE	136	91	77.0	5.0	3,450	2.00	2.00	BELL & GOSSETT	SERIES e90 - 2AAC	1,2
CHWP-2	REMOTE PLANT	CHWS	INLINE	136	91	77.0	5.0	3,450	2.00	2.00	BELL & GOSSETT	SERIES e90 - 2AAC	1,2
CWP-5	EXISTING CUP	CWS	VERT. TURBINE	191	81	79.5	7.5	1,770	-	4.00	BELL & GOSSETT	VIT-CATM 7CHC/3	1,2

NOTES: 1. SEE ELECTRICAL MOTOR SCHEDULES OR PLANS FOR VOLTAGE AND PHASE INFORMATION.
2. PUMP TO OPERATE WITH VSD CONTROLLER.

HOT WATER HEATING COIL SCHEDULE (HC)

TAG	LOCATION	MAX. AIR FLOW (CFM)	MIN. AIR FLOW (CFM)	FACE VEL (FPM)	SENSIBLE CAPACITY (MBH)	EAT (DEG F)	LAT (DEG F)	HOT WATER			APD (IN WG)	WPD (FT WG)	ROWS	FINS (FPI)	EACH COIL SIZE		MANUFACTURER	MODEL	NOTES
								EWT (DEG F)	LWT (DEG F)	FLOW (GPM)					LENGTH (IN)	HEIGHT (IN)			
HC-1	AHU-1	19,000	9,500	472	651	41.0	102.0	140.0	101.0	34.0	0.3	4	2	13	84	34.5	TEMTROL	5WC-6-34.5x84x2-13AL	1,2
HC-2	AHU-2	1,000	1,000	314	41	70.0	108.0	140.0	120.0	5.0	0.45	2	2	10	31	15	GREENHECK	HW12C02H10-15x31	-
HC-3	AHU-3	1,000	1,000	314	41	70.0	108.0	140.0	120.0	5.0	0.45	2	2	10	31	15	GREENHECK	HW12C02H10-15x31	-

NOTES: 1. HEATING PERFORMANCE BASED ON MINIMUM AIR FLOW. AIR PRESSURE DROP (APD) BASED ON MAXIMUM AIR FLOW.
2. OVERALL COIL CONSISTS OF TWO COILS.

HOT WATER REHEAT COIL SCHEDULE (RHC)

TAG	LOCATION	MAX AIR FLOW (CFM)	MIN AIR FLOW (CFM)	FACE VEL (FPM)	EAT (DEG F)	LAT (DEG F)	EWT (DEG F)	LWT (DEG F)	WATER FLOW (GPM)	CAPACITY (MBH)	APD (IN WG)	WPD (FT WG)	ROWS	FINS PER INCH	COIL SIZE		MANUFACTURER	MODEL	NOTES
															LENGTH (IN)	WIDTH (IN)			
RHC-1	MECH (113)	4,400	2,200	628	55.0	95.0	140.0	120.0	9.9	95.0	0.23	2.3	2	5	84	34.5	USA COIL	-	1
RHC-2	AHU-1	19,000	9,500	472	49.0	84.0	140.0	90.0	30.0	740.0	0.19	15.1	2	10	84	34.5	TEMTROL	5WC-12-34.5x84x2-10AL	2,3

NOTES: 1. FACE VELOCITY AND APD BASED ON MAXIMUM AIR FLOW. CAPACITY BASED ON MINIMUM AIR FLOW.
2. THIS COIL IS USED FOR DEHUMIDIFICATION PURPOSES ONLY. BALANCING OF COIL TO BE WITH HEATING COIL HC-1 CONTROL VALVE CLOSED WITH NO FLOW.
3. OVERALL COIL CONSISTS OF TWO COILS.

CHILLED WATER COOLING COIL SCHEDULE (CC)

TAG	LOCATION	AIR FLOW (CFM)	FACE VEL (FPM)	CAPACITY		ENTERING AIR		LEAVING AIR		CHILLED WATER			APD (IN WG)	WPD (FT WG)	ROWS	FINS (FPI)	COIL SIZE		MANUFACTURER	MODEL	NOTES
				TOTAL (MBH)	SENSIBLE (MBH)	DB (DEG F)	WB (DEG F)	DB (DEG F)	WB (DEG F)	EWT (DEG F)	LWT (DEG F)	FLOW (GPM)					LENGTH (IN)	HEIGHT (IN)			
CC-1	AHU-1	19,000	472	791	533	80.0	67.0	53	53	44	58	113	0.73	12	6	10	84	34.5	TEMTROL	5WC-8-34.5x84x6-10AL	1,2
CC-2	AHU-2	1,000	295	36	28	83.0	67.0	55	54	44	58	5	0.2	3	6	8	31	15	GREENHECK	CW12C06H08-15X31	1
CC-3	AHU-3	1,000	295	36	28	83.0	67.0	55	54	44	58	5	0.2	3	6	8	31	15	GREENHECK	CW12C06H08-15X31	1

NOTES: 1. COIL INTEGRAL TO AIR HANDLING UNIT INSTALLED IN.
2. OVERALL COIL CONSISTS OF TWO COILS.

ULINE
12575 Uline Drive
Pleasant Prairie, WI 53158

ULINE
SHIPPING SUPPLY SPECIALISTS

NO	DESCRIPTION	DATE
	CP-2	07/10/15

ISSUANCE HISTORY - THIS SHEET

HGA NO: 3595-001-00

MECHANICAL SCHEDULES

DATE: May 8, 2015

CONSTRUCTION DOCUMENTS

M800

©COPYRIGHT HAMMEL, GREEN AND ABRAHAMSON, INC.

hGA.
420 5th Street North, Suite 100
Minneapolis, Minnesota 55401
Telephone 612.758.4000

AIR FILTER SCHEDULE (AF)

TAG	LOCATION	AIRFLOW (CFM)	FILTER						BANK SIZE		INITIAL APD (IN WG)	DIRTY APD (IN WG)	SERVICE ACCESS	MANUFACTURER	MODEL	NOTES
			TYPE	MERV	EFF (%)	HEIGHT (IN)	WIDTH (IN)	DEPTH (IN)	HEIGHT (IN)	WIDTH (IN)						
FF-1A	AHU-1	16,000	PLEATED PANEL	8	50	-	-	2.00	72.00	84.00	0.20	0.75	SIDE	FLANDERS	VP-MERV 8A	-
FF-1B	AHU-1	16,000	RIGID CELL BOX	14	95	-	-	12.00	72.00	84.00	0.60	2.00	SIDE	FLANDERS	SVF-95	-
FF-2	AHU-2	1,000	PLEATED PANEL	8	50	-	-	2.00	16.00	36.00	0.10	0.25	SIDE	FLANDERS	VP-MERV 8A	-
FF-3	AHU-3	1,000	PLEATED PANEL	8	50	-	-	2.00	16.00	36.00	0.10	0.25	SIDE	FLANDERS	VP-MERV 8A	-

ELECTRIC HUMIDIFIER SCHEDULE (H)

TAG	LOCATION	ELECTRICAL (KW)	CAPACITY (LB/HR)	SUPPLY AIR FLOW (CFM)	OUTDOOR AIR FLOW (CFM)	ENTERING AIR		MANIFOLD				LEAVING AIR		MANUFACTURER	MODEL	NOTES
						DRY BULB (DEG F)	RELATIVE HUMIDITY (%RH)	QTY	LENGTH (IN)	HEIGHT (IN)	ABSORPTION DISTANCE (FT.)	DRY BULB (DEG F)	RELATIVE HUMIDITY (%RH)			
H-1	AHU-1	45.9	120.0	19,000	6,080	55.0	49.0	1	94	79	0.35	55.0	64.0	NORTEC	NHRS	1,2

NOTES: 1. SEE ELECTRICAL MOTOR SCHEDULES OR PLANS FOR VOLTAGE AND PHASE INFORMATION.
2. PROVIDE MANUFACTURERS MODEL SAM-e SHORT ABSORPTION MANIFOLD, HEADERS AND AIR GAP INSULATED TUBES.

DIFFUSERS, REGISTERS, AND GRILLES SCHEDULE (GRD)

TAG	USAGE	DESCRIPTION	MATERIAL/ FINISH	MANUFACTURER	MODEL	NOTES
RG-1	SURFACE MOUNTED RETURN GRILLE	24" SQUARE PERFORATED GRILLE	ST	TITUS	PXP	1,2,6
SD-1	LAY-IN CEILING SUPPLY DIFFUSER	FULL FACE 24" SQUARE CEILING DIFFUSER WITH ROUND NECK	ST	TITUS	TMSA	1,2,3,4,6
SG-1	SURFACE MOUNTED SUPPLY REGISTER	DOUBLE DEFLECTION SURFACE MOUNTED REGISTER TWO SETS INDIVIDUALLY ADJUSTABLE, FRONT SET VERTICAL LOUVERS	ST	TITUS	272RL	1,2,3,4,5,6
SG-2	DUCT-MOUNTED ROUND SUPPLY GRILLE	ALUMINUM SINGLE DEFLECTION SUPPLY GRILLE, 3/4" BLADE SPACING	AL	TITUS	R-301F	1,5,6
TG-1	LAY-IN CEILING TRANSFER GRILLE	24" SQUARE PERFORATED GRILLE	ST	TITUS	PXP	1,2,6
EG-1	LAY-IN CEILING EXHAUST GRILLE	PERFORATED GRILLE WITH ROUND NECK, PERFORATED FACE HAS 3/16" HOLES ON 1/4" STAGGERED CENTERS.	ST	TITUS	PAR-1	1,2,3,6
EG-2	SURFACE MOUNTED EXHAUST GRILLE	SINGLE 45 DEG DEFLECTION FILTER RETURN GRILLE, 3/4" SPACING	ST	TITUS	350RL	1,2,3,6,7

NOTES: 1. GRILLE, REGISTER AND DIFFUSER SIZES ARE NOTED ON THE HVAC FLOOR PLANS OR VENTILATION SCHEDULES.
2. PROVIDE APPROPRIATE FRAME/BORDER/FLANGE FOR PROPER MOUNTING. REFER TO THE ARCHITECTURAL DRAWINGS FOR SURFACES IN WHICH GRILLES REGISTERS AND DIFFUSERS ARE LOCATED.
3. PROVIDE OPPOSED BLADE DAMPER ON SURFACE MOUNTED REGISTERS.
4. AIR PATTERN SHALL BE ADJUSTABLE.
5. 3/4" LOUVER SPACING
6. MATERIAL/FINISH KEY
AL - ALUMINUM WITH STANDARD FACTORY WHITE ENAMEL FINISH.
ST - STEEL WITH STANDARD FACTORY WHITE ENAMEL FINISH.
SS - POLISHED STAINLESS STEEL.
NAT AL - NATURAL ALUMINUM.
CL AN - CLEAR ANODIZED.
7. INSTALL GRILLE SUCH THAT THE GRILLE OPENINGS FACE AWAY FROM THE LINE-OF-SIGHT OF THE ROOM OCCUPANT.

ELECTRIC UNIT HEATER SCHEDULE (EUH)

TAG	LOCATION	MOUNTING	TYPE	AIR FLOW (CFM)	HEATING CAPACITY (KW)	FAN MOTOR HP	MANUFACTURER	MODEL	NOTES
EUH-1	REMOTE PLANT	CEILING	HORIZONTAL DISCHARGE	1,100	15	1/20	TRANE	UHEC-153DACA	1,2

NOTES: 1. SEE ELECTRICAL MOTOR SCHEDULES OR PLANS FOR VOLTAGE AND PHASE INFORMATION.
2. MAXIMUM MOUNTING HEIGHT OF 11' ABOVE THE FINISHED FLOOR.

CABINET UNIT HEATER SCHEDULE (CUH)

TAG	LOCATION	MOUNTING	TYPE	STYLE	AIR INLET	AIR OUTLET	HEATING CAPACITY (MBH)	AIR FLOW (CFM)	EAT (DEG. F)	LAT (DEG. F)	WATER FLOW (GPM)	MAX WPD (FT WG)	FAN MOTOR (Watts)	MANUFACTURER	MODEL	NOTES
CUH-1	STAIR (134)	WALL	VERTICAL	UP FLOW	BOTTOM	TOP	45.3	844	70	119	5	6	145	TRANE	FFBB10	1,2,3,4

NOTES: 1. SEE ELECTRICAL MOTOR SCHEDULES OR PLANS FOR VOLTAGE AND PHASE INFORMATION.
2. SIZES BASED ON 140 DEGREE F EWT AND 70 DEGREE F EAT.
3. MOUNTING HEIGHT FOR WALL MOUNTED UNITS IS 6" ABOVE THE FINISHED FLOOR UNLESS NOTED OTHERWISE.
4. SELECTION BASED ON 3 ROW COIL AND HIGH FAN SPEED.

HOT WATER UNIT HEATER SCHEDULE (UH)

TAG	LOCATION	TYPE	HEATING			AIR CAPACITY (CFM)	FAN MOTOR (HP)	MANUFACTURER	MODEL	NOTES
			OUTPUT (MBH)	FLOW (GPM)	WPD (FT WG)					
UH-1	MECH (113)	HORIZONTAL	10.0	3.0	1.00	480	25w	TRANE	UHS-36	1,2
UH-2	REMOTE PLANT	HORIZONTAL	55.0	11.3	0.53	2,600	1 / 3	TRANE	UHSA-156	1,2

NOTES: 1. SEE ELECTRICAL MOTOR SCHEDULES OR PLANS FOR VOLTAGE AND PHASE INFORMATION.
2. SIZES BASED ON 140 DEGREE F EWT AND 70 DEGREE F EAT.

AIR SEPARATOR SCHEDULE (AS)

TAG	LOCATION	SYSTEM	PIPE CONNECTIONS		FLOW (GPM)	WPD (FT WG)	MANUFACTURER	MODEL	NOTES
			INLET (IN)	OUTLET (IN)					
AS-1	REMOTE PLANT	HWS/R	2.5	2.5	62	1	BELL & GOSSETT	R-2.5N	1
AS-2	REMOTE PLANT	CHWS/R	3	3	123	2.3	BELL & GOSSETT	R-3F	1

NOTES: 1. AIR SEPARATOR WITH INTEGRAL STRAINER.

EXPANSION TANK SCHEDULE (T)

TAG	LOCATION	SYSTEM SERVED	TANK HEIGHT (IN)	TANK DIA (IN)	TOTAL TANK VOLUME (GAL)	MINIMUM ACCEPT VOLUME (GAL)	SYSTEM FILL PRESSURE (PSIG)	INITIAL TANK PRESSURE (PSIG)	RELIEF VALVE SETTING (PSIG)	INIITIAL FILL TEMP. (DEG F)	MAXIMUM TANK PRESSURE (PSIG)	MAXIMUM OPERATING TEMP. (DEG F)	MANUFACTURER	MODEL	NOTES
T-1	REMOTE PLANT	HWS/R	30	16	21.7	11.3	17	6.2	50	40	40.8	170	BELL & GOSSETT	D-40V	-
T-2	REMOTE PLANT	CHWS/R	30	16	21.7	11.3	17	6.2	30	40	40.8	90	BELL & GOSSETT	D-40V	-

NOTES:

ULINE
12575 Uline Drive
Pleasant Prairie, WI 53158

ULINE
SHIPPING SUPPLY SPECIALISTS

NO	DESCRIPTION	DATE
	CP-2	07/10/15

ISSUANCE HISTORY - THIS SHEET

HGA NO: 3595-001-00

MECHANICAL SCHEDULES

DATE: May 8, 2015

CONSTRUCTION DOCUMENTS

M801

©COPYRIGHT HAMMEL, GREEN AND ABRAHAMSON, INC.

CHILLED WATER PLANT

Point Name	Display on Graphic?	Point Type: Hardware Input	Point Type: Hardware Output	Point Type: Software	Point Type: Hardware Interlock	Point Type: Wireless	Default Value	Time Delay	Dead band	High Limit	Low Limit	Text: Normal	Text: Alarm	Miscellaneous: Trending	Miscellaneous: User Adjustable	Miscellaneous: Runtime	Miscellaneous: Accumulator	Miscellaneous: Flow	Alarm Class: Alarm	Alarm Class: Alert	Alarm Class: Log Only	Comm Loss	Instance	Description	Notes
CHILLED WATER RETURN TEMPERATURE	X	AI												X					X						
CHILLED WATER SUPPLY TEMPERATURE	X	AI												X	X				X						
CHILLED WATER RETURN TEMPERATURE LOCAL				X																					NOTE 2
CHILLED WATER SUPPLY TEMPERATURE LOCAL				X																					NOTE 2
OUTDOOR AIR RELATIVE HUMIDITY	X	AI																							NOTE 1
OUTDOOR AIR TEMPERATURE	X	AI																							NOTE 1
CHILLED WATER SETPOINT ACTIVE	X			X										X											
PERCENT RUNNING CAPACITY	X			X																					NOTE 2
SUCTION PRESSURE CKT 1				X																					NOTE 2
SUCTION PRESSURE CKT 2				X																					NOTE 2
EVAPORATOR SATURATED REFRIG TEMP CKT 1				X																					NOTE 2
EVAPORATOR SATURATED REFRIG TEMP CKT 2				X																					NOTE 2
CONDENSER REFRIG PRESS CKT 1				X										X											NOTE 2
CONDENSER REFRIG PRESS CKT 2				X										X											NOTE 2
CONDENSER SATURATED REFRIG TEMP CKT 1				X																					NOTE 2
CONDENSER SATURATED REFRIG TEMP CKT 2				X																					NOTE 2
CONDENSER ENTERING WATER TEMPERATURE	X													X											NOTE 2
CONDENSER LEAVING WATER TEMPERATURE	X													X											
COND ENTERING WATER TEMPERATURE LOCAL				X																					
COND LEAVING WATER TEMPERATURE LOCAL				X																					NOTE 2
CHILLED WATER PUMP 1 STATUS	X	BI																		X					NOTE 2
CHILLED WATER PUMP 2 STATUS	X	BI																		X					
CHILLED WATER FLOW STATUS				X																					NOTE 2
CONDENSER WATER FLOW STATUS				X																					NOTE 2

Notes:
1) May be a communicated value
2) Communicated from chiller control panel
3)
4)
5)
6)

CHILLED WATER PLANT

Point Name	Display on Graphic?	Point Type: Hardware Input	Point Type: Hardware Output	Point Type: Software	Point Type: Hardware Interlock	Point Type: Wireless	Default Value	Time Delay	Dead band	High Limit	Low Limit	Text: Normal	Text: Alarm	Miscellaneous: Trending	Miscellaneous: User Adjustable	Miscellaneous: Runtime	Miscellaneous: Accumulator	Miscellaneous: Flow	Alarm Class: Alarm	Alarm Class: Alert	Alarm Class: Log Only	Comm Loss	Instance	Description	Notes
CHILLER START/STOP				X															X						NOTE 2
CHILLER STATUS	X			X																					NOTE 2
COMPRESSOR 1 STATUS	X			X																					NOTE 2
COMPRESSOR 2 STATUS	X			X																					NOTE 2
CHILLER EVAPORATOR PUMP REQUEST				X																					NOTE 2
CHILLER CONDENSER PUMP REQUEST				X																					NOTE 2
CHILLED WATER PUMP 1 START/STOP	X		BO																						
CHILLED WATER PUMP 2 START/STOP	X		BO																						
CHILLER MODE	X			X																					NOTE 2
CONDENSER WATER CWP-5 BYPASS FEEDBACK	X	BI																							
COND WATER CWP-5 BYPASS VALVE OUTPUT			BO																			X			
COMMUNICATION						X													X						

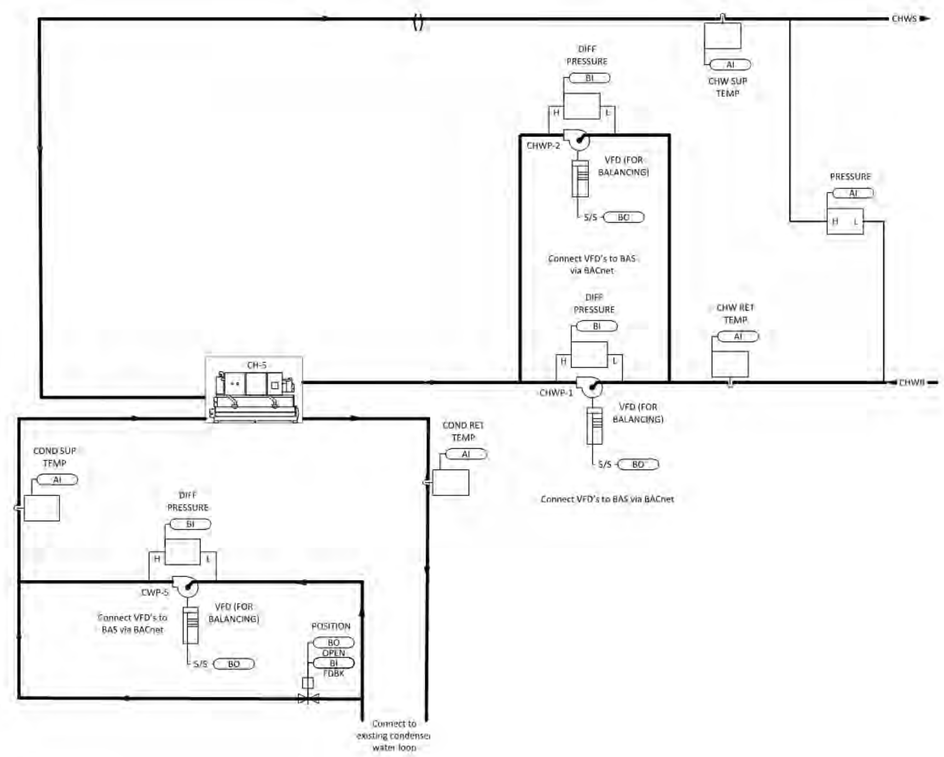

333 East Erie Street
Milwaukee, Wisconsin 53202
Telephone 414.278.8200

ULINE
12575 Uline Drive
Pleasant Prairie, WI 53158

ULINE
SHIPPING SUPPLY SPECIALISTS

NO	DESCRIPTION	DATE
	CP-2	07/10/15

ISSUANCE HISTORY - THIS SHEET

HGA NO: 3595-001-00

CONTROLS

DATE: May 8, 2015

CONSTRUCTION DOCUMENTS

M900

© COPYRIGHT HAMMEL, GREEN AND ABRAHAMSON, INC.

7/10/2015 9:44:05 AM C:\Users\gladam\Documents\Revit Local Files\M15-Uline Mechanical-3595001100_gladam-PC7151.rvt

INDOOR CENTRAL STATION AIR HANDLING UNITS SINGLE ZONE VAV

Point Name	Display on Graphic?	Point Type: Hardware Input	Point Type: Hardware Output	Point Type: Software	Point Type: Hardware Interlock	Point Type: Wireless	Default Value	Time Delay	Dead band	High Limit	Low Limit	Text: Normal	Text: Alarm	Miscellaneous: Trending	Miscellaneous: User Adjustable	Miscellaneous: Runtime	Miscellaneous: Accumulator	Miscellaneous: Flow	Alarm Class: Alarm	Alarm Class: Alert	Alarm Class: Log Only	Comm Loss	Instance	Description	Notes
AHU-1: Exhaust Fan Start/Stop			BO												X										
AHU-1: Exhaust Fan Min. Runtime															X										
AHU-1: Exhaust Fan VFD Min Speed				X			30%								X										
AHU-1: Exhaust Fan VFD Input %			AO												X										
AHU-1: Exhaust Fan VFD Output %				X																					
AHU-1: Exhaust Fan VFD Output Hz				X																					
AHU-1: Exhaust Fan VFD Fault				X																					
AHU-1: Building Static Pressure			AI											X											Note 1
Master Office: Building Static Pressure																									Note 2
Warehouse: Building Static Pressure Active Setpt							0.03 in H20								X										Note 2
AHU-1: Building Static Pressure Min Setpt				X			0.05 in H20							X	X										
AHU-1: Building Static Pressure Active Setpt				X											X										
AHU-1: Building Static Pressure Over Warehouse Setpt							+0.02 in H20								X										Note 2
AHU-1: Building Static Pressure Diff Below Time				X			15 min								X										
AHU-1: Heat Recovery Device Status																									Note 2
AHU-1: Supply Air Temp	X	AI								X	X														
AHU-1: Supply Air Temp Active Setpt				X											X										
AHU-1: Supply Air Temp Cooling Min Setpt				X			53°F								X										
AHU-1: Supply Air Temp Cooling Max Setpt				X			60°F								X										
AHU-1: Supply Air Temp Cooling Setpt				X			55°F								X										
AHU-1: Supply Air Cooling Reset Humidity Setpt				X			60%								X										
AHU-1: Zones Below Heating Temp Setpt							3°F								X										Note 2
AHU-1: Supply Air Temp Heating Max Setpt				X			85°F								X										
AHU-1: Supply Air Temp Heating Min Setpt							72°F								X										
AHU-1: Supply Air Temp Heating Setpt							82°F								X										
Master Office: Outdoor Air Temp				X																					

Notes:
1) Locate in airstream
2) Not Applicable
3)
4)
5)
6)

INDOOR CENTRAL STATION AIR HANDLING UNITS SINGLE ZONE VAV

Point Name	Display on Graphic?	Point Type: Hardware Input	Point Type: Hardware Output	Point Type: Software	Point Type: Hardware Interlock	Point Type: Wireless	Default Value	Time Delay	Dead band	High Limit	Low Limit	Text: Normal	Text: Alarm	Miscellaneous: Trending	Miscellaneous: User Adjustable	Miscellaneous: Runtime	Miscellaneous: Accumulator	Miscellaneous: Flow	Alarm Class: Alarm	Alarm Class: Alert	Alarm Class: Log Only	Comm Loss	Instance	Description	Notes
MOS: Setpoint Adjust				X																					
AHU-1: MOS Occupied Cooling Setpt		X					+1 F			X	X				X										
AHU-1: MOS Occupied Heating Setpt		X					-1 F			X	X				X										
AHU-1: MOS Unoccupied Cooling Setpt		X					+10 F			X	X				X										
AHU-1: MOS Unoccupied Heating Setpt		X					-5 F			X	X				X										
AHU-1: Zone Setpoint Adjust Lockout															X										
AHU-1: Zone Temp	X	AI								X	X			X											
AHU-1: Local Zone Temp Setpt	X	AI																							
AHU-1 Active Zone Temp Setpt	X													X											
AHU-1: Minimum Cooling Airflow Setpt				X			50%								X										
AHU-1: Maximum Cooling Airflow Setpt				X											X										
AHU-1: Minimum Heating Airflow Setpt				X			50%								X										
AHU-1: Maximum Heating Airflow Setpt				X											X										
AHU-1: Occupied Bypass Timer Status	X																								
AHU-1: Occupied Bypass Timer				X											X										
AHU-1: Start/Stop				X											X										
AHU-1: Emergency Shutdown				X																					
AHU-1: Freeze Protection					X		40°F																		
AHU-1: Supply/Return Air Smoke Detection		BI			X																				
AHU-1: Supply Fan Start/Stop	X	BO													X										
AHU-1: Supply Fan Min. Runtime															X										
AHU-1: Supply Fan VFD Min Speed				X			30%								X										
AHU-1: Supply Fan VFD Input %				X											X										
AHU-1: Supply Fan VFD Output %	X	AO		X										X											
AHU-1: Supply Fan VFD Output Hz				X																					
AHU-1: Supply Fan VFD Runtime																X									
AHU-1: Supply Fan VFD Fault	X			X															X						

Notes:
1)
2)
3)
4)
5)
6)

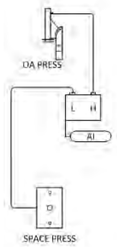

()

INDEPENDENT EXHAUST SYSTEM (IFE-1)

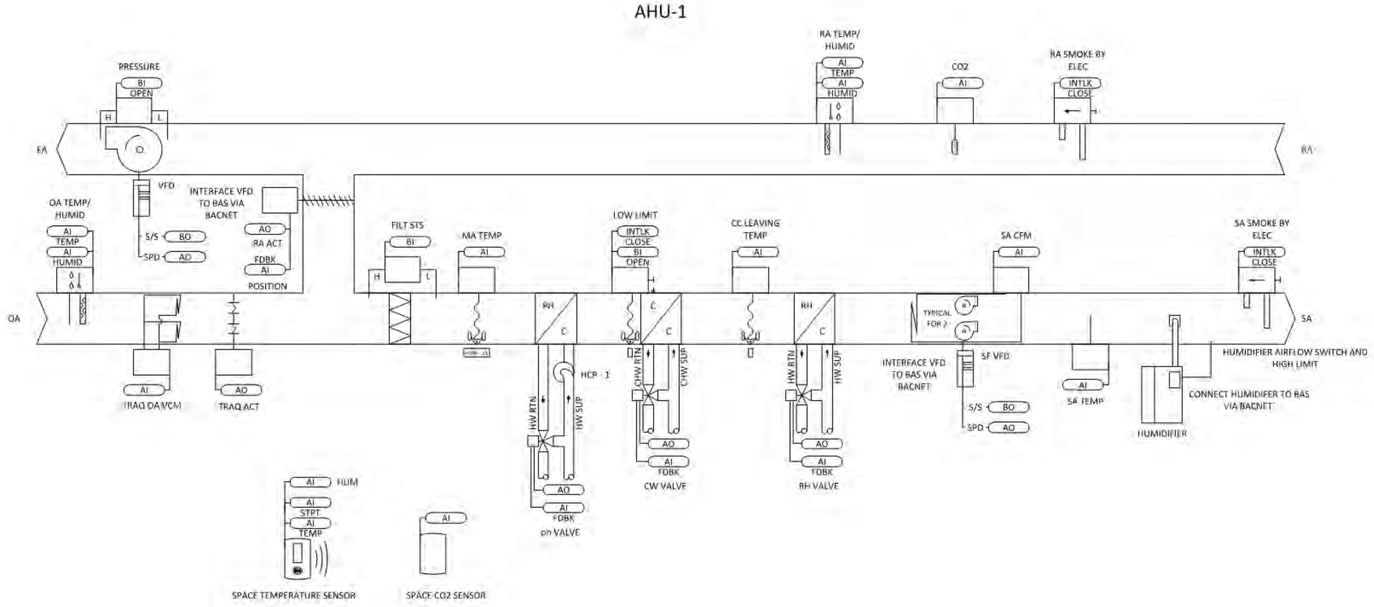

hga.
333 East Erie Street
Milwaukee, Wisconsin 53202
Telephone 414.278.8200

ULINE
12575 Uline Drive
Pleasant Prairie, WI 53158

ULINE
SHIPPING SUPPLY SPECIALISTS

NO	DESCRIPTION	DATE
	CP-2	07/10/15

ISSUANCE HISTORY - THIS SHEET

HGA NO: 3595-001-00

CONTROLS

DATE: May 8, 2015

CONSTRUCTION DOCUMENTS

M901

© COPYRIGHT HAMMEL, GREEN AND ABRAHAMSON, INC.

7/10/2015 9:44:08 AM C:\Users\gladam\Documents\Revit Local Files\M15-Uline Mechanical-359500100_gladam-PC7131.rvt

HUMIDIFIERS

Point Name	Display on Graphic?	Point Type: Hardware Input	Hardware Output	Software	Hardware Interlock	Wireless	Default Value	Text: Time Delay	Dead band	High Limit	Low Limit	Normal	Alarm	Miscellaneous: Trending	User Adjustable	Runtime	Accumulator	Flow	Alarm Class: Alarm	Alert	Log Only	Comm Loss	Instance	Description	Notes
HUM-**: Space Relative Humidity	X	AI												X											Note 1
HUM-**: Space Dew Point				X																					Note 2
HUM-**: Duct Relative Humidity	X													X											Note 1
HUM-**: Steam Demand Mass																									Note 3
HUM-**: Steam Demand Percent																									Note 3
HUM-**: Water Temperature																									Note 3
HUM-**: Steam Output Mass																									Note 3
HUM-**: Steam Output Percent														X											Note 3
HUM-**: Operation Current																									Note 3
HUM-**: Run Mode															X										Note 3
HUM-**: Space Relative Humidity Setpoint							40%							X	X										
HUM-**: Space Dew Point Setpoint															X										
HUM-**: Duct High Limit Setpoint					X										X										Note 4
HUM-**: Fill Valve																									Note 3
HUM-**: Drain Valve																									Note 3
HUM-**: Factory Alarm																									Note 3
HUM-**: High Zone Temp								2 min				Normal	Alarm	X	X				X						Note 1
HUM-**: Low Zone Temp								2 min				Normal	Alarm	X	X				X						Note 1
HUM-**: High Zone Humidity							70%	5 min				Normal	Alarm	X	X				X						Note 1
HUM-**: Low Zone Humidity							35%	5 min				Normal	Alarm	X	X				X						Note 1

Notes:
1) See AHU-1 controller points list
2) Calculated Value
3) Communicate to BAS via BACnet. Conform points availability with humidifier manfacturer.
4) High limit furnished by humidifier manufacturer. Interlock with humidifier.
5)
6)

INDOOR CENTRAL STATION AIR HANDLING UNITS SINGLE ZONE VAV

Point Name	Display on Graphic?	Point Type: Hardware Input	Hardware Output	Software	Hardware Interlock	Wireless	Default Value	Text: Time Delay	Dead band	High Limit	Low Limit	Normal	Alarm	Miscellaneous: Trending	User Adjustable	Runtime	Accumulator	Flow	Alarm Class: Alarm	Alert	Log Only	Comm Loss	Instance	Description	Notes
AHU-1: Supply Fan Failure																			X						
AHU-1: Supply Fan In Hand				X																					
AHU-1: High Supply Fan Speed							+5%								X										
AHU-1: Low Supply Fan Speed							-5%								X										
AHU-1: Exhaust Fan Failure																			X						
AHU-1: Exhaust Fan In Hand																									
AHU-1: Heat Wheel Rotation Failure																									Note 3
AHU-1: Heat Wheel in Hand																									Note 3
AHU-1: High Building Static Pressure							+25%	2 min							X						X				
AHU-1: Low Building Static Pressure							-25%	2 min							X						X				
AHU-1: Low Supply Air Temp							-5°F	2 min							X						X				
AHU-1: High Supply Air Temp							+5°F	2 min							X						X				
AHU-1: High Mixed Air Temp							90°F								X						X				
AHU-1: Low Mixed Air Temp							45°F								X						X				
AHU-1: High Return Air Carbon Dioxide Concentration							800 ppm	10 min							X						X				
AHU-1: High Return Air Humidity							70%	5 min							X						X				
AHU-1: Low Return Air Humidity							35%	5 min							X										
AHU-1: High Return Air Temp							90°F	2 min							X										
AHU-1: Low Return Air Temp							45°F	2 min							X										
HCP-1 Start/Stop	X		BO				40°F																		
HCP-1 Status	X	BI																		X					
Filter Status	X	BI																		X					
Chilled Water Valve Feedback %	X	AI																							
Hot Water Preheat Valve Feedback %	X	AI																							
Hot Water Reheat Valve Feedback %	X	AI																							
Outdoor Air relative Humidity Local	X	AI												X											
Outdoor Air Temperature Local	X	AI												X											

Notes:
1)
2) Not Applicable
3)
4)
5)
6)

INDOOR CENTRAL STATION AIR HANDLING UNITS SINGLE ZONE VAV

Point Name	Display on Graphic?	Point Type: Hardware Input	Hardware Output	Software	Hardware Interlock	Wireless	Default Value	Text: Time Delay	Dead band	High Limit	Low Limit	Normal	Alarm	Miscellaneous: Trending	User Adjustable	Runtime	Accumulator	Flow	Alarm Class: Alarm	Alert	Log Only	Comm Loss	Instance	Description	Notes
Master Office: Outdoor Air Humidity																									
AHU-1: Mixed Air Temp	X	AI																							
AHU-1: Return Air CO2	X	AI								X				X											
AHU-1: Return Air Humidity	X	AI								X				X											
AHU-1: Return Air Temp	X	AI												X											
AHU-1: Cooling Enable Outdoor Temp Setpt				X			60°F								X										
AHU-1: Cooling Enable Status																									
AHU-1: Chilled Water Valve %	X		AO											X											
AHU-1: Cooling Coil Leaving Air Temp	X													X											
AHU-1: Heating Enable Outdoor Temp Setpt				X			65°F								X										
AHU-1: Heating Enable Status	X			X																					
AHU-1: Preheat Hot Water Valve Output %	X		AO											X											
AHU-1: Reheat Hot Water Valve Output%	X		AO											X											
AHU-1: Outside Air Damper Min Position Setpt				X			20%								X										Note 3
AHU-1: Outside Air Damper Close Temp Setpt							35°F								X										Note 2
AHU-1: Economizer Status																									
AHU-1: Outside Air Damper Position			AO																						
AHU-1: Outside Air Flow	X	AI												X											
AHU-1: Outside Air Flow Setpt				X										X	X										
AHU-1: Space/Return CO2 Setpt				X			750 ppm								X										
AHU-1: Zone Max CO2 Status																									
AHU-1: Dehumidification Enable Setpt							60% RH								X										
AHU-1: Dehumidification Status	X																								
AHU-1: High Zone Temp															X										
AHU-1: Low Zone Temp															X										
AHU-1: Factory Alarm																									NA

Notes:
1)
2) Not Applicable
3) OAD damper & does not apply. Outdoor airflow measurement provided.
4)
5)
6)

INDOOR CENTRAL STATION AIR HANDLING UNITS SINGLE ZONE VAV

Point Name	Display on Graphic?	Point Type: Hardware Input	Hardware Output	Software	Hardware Interlock	Wireless	Default Value	Text: Time Delay	Dead band	High Limit	Low Limit	Normal	Alarm	Miscellaneous: Trending	User Adjustable	Runtime	Accumulator	Flow	Alarm Class: Alarm	Alert	Log Only	Comm Loss	Instance	Description	Notes
AHU-1: Exhaust Fan Start/Stop			BO												X										
AHU-1: Exhaust Fan Min. Runtime															X										
AHU-1: Exhaust Fan VFD Min Speed				X			30%								X										
AHU-1: Exhaust Fan VFD Input %			AO												X										
AHU-1: Exhaust Fan VFD Output %				X																					
AHU-1: Exhaust Fan VFD Output Hz				X																					
AHU-1: Exhaust Fan VFD Fault				X																					
AHU-1: Building Static Pressure				AI										X											Note 1
Master Office: Building Static Pressure																									Note 2
Warehouse: Building Static Pressure Active Setpt							(0.02 in H20								X										Note 2
AHU-1: Building Static Pressure Min Setpt				X			0.05 in H20							X	X										
AHU-1: Building Static Pressure Active Setpt				X											X										
AHU-1: Building Static Pressure Over Warehouse Setpt							+0.02 in H20								X										Note 2
AHU-1: Building Static Pressure Diff Below Time				X			15 min								X										
AHU-1: Heat Recovery Device Status																									Note 2
AHU-1: Supply Air Temp	X	AI								X	X														
AHU-1: Supply Air Temp Active Setpt				X											X										
AHU-1: Supply Air Temp Cooling Min Setpt				X			53°F								X										
AHU-1: Supply Air Temp Cooling Max Setpt				X			60°F								X										
AHU-1: Supply Air Temp Cooling Setpt				X			55°F								X										
AHU-1: Supply Air Cooling Reset Humidity Setpt				X			60%								X										
AHU-1: Zones Below Heating Temp Setpt							3°F								X										Note 2
AHU-1: Supply Air Temp Heating Max Setpt				X			85°F								X										
AHU-1: Supply Air Temp Heating Min Setpt							72°F								X										
AHU-1: Supply Air Temp Heating Setpt							82°F								X										
Master Office: Outdoor Air Temp				X																					

Notes:
1) Locate in airstream
2) Not Applicable
3)
4)
5)
6)

333 East Erie Street
Milwaukee, Wisconsin 53202
Telephone 414.278.8200

ULINE
12575 Uline Drive
Pleasant Prairie, WI 53158

ULINE
SHIPPING SUPPLY SPECIALISTS

NO	DESCRIPTION	DATE
	CP-2	07/10/15

ISSUANCE HISTORY - THIS SHEET

HGA NO: 3595-001-00

CONTROLS

DATE: May 8, 2015

CONSTRUCTION DOCUMENTS

M902

© COPYRIGHT HAMMEL, GREEN AND ABRAHAMSON, INC.

7/10/2015 9:44:10 AM C:\Users\jladam\Documents\Revit Local Files\M15-Uline Mechanical-359500100_jladamv-PC7131.rvt

FAN COIL UNITS

Point Name	Display on Graphic?	Point Type: Hardware Input	Point Type: Hardware Output	Point Type: Software	Point Type: Hardware Interlock	Point Type: Wireless	Default Value	Text: Normal	Text: Alarm	Miscellaneous: Trending	Miscellaneous: User Adjustable	Miscellaneous: Runtime	Miscellaneous: Accumulator	Miscellaneous: Flow	Alarm Class: Alarm	Alarm Class: Alert	Alarm Class: Log Only	Comm Loss	Instance	Description	Notes
MOS: Setpoint Adjust				X							X										
FCU-**: MOS Occupied Cooling Setpt				X			+1 F				X										
FCU-**: MOS Occupied Heating Setpt				X			-1 F				X										
FCU-**: MOS Unoccupied Cooling Setpt				X			+10 F				X										
FCU-**: MOS Unoccupied Heating Setpt				X			-5 F				X										
FCU-**: Zone Setpoint Adjust Lockout											X										
FCU-**: Discharge Air Temperature	X	AI																			
FCU-**: Discharge Air Temperature Active Setpt				X							X										
FCU-**: Discharge Air Temp Reset High Setpt				X			53 F				X										
FCU-**: Discharge Air Temp Reset Low Setpt				X			120 F				X										
FCU-**: Zone Temp	X	AI								X											
FCU-**: Zone Temp Setpt		AI								X											Note 3
FCU-**: Fan Output	X		BO								X										
FCU-**: Fan Status	X																				
FCU-**: Fan Min Runtime											X										
FCU-**: Cooling Enable Outdoor Temp Setpt				X			60 F				X										
FCU-**: Cooling Enable Status																					
FCU-**: Chilled Water Valve	X		FLTG							X											
FCU-**: Heating Enable Outdoor Temp Setpt							65 F				X										
FCU-**: Heating Enable Status																					
FCU-**: Heating Valve Command	X		FLTG							X											
FCU-**: Electric Heat Command	X																				Note 1
FCU-**: Dehumidification Enable Setpt							50% RH				X										Note 1
FCU-**: Dehumidification Status																					Note 1
FCU-**: Occupied Bypass Timer Status																					Note 1
FCU-**: Occupied Bypass Timer				X							X										Note 1

Notes:
1) Not Applicable
2)
3) NA, No Local setpoint provided
4)
5)
6)

FAN COIL UNITS

Point Name	Display on Graphic?	Point Type: Hardware Input	Point Type: Hardware Output	Point Type: Software	Point Type: Hardware Interlock	Point Type: Wireless	Default Value	Text: Time Delay	Text: Deadband	Text: High Limit	Text: Low Limit	Miscellaneous: Normal	Miscellaneous: Alarm	Miscellaneous: Trending	Miscellaneous: User Adjustable	Miscellaneous: Runtime	Miscellaneous: Accumulator	Miscellaneous: Flow	Alarm Class: Alarm	Alarm Class: Alert	Alarm Class: Log Only	Comm Loss	Instance	Description	Notes
Master Office: Outdoor Air Temp				X																				
FCU-**: Return Air Humdity		AI																						Note 1
FCU-**: Emergency Shutdown																								
FCU-**: Freeze Protection				X			40°F																	Note 1
FCU-**: Condensate Overflow Protection			BI																					
FCU-**: High Zone Temp								2 min							X									
FCU-**: Low Zone Temp								2 min							X									
FCU-**: High Discharge Air Temp							120°F	1 min							X									
FCU-**: Low Discarge Air Temp							40°F	1 min							X									
FCU-**: Cooling Coil Failure																								
FCU-**: Cooling Coil in Hand																								
FCU-**: Heating Coil Failure																								
FCU-**: Heating Coil in Hand																								
FCU-**: High Return Air Humidity							70%								X									Note 1
FCU-**: Fan Failure																								
FCU-**: Fan in Hand																								

Notes:
1) Not Applicable.
2)
3)
4)
5)
6)

AHU 2 ~ 3

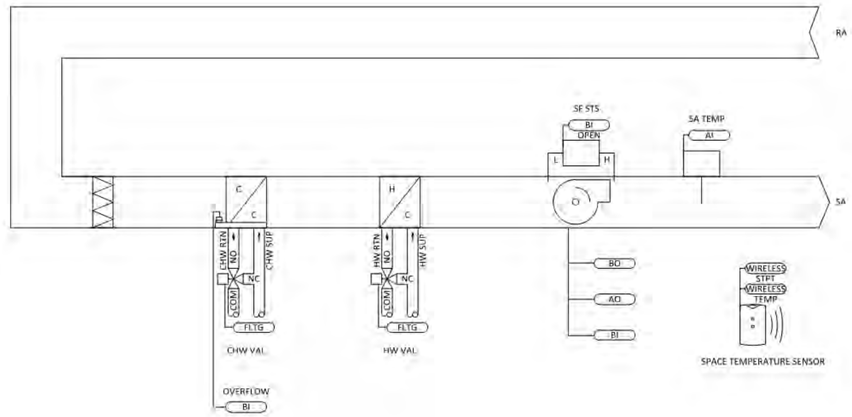

333 East Erie Street
Milwaukee, Wisconsin 53202
Telephone 414.278.8200

ULINE
12575 Uline Drive
Pleasant Prairie, WI 53158

ULINE
SHIPPING SUPPLY SPECIALISTS

NO	DESCRIPTION	DATE
	CP-2	07/10/15

ISSUANCE HISTORY - THIS SHEET

HGA NO: 3595-001-00

CONTROLS

DATE: May 8, 2015

CONSTRUCTION DOCUMENTS

M903

© COPYRIGHT HAMMEL, GREEN AND ABRAHAMSON, INC.

7/10/2015 9:44:12 AM C:\Users\gladam\Documents\Revit Local Files\M15-Uline Mechanical-359500100_gladamr-PC7131.rvt

333 East Erie Street
Milwaukee, Wisconsin 53202
Telephone 414.278.8200

HYDRONIC PUMPS - HOT WATER SYSTEM

Point Name	Display on Graphic?	Point Type: Hardware Input	Hardware Output	Software	Hardware Interlock	Wireless	Default Value	Text: Time Delay	Dead band	High Limit	Low Limit	Normal	Alarm	Miscellaneous: Trending	User Adjustable	Runtime	Accumulator	Flow	Alarm Class: Alarm	Alert	Log Only	Comm Loss	Instance	Description	Notes
Hot Water System: Differential Pressure Active Setpt.															X										Note 1
Hot Water System: Differential Pressure Min							5 psig								X										Note 1
Hot Water System: Differential Pressure Max							13 psig								X										Note 1
Hot Water System: Differential Pressure Reset							2 psig	15 min							X										Note 1
Hot Water System: Supply Temp	X	X												X											
Hot Water System: Return Temp	X	X												X											
Hot Water System: Glycol Makeup Status		X																							
Hot Water System: Makeup Water Filter Status		X																							
Master Office: Outdoor Air Temp	X			X																					
Hot Water System: Pump #1 Failure	X																		X						
Hot Water System: Pump #1 In Hand																			X						
Hot Water System:: Pump #1 VFD Fault																			X						
Hot Water System: Pump #2 Failure	X																		X						
Hot Water System: Pump #2 In Hand																			X						
Hot Water System:: Pump #2 VFD Fault																									
Hot Water System: High Differential Pressure										+25%					X										Note 1
Hot Water System: Low Differential Pressure											-25%				X										Note 1
Hot Water System: High Supply Temp										200°F					X				X						
Hot Water System: Low Supply Temp											100°F				X				X						
Hot Water System: High Makeup Water Usage		X													X										
Hot Water System: Glycol Makeup Alarm																			X						Note 3
Hot Water System: High Glycol Makeup Usage															X				X						Note 3
Hot Water System: Dirty Makeup Water Filter		X													X					X					
Boiler Hot Water Supply Temp	X			X																					
Boiler Hot Water Return Temp	X			X																					Note 4
																									Note 4

Notes:
1) NA. Hot water system is constant volume
2) NA. Hot Water System is Cons Vol. Integrate through BACnet for info only
3) NA. No Glycol Present
4) Provide for Each Boiler
5) NA. Boiler circulation pump not present
6)

CONDENSING BOILERS

Point Name	Display on Graphic?	Point Type: Hardware Input	Hardware Output	Software	Hardware Interlock	Wireless	Default Value	Text: Time Delay	Dead band	High Limit	Low Limit	Normal	Alarm	Miscellaneous: Trending	User Adjustable	Runtime	Accumulator	Flow	Alarm Class: Alarm	Alert	Log Only	Comm Loss	Instance	Description	Notes
Hot Water System: Status	X			X																					
Hot Water System: Boiler Emergency Shutdown			BO																X						
B-: Isolation Valve Status	X	BI																							
B-**: Pump Status	X			X																					Note 5
B-**: Status	X			X																					Note 4
B-**: Gas Modulation %	X			X																					Note 4
B-**: Hot Water Supply Temp	X			X																					Note 4
B-**: Hot Water Return Temp	X			X																					Note 4
B-**: Factory Alarm	X																		X						
B-**: Isolation Valve Failure																									
B-**: Isolation Valve in Hand																									
B-**: High Water Supply Temp							200°F												X						
B-**: Low Water Supply Temp							85°F												X						
B-**: Circulation Pump Failure																			X						Note 5
B-**: Circulation Pump in Hand																									Note 5

Notes:
1) NA. Hot water system is constant volume
2) NA. Hot Water System is Cons Vol. Integrate through BACnet for info only.
3) NA. No Glycol Present
4) Provide for Each Boiler
5) NA. Boiler circulation pump not present
6)

Point Name	Display on Graphic?	Point Type: Hardware Input	Hardware Output	Software	Hardware Interlock	Wireless	Default Value	Text: Time Delay	Dead band	High Limit	Low Limit	Normal	Alarm	Miscellaneous: Trending	User Adjustable	Runtime	Accumulator	Flow	Alarm Class: Alarm	Alert	Log Only	Comm Loss	Instance	Description	Notes
Hot Water System: Coils Needed Enable				X											X										
Hot Water System: OA Enable				X											X										
Hot Water System: Pump #1 Start/Stop			X												X										
Hot Water System: Pump #2 Start/Stop			X												X										
Hot Water System: Pump #1 VFD Input %															X										Note 1
Hot Water System: Pump #2 VFD Input %															X										Note 1
Hot Water System: Pump #1 VFD Output %				X																					Note 2
Hot Water System: Pump #2 VFD Output %				X																					Note 2
Hot Water System: Pump #1 VFD Output Hz				X																					Note 2
Hot Water System: Pump #2 VFD Output Hz				X																					Note 2
Hot Water System: Pump #1 Flow Status	X	X																	X						
Hot Water System: Pump #2 Flow Status	X	X																	X						
Hot Water System: Pump #1 Runtime																X									
Hot Water System: Pump #2 Runtime																X									
Hot Water System: Lead Pump Manual Override				X											X										
Hot Water System: Lead Pump Timed Override				X			7 Days								X										
Hot Water System: Lead Pump Run Time Equal Override															X										
Hot Water System: Differential Pressure Floor**																									Note 1
Hot Water System: VFD Min Speed							20%								X										Note 1
Hot Water System: VFD Low Speed							60%	5 min							X										Note 1
Hot Water System: VFD Max Speed							95%	5 min							X										Note 1
Hot Water System: Valve Status Setpt															X										Note 1
Hot Water System: Valve Status Min							60%	20 min							X										Note 1
Hot Water System: Valve Status Max							90%	20 min							X										Note 1

Notes:
1) NA. Hot water system is constant volume
2) NA. Hot Water System is Cons Vol. Integrate through BACnet for info only.
3) NA. No Glycol Present
4) Provide for Each Boiler
5) NA. Boiler circulation pump not present
6)

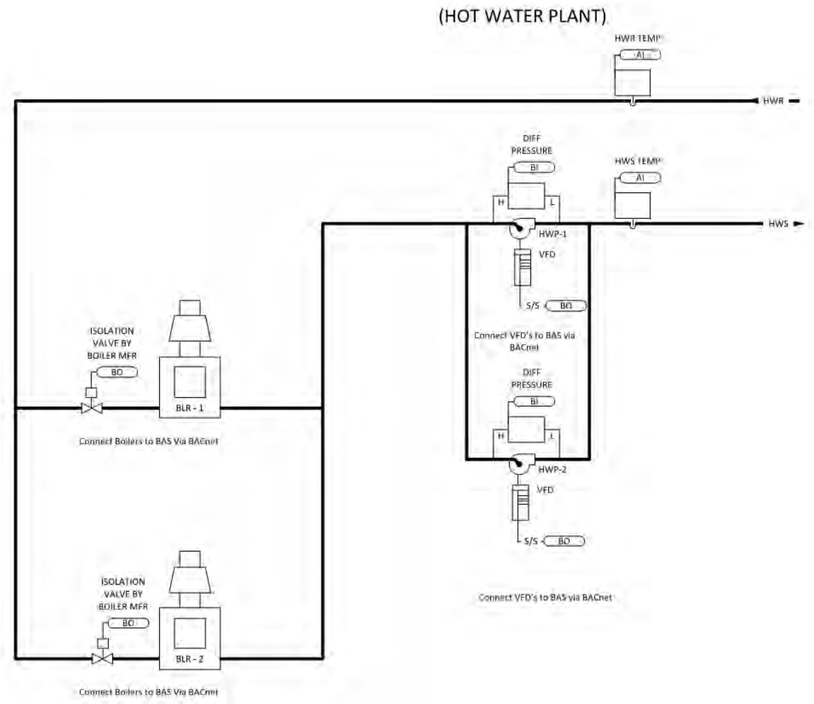

ULINE
12575 Uline Drive
Pleasant Prairie, WI 53158

ULINE
SHIPPING SUPPLY SPECIALISTS

NO	DESCRIPTION	DATE
	CP-2	07/10/15

ISSUANCE HISTORY - THIS SHEET

HGA NO: 3595-001-00

CONTROLS

DATE: May 8, 2015

CONSTRUCTION DOCUMENTS

M904

© COPYRIGHT HAMMEL, GREEN AND ABRAHAMSON, INC.

C:\Users\gladam\Documents\Revit Local Files\M15-Uline Mechanical-3595001100_gladam-PC7131.rvt

7/10/2015 9:44:15 AM

MISCELLANEOUS SPACES

Point Name	Display on Graphic	Point Type: Hardware Input	Hardware Output	Software	Hardware Interlock	Wireless	Default Value	Text: Time Delay	Dead band	High Limit	Low Limit	Text: Normal	Alarm	Miscellaneous: Trending	User Adjustable	Runtime	Accumulation	Flow	Alarm Class: Alarm	Alert	Log Only	Comm Loss	Instance	Description	Notes
CATERING SUP SPACE TEMPERATURE	X	AI				X								X											
CATERING SUP SPACE TEMP SETPOINT	X	AV				X								X											
CAT SUP/RR SUPPLY DAMPER	X		AO																						
CAT SUP/RR AIRFLOW	X	AI																							
CAT SUP DISCHARGE AIR TEMPERATURE	X	AI																							
CAT SUP/RR HOT WATER VALVE	X		FLTG																						
STOREROOM SPACE TEMPERATURE	X	AI				X								X											
STOREROOM SPACE TEMP SETPOINT	X			X		X								X											
STOEROOM SUPPLY DAMPER	X		AO																						
EXHAUST FAN EF-1 START/STOP	X		BO																						
EXHAUST FAN EF-1 STATUS	X	BI																							
EXHAUST FAN EF-2 START/STOP	X		BO																						
EXHAUST FAN EF-2 STATUS	X	BI																							
EXHAUST FAN %	X		AO																						
IT CLOSET TEMPERATURE	X	AI												X											
IT CLOSET TEMP SETPOINT	X	AI												X											
HOT WATER UNIT HEATER VALVE	X		BO																						
HOT WATER UNIT HEATER START/STOP	X		BO																						
ELECTRIC UNIT HEATER START/STOP	X																								
PLANT ZONE TEMPERATURE SETPOINT	X			X										X											
PLANT ZONE TEMPERATURE	X	AI				X								X					X						
HOT WATER UNIT HEATER LOCKOUT				X			>60 DEG								X										
ELECTRIC UNIT HEATER LOCKOUT	X			X			>60 DEG								X										
PLANT VENTILATION FAN START/STOP	X		BO																						
PLANT VENTILATION FAN STATUS	X	BI																							
PLANT VENTILATION FAN LOCKOUT							<85 DEG								X										

Notes:
1)
2)
3)
4)
5)
6)

CABINET UNIT HEATERS

Point Name	Display on Graphic	Point Type: Hardware Input	Hardware Output	Software	Hardware Interlock	Wireless	Default Value	Text: Time Delay	Dead band	High Limit	Low Limit	Text: Normal	Alarm	Miscellaneous: Trending	User Adjustable	Runtime	Accumulation	Flow	Alarm Class: Alarm	Alert	Log Only	Comm Loss	Instance	Description	Notes
MOS: Setpoint Adjust				X																					
CUH-**: MOS Occupied Heating Setpt				X			-1°F			X	X				X										
CUH-**: MOS Unoccupied Heating Setpt				X			-5°F			X	X				X										
CUH-**: Occupied Bypass Timer Status																									Note 1
CUH-**: Occupied Bypass Timer				X											X										Note 1
CUH-**: Zone Temp	X	AI								X	X			X											
CUH-**: Fan Output	X		BO												X										
CUH-**: Fan Min. Runtime															X										
CUH-**: Heating Valve Command	X	FLTG																							
CUH-**: Electric Heat Command																									Note 1
CUH-**: High Zone Temp															X										
CUH-**: Low Zone Temp															X										
CUH-**: Heating Failure																									
CUH-**: Heating in Hand																									
CUH-**: Fan Failure																									
CUH-**: Fan in Hand																									
Active Zone temperature Setpoint	X			X										X											

Notes:
1) Not Applicable
2)
3)
4)
5)
6)

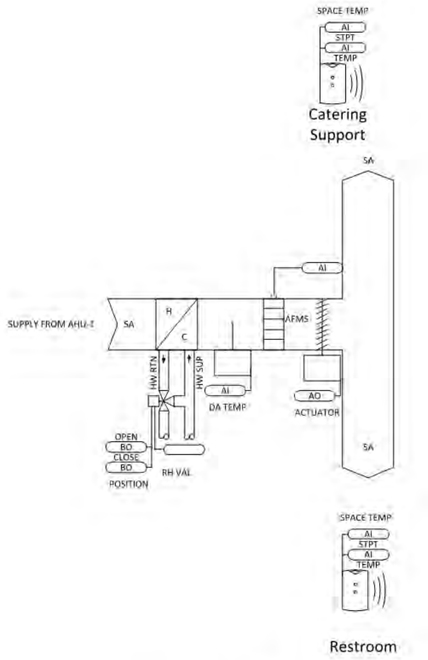

CATERING SUPPORT AND RESTROOMS

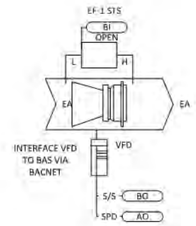

EF-1

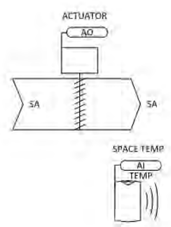

STOREROOM

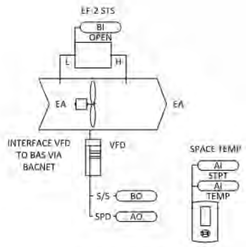

IT CLOSET/PLANT VENTILATION

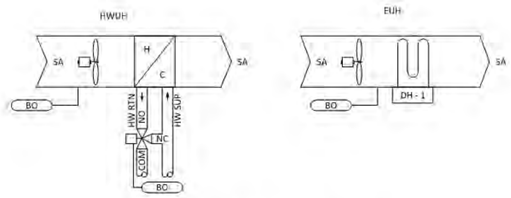

Packaged Plant Heating

CUH - 1

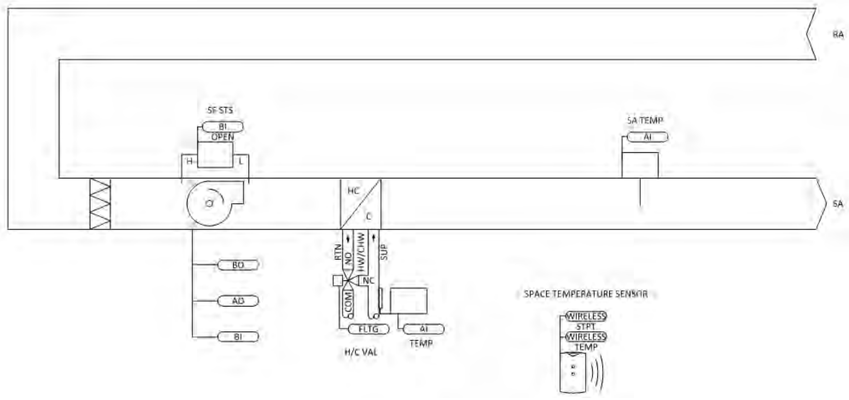

333 East Erie Street
Milwaukee, Wisconsin 53202
Telephone 414.278.8200

ULINE
12575 Uline Drive
Pleasant Prairie, WI 53158

ULINE
SHIPPING SUPPLY SPECIALISTS

NO	DESCRIPTION	DATE
	CP-2	07/10/15

ISSUANCE HISTORY - THIS SHEET

HGA NO: 3595-001-00

CONTROLS

DATE: May 8, 2015

CONSTRUCTION DOCUMENTS

M905

© COPYRIGHT HAMMEL, GREEN AND ABRAHAMSON, INC.

7/10/2015 9:44:17 AM C:\Users\gladam\Documents\Revit Local Files\M15-Uline Mechanical-3595001100_gladam-PC7131.rvt

333 East Erie Street
Milwaukee, Wisconsin 53202
Telephone 414.278.8200

ULINE
12575 Uline Drive
Pleasant Prairie, WI 53158

ULINE
SHIPPING SUPPLY SPECIALISTS

UNIT HEATERS

Point Name	Display on Graphic?	Point Type: Hardware Input	Point Type: Hardware Output	Point Type: Software	Point Type: Hardware Interlock	Point Type: Wireless	Default Value	Time Delay	Dead band	High Limit	Low Limit	Text: Normal	Text: Alarm	Miscellaneous: Trending	Miscellaneous: User Adjustable	Miscellaneous: Runtime	Miscellaneous: Accumulator	Miscellaneous: Flow	Alarm Class: Alarm	Alarm Class: Alert	Alarm Class: Log Only	Comm Loss	Instance	Description	Notes
MOS: Setpoint Adjust				X																					
UH-**: MOS Occupied Heating Setpt				X			-1°F			X	X				X										
UH-**: MOS Unoccupied Heating Setpt				X			-5°F			X	X				X										
UH-**: Occupied Bypass Timer Status																									
UH-**: Occupied Bypass Timer				X											X										
UH-**: Zone Temp	X	AI								X	X			X											
UH-**: Fan Output	X		BO												X										
UH-**: Fan Min. Runtime															X										
UH-**: Heating Valve Command	X		BO																						
UH-**: Electric Heat Command	X																								
UH-**: High Zone Temp															X										
UH-**: Low Zone Temp															X										
UH-**: Heating Failure																									
UH-**: Heating In Hand																									
UH-**: Fan Failure																									
UH-**: Fan in Hand																									
Active Zone tempeature Setpoint	X			X										X											

Notes:
1)
2)
3)
4)
5)
6)

NO	DESCRIPTION	DATE
	CP-2	07/10/15

ISSUANCE HISTORY - THIS SHEET

HGA NO: 3595-001-00

CONTROLS

DATE: May 8, 2015

CONSTRUCTION DOCUMENTS

M906

© COPYRIGHT HAMMEL, GREEN AND ABRAHAMSON, INC.

7/10/2015 9:44:19 AM C:\Users\gladamr\Documents\Revit Local Files\M15-Uline Mechanical-3595001100_gladamr-PC7131.rvt

- ELBOW DOWN
- ELBOW UP
- TEE DOWN
- TEE UP
- FLOW DIRECTION
- SHUT-OFF VALVE
- BALANCING VALVE
- AUTOMATIC FLOW CONTROL VALVE
- VALVE IN VERTICAL PIPE
- CHECK VALVE (FLOW DIRECTION INDICATED)
- 2-WAY MODULATING CONTROL VALVE
- 3-WAY MODULATING CONTROL VALVE
- 2-WAY, 2-POSITION CONTROL VALVE
- 3-WAY, 2-POSITION CONTROL VALVE
- PRESSURE REDUCING VALVE
- REDUCED PRESSURE ZONE BACKFLOW PREVENTER
- RELIEF VALVE (ELEVATION)
- RELIEF VALVE (PLAN VIEW)
- FLOW MEASURING DEVICE
- STRAINER
- STRAINER W/ BLOWDOWN VALVE
- EXPANSION JOINT
- FLEXIBLE CONNECTION
- UNION
- PIPE ANCHOR
- PIPE GUIDE
- MANUAL AIR VENT
- ECCENTRIC REDUCER
- CONCENTRIC REDUCER
- SENSOR WELL
- TEST PLUG
- THERMOMETER
- PRESSURE GAUGE
- TEMPERATURE GAUGE
- CONNECTION
- CONNECTION (TOP)
- CONNECTION (BOTTOM)
- CLEANOUT
- HOSE BIBB (HB) OR WALL HYDRANT (WH)
- PITCH PIPE DOWN
- STEAM TRAP
- FLOOR DRAIN (FD)
- ROOF DRAIN (RD)
- AREA DRAIN (AD)
- FLOOR SINK (FS)
- TRENCH DRAIN (TD)

6 PIPING SYMBOLS
NO SCALE

	COLD WATER (CW)
	HOT WATER (HW)
	RECIRCULATING HOT WATER (RHW) TEMPERATURE INDICATED AS NEEDED
W	SANITARY WASTE
NP	NON-POTABLE WATER
PW	PUMPED WASTE (SEWAGE FORCED MAIN)
V	VENT
SV	SPECIAL VENT
AV	ACID VENT
IV	INFLAMMABLE VENT
RW	STORM WATER/RAIN WATER
ORW	OVERFLOW STORM WATER/RAIN WATER
PS	PUMPED STORM (SEWAGE FORCED MAIN)
D	DRAIN
CD	CONDENSATE DRAIN
G	NATURAL GAS
HWS	HEATING WATER SUPPLY
HWR	HEATING WATER RETURN
HHWS	HIGH TEMPERATURE HEATING WATER SUPPLY
HHWR	HIGH TEMPERATURE HEATING WATER RETURN
CHWS	CHILLED WATER SUPPLY
CHWR	CHILLED WATER RETURN
CWS	CONDENSER WATER SUPPLY
CWR	CONDENSER WATER RETURN
LPS	LOW PRESSURE STEAM
LPR	LOW PRESSURE RETURN
HPS	HIGH PRESSURE STEAM
HPR	HIGH PRESSURE RETURN
SV	STEAM VENT
PC	PUMPED CONDENSATE
GS	GLYCOL SUPPLY
GR	GLYCOL RETURN
RL	REFRIGERANT LIGUID
RS	REFRIGERANT SUCTION
HG	REFRIGERANT HOT GAS
FOF	FUEL OIL FILL
FOV	FUEL OIL VENT
FOS	FUEL OIL SUPPLY
FOR	FUEL OIL RETURN
FOT	FUEL OIL TRANSFER
GA	GAUGE LINE
HT	HEAT TRACING

7 PIPING DESIGNATIONS
NO SCALE

MA	MEDICAL AIR
MV	MEDICAL VACUUM
O2	OXYGEN
N2	NITROGEN
CO2	CARBON DIOXIDE
N20	NITROUS OXIDE
WAG	WASTE ANESTHETIC GAS DISPOSAL
ZVB	ZONE VALVE BOX (ZVB)
AAP	AREA ALARM PANEL (AAP)
MAP	MASTER ALARM PANEL (MAP)
V	MEDICAL VACUUM OUTLET
A	MEDICAL AIR OUTLET
O	OXYGEN OUTLET
N	NITROGEN OUTLET
CO/WGNO	NITROUS OUTLET
	WASTE GAS
	CARBON DIOXIDE OUTLET

8 MEDICAL GAS DESIGNATIONS & SYMBOLS
NO SCALE

F	FIRE PROTECTION PIPING
D	DRAIN PIPING
	UPRIGHT SPRINKLERS
	PENDANT SPRINKLERS
	RECESSED SPRINKLERS
	FLUSH CONCEALED SPRINKLERS
	SIDEWALL SPRINKLERS
FDV	FIRE DEPARTMENT VALVE
F	FLOW SWITCH
	STANDPIPE
	INSPECTORS VALVE
	SUPERVISED VALVE
	DOUBLE DETECTOR CHECK VALVE
	CHECK VALVE WITH BALL DRIP
	FIRE DEPARTMENT CONNECTION
	FIRE PUMP TEST CONNECTION
	DRY PIPE VALVE
	REACTION VALVE
	FLOW SWITCH

9 FIRE PROTECTION DESIGNATIONS & SYMBOLS
NO SCALE

hga.
333 East Erie Street
Milwaukee, Wisconsin 53202
Telephone 414.278.8200

ULINE
12575 Uline Drive
Pleasant Prairie, WI 53158

ULINE
SHIPPING SUPPLY SPECIALISTS

NO	DESCRIPTION	DATE
	CP-2	07/10/15

ISSUANCE HISTORY - THIS SHEET

HGA NO: 3595-001-00

PLUMBING SYMBOLS & ABBREVIATIONS

DATE: May 8, 2015

CONSTRUCTION DOCUMENTS

P001

© COPYRIGHT HAMMEL, GREEN AND ABRAHAMSON, INC.

7/10/2015 9:16:33 AM C:\Users\gbrandens\Documents\Revit Local Files\P15_3595001100_UlineConferenceCenter_gbrandens-PC7615.rvt

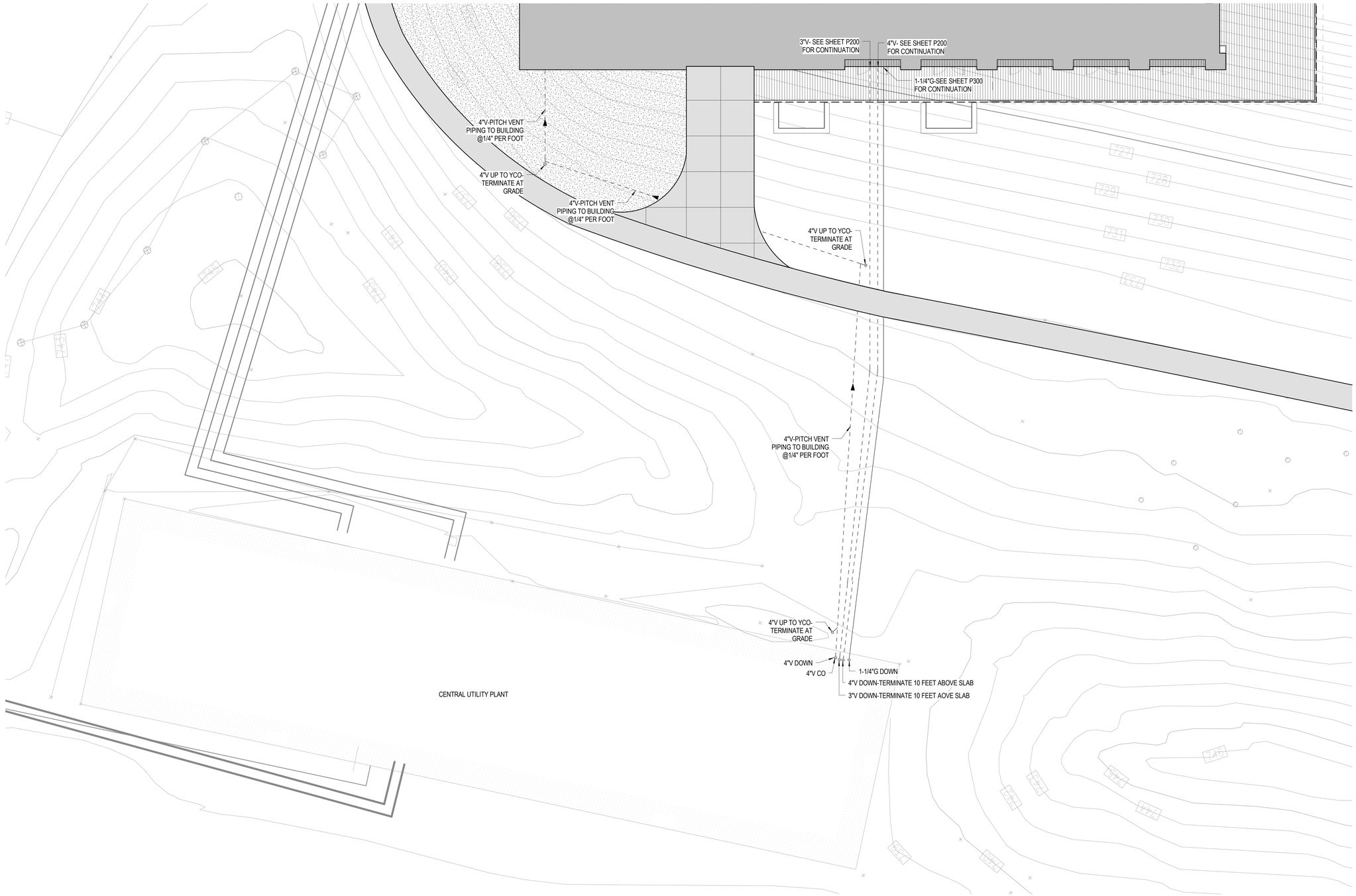

1 PLUMBING SITE PLAN
1/8" = 1'-0"

C:\Users\gbranders\Documents\Revit Local Files\P15_3595001\00_UlineConferenceCenter_gbranders-PC7815.rvt

7/10/2015 9:16:34 AM

hga.
333 East Erie Street
Milwaukee, Wisconsin 53202
Telephone 414.278.8200

ULINE
12575 Uline Drive
Pleasant Prairie, WI 53158

ULINE
SHIPPING SUPPLY SPECIALISTS

NO	DESCRIPTION	DATE
	CP-2	07/10/15

ISSUANCE HISTORY - THIS SHEET

HGA NO: 3595-001-00

PLUMBING SITE PLAN

DATE: May 8, 2015

CONSTRUCTION DOCUMENTS

P040

© COPYRIGHT HAMMEL, GREEN AND ABRAHAMSON, INC.

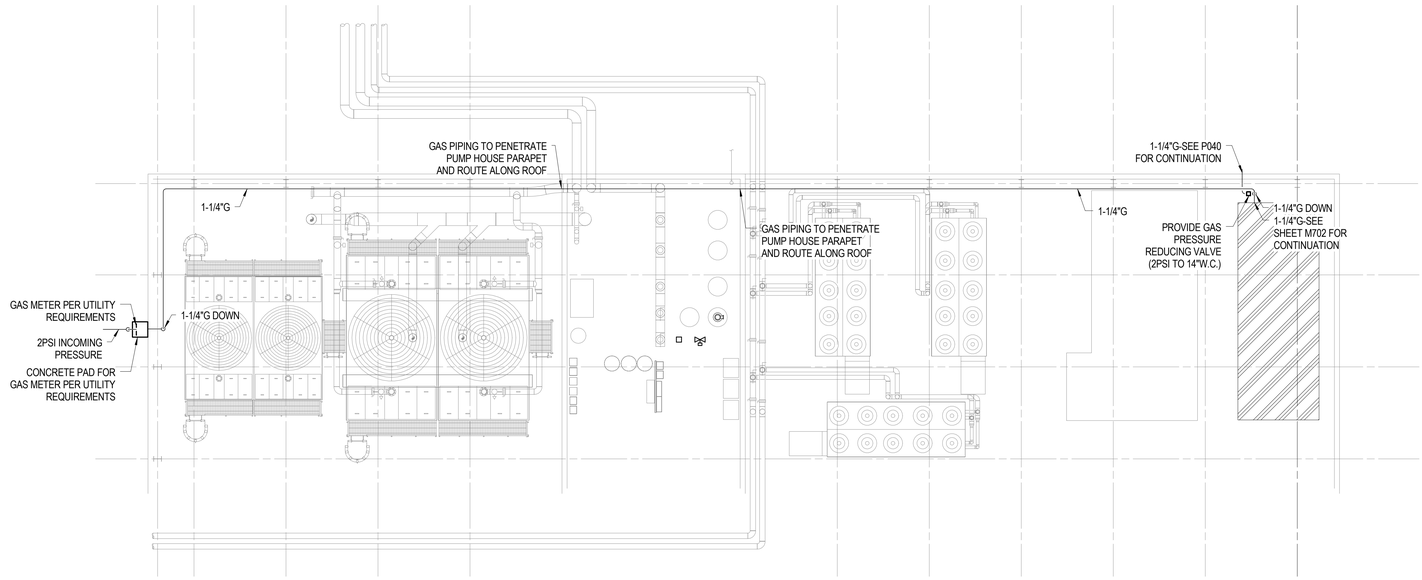

1 CUP PLUMBING PLAN
1/8" = 1'-0"

333 East Erie Street
Milwaukee, Wisconsin 53202
Telephone 414.278.8200

ULINE
12575 Uline Drive
Pleasant Prairie, WI 53158

ULINE
SHIPPING SUPPLY SPECIALISTS

NO	DESCRIPTION	DATE
	CP-2	07/10/15

ISSUANCE HISTORY - THIS SHEET

HGA NO: 3595-001-00

CUP PLUMBING PLAN

DATE: May 8, 2015

CONSTRUCTION DOCUMENTS

P150

© COPYRIGHT HAMMEL, GREEN AND ABRAHAMSON, INC.

C:\Users\gthrandens\Documents\Revit Local Files\P15_3595001100_UlineConferenceCenter_gthrandens-PC7615.rvt

7/10/2015 9:16:35 AM

333 East Erie Street
Milwaukee, Wisconsin 53202
Telephone 414.278.8200

GENERAL NOTES:

A. CONTRACTOR IS RESPONSIBLE FOR ALL CUTTING AND PATCHING REQUIRED FOR INSTALLATION OF PIPING AND ACCESSORIES. ALL PENETRATIONS THROUGH FIRE RATED WALLS AND FLOORS SHALL BE PROPERLY FIRESTOPPED. METHOD OF FIRESTOPPING SHALL BE REVIEWED AND APPROVED BY ARCHITECT PRIOR TO INSTALLATION.

B. CONTRACTOR IS RESPONSIBLE TO PROTECT PIPING DURING ALL CONSTRUCTION WORK. CLEAN AND PRESSURE TEST PIPING TO VALIDATE THE SYSTEM IS OPERATING IN ACCORDANCE WITH THE OWNERS' PIPING STANDARDS PRIOR TO OCCUPANCY.

C. FOR FIXTURE TYPE AND CONNECTION SIZE REFER TO THE FIXTURE CONNECTION SCHEDULE ON P800.

D. PLUMBING PIPING SHOWN IS SCHEMATIC IN NATURE. ROUTING MAY BE REVISED PER LOCAL CODES AND AHJ AND SHALL BE COORDINATED WITH ALL TRADES.

E. CONTRACTOR SHALL COORDINATE ROUTING OF PLUMBING PIPING WITH ALL TRADES BEFORE WORK BEGINS.

F. FOR ADDITIONAL PIPE SIZE INFORMATION SEE PLUMBING ISOMETRIC DIAGRAMS.

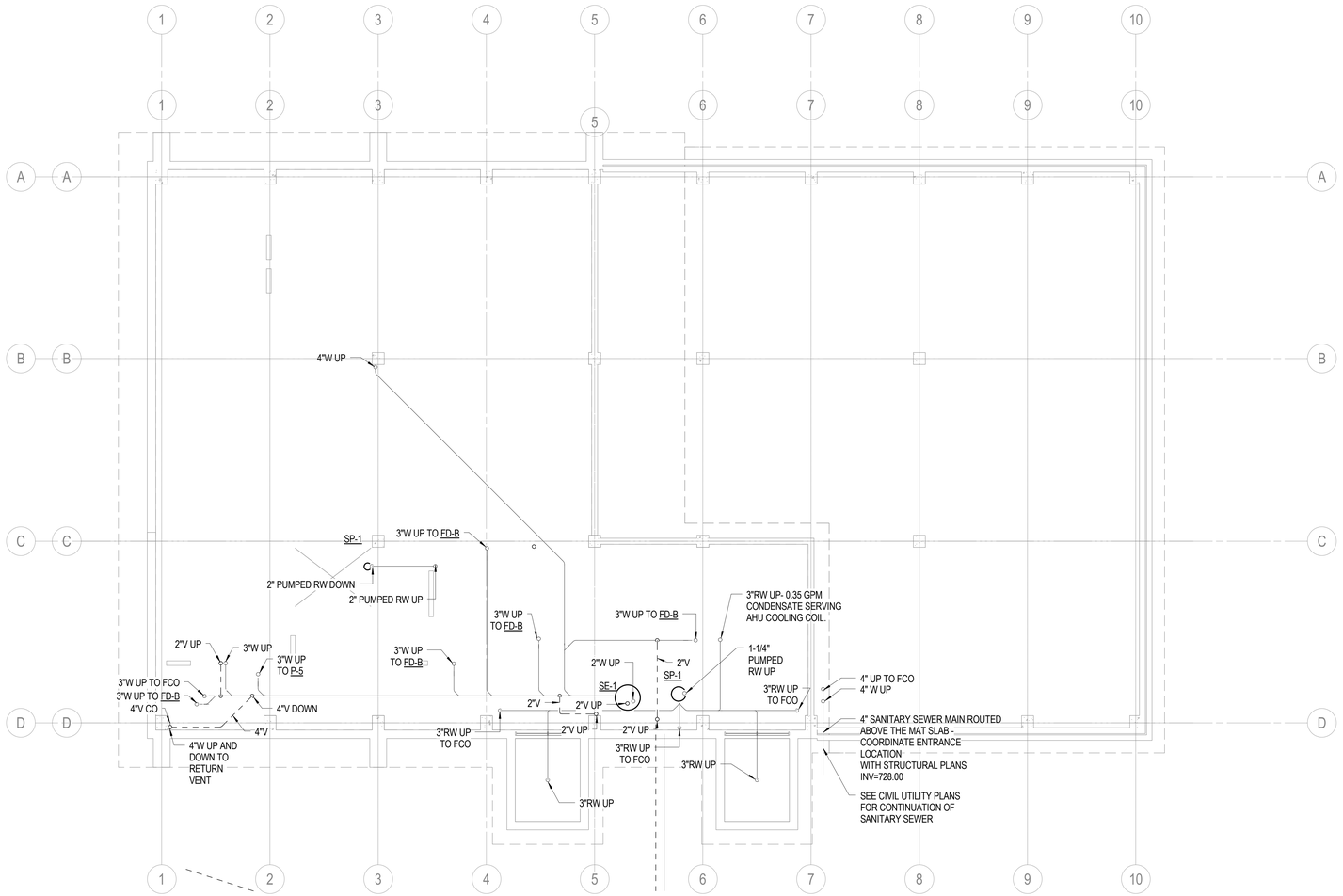

1 FOUNDATION WASTE, VENT, AND STORM FLOOR
1/8" = 1'-0"

ULINE
12575 Uline Drive
Pleasant Prairie, WI 53158

NO	DESCRIPTION	DATE
	CP-2	07/10/15

ISSUANCE HISTORY - THIS SHEET

HGA NO: 3595-001-00

FOUNDATION WASTE, VENT, AND STORM FLOOR PLAN

DATE: May 8, 2015

CONSTRUCTION DOCUMENTS

P199

© COPYRIGHT HAMMEL, GREEN AND ABRAHAMSON, INC.

7/10/2015 9:16:36 AM C:\Users\gbrandens\Documents\Revit Local Files\P15_359500100_UlineConferenceCenter_gbrandens-PC7615.rvt

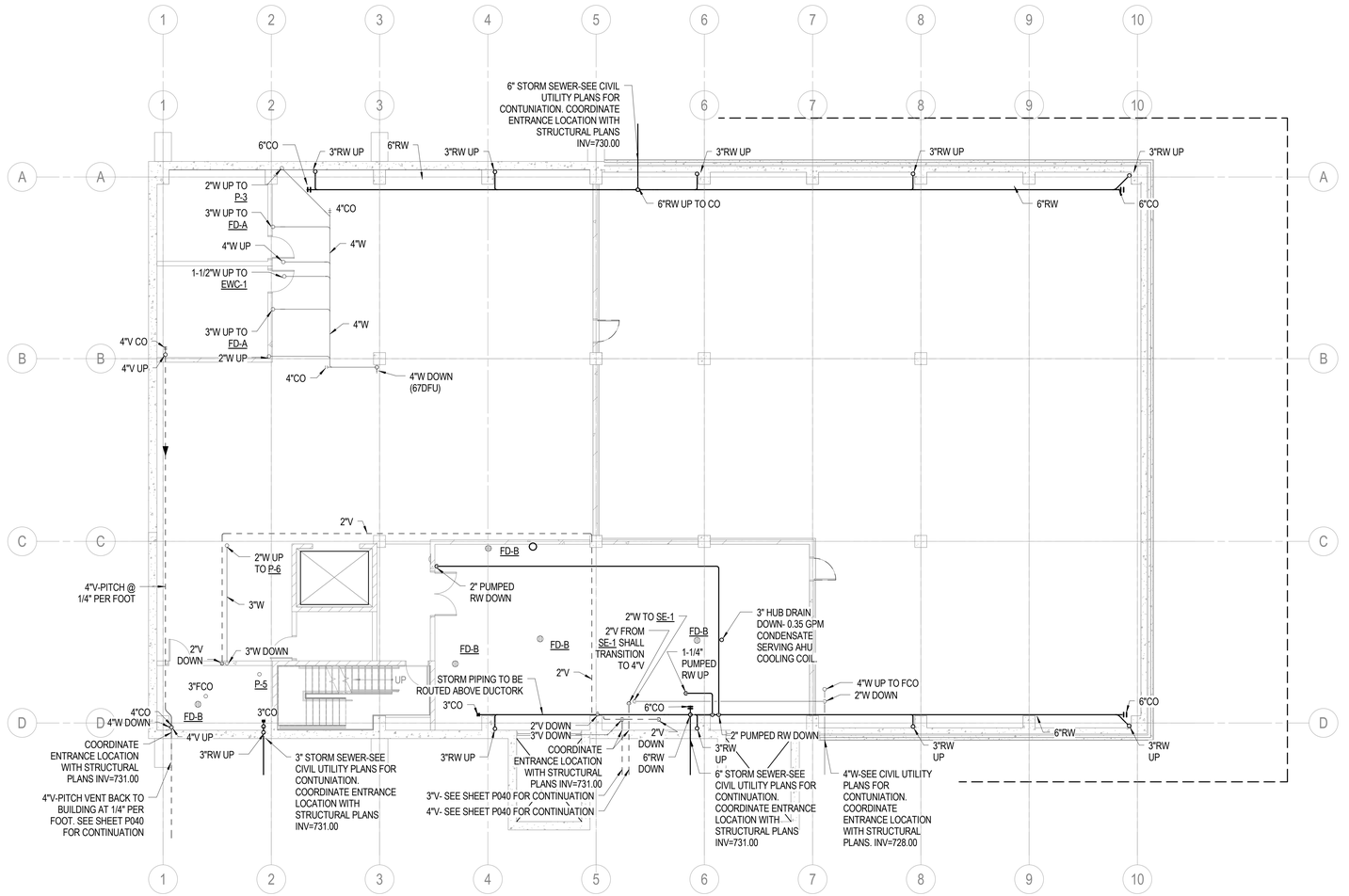

1 LOWER LEVEL WASTE, VENT, AND STORM FLOOR PLAN
1/8" = 1'-0"

GENERAL NOTES:

A. CONTRACTOR IS RESPONSIBLE FOR ALL CUTTING AND PATCHING REQUIRED FOR INSTALLATION OF PIPING AND ACCESSORIES. ALL PENETRATIONS THROUGH FIRE RATED WALLS AND FLOORS SHALL BE PROPERLY FIRESTOPPED. METHOD OF FIRESTOPPING SHALL BE REVIEWED AND APPROVED BY ARCHITECT PRIOR TO INSTALLATION.

B. CONTRACTOR IS RESPONSIBLE TO PROTECT PIPING DURING ALL CONSTRUCTION WORK. CLEAN AND PRESSURE TEST PIPING TO VALIDATE THE SYSTEM IS OPERATING IN ACCORDANCE WITH THE OWNERS' PIPING STANDARDS PRIOR TO OCCUPANCY.

C. FOR FIXTURE TYPE AND CONNECTION SIZE REFER TO THE FIXTURE CONNECTION SCHEDULE ON P800.

D. PLUMBING PIPING SHOWN IS SCHEMATIC IN NATURE. ROUTING MAY BE REVISED PER LOCAL CODES AND AHJ AND SHALL BE COORDINATED WITH ALL TRADES.

E. CONTRACTOR SHALL COORDINATE ROUTING OF PLUMBING PIPING WITH ALL TRADES BEFORE WORK BEGINS.

F. FOR ADDITIONAL PIPE SIZE INFORMATION SEE PLUMBING ISOMETRIC DIAGRAMS.

hga.
333 East Erie Street
Milwaukee, Wisconsin 53202
Telephone 414.278.8200

ULINE
12575 Uline Drive
Pleasant Prairie, WI 53158

ULINE
SHIPPING SUPPLY SPECIALISTS

NO	DESCRIPTION	DATE
	CP-2	07/10/15

ISSUANCE HISTORY - THIS SHEET

HGA NO: 3595-001-00

LOWER LEVEL WASTE, VENT, AND STORM FLOOR PLAN

DATE: May 8, 2015

CONSTRUCTION DOCUMENTS

P200

© COPYRIGHT HAMMEL, GREEN AND ABRAHAMSON, INC.

7/10/2015 9:16:38 AM C:\Users\gbranders\Documents\Revit Local Files\P15_3595001100_UlineConferenceCenter_gbranders-PC7615.rvt

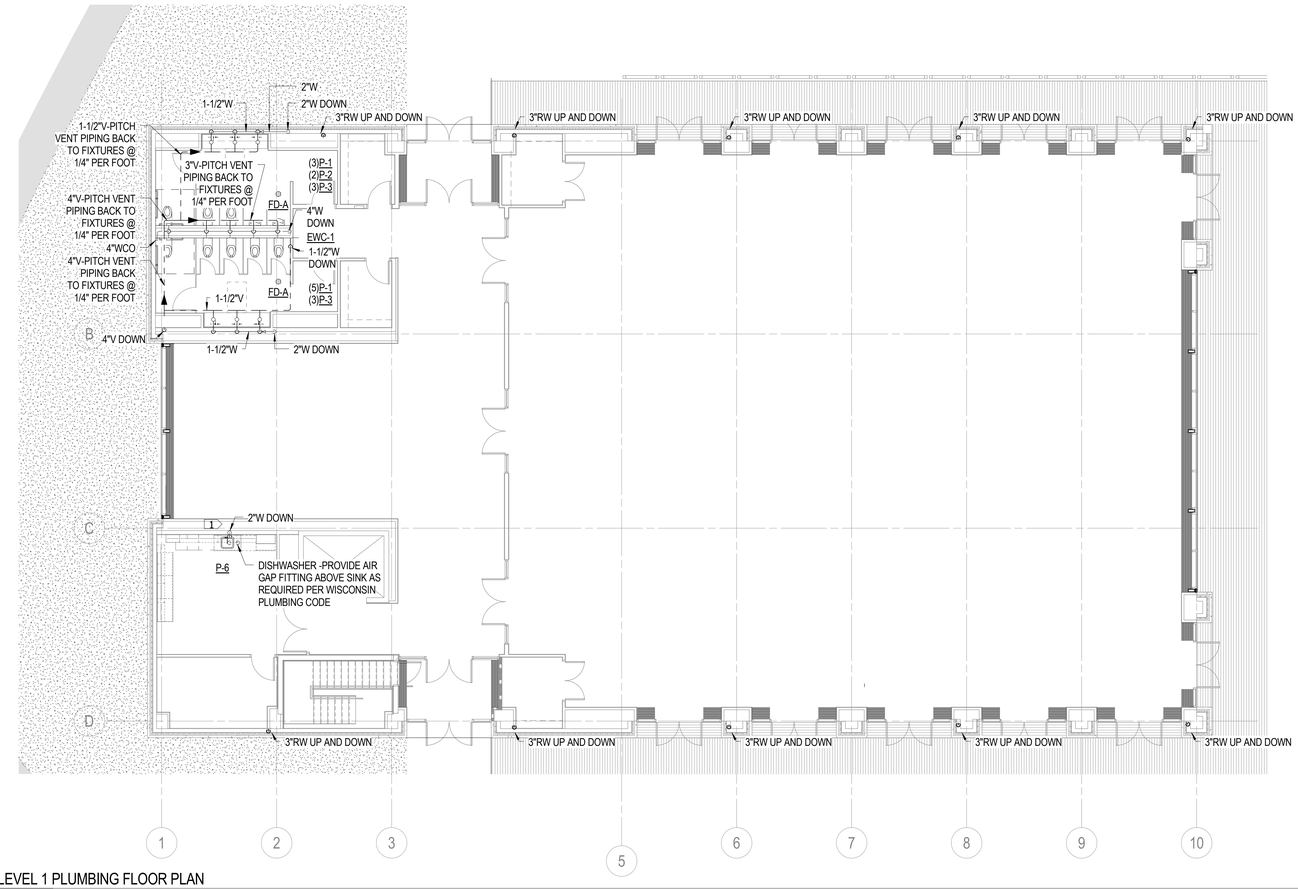

1 LEVEL 1 PLUMBING FLOOR PLAN
1/8" = 1'-0"

GENERAL NOTES:

A. CONTRACTOR IS RESPONSIBLE FOR ALL CUTTING AND PATCHING REQUIRED FOR INSTALLATION OF PIPING AND ACCESSORIES. ALL PENETRATIONS THROUGH FIRE RATED WALLS AND FLOORS SHALL BE PROPERLY FIRESTOPPED. METHOD OF FIRESTOPPING SHALL BE REVIEWED AND APPROVED BY ARCHITECT PRIOR TO INSTALLATION.

B. CONTRACTOR IS RESPONSIBLE TO PROTECT PIPING DURING ALL CONSTRUCTION WORK. CLEAN AND PRESSURE TEST PIPING TO VALIDATE THE SYSTEM IS OPERATING IN ACCORDANCE WITH THE OWNERS' PIPING STANDARDS PRIOR TO OCCUPANCY.

C. FOR FIXTURE TYPE AND CONNECTION SIZE REFER TO THE FIXTURE CONNECTION SCHEDULE ON P800.

D. PLUMBING PIPING SHOWN IS SCHEMATIC IN NATURE. ROUTING MAY BE REVISED PER LOCAL CODES AND AHJ AND SHALL BE COORDINATED WITH ALL TRADES.

E. CONTRACTOR SHALL COORDINATE ROUTING OF PLUMBING PIPING WITH ALL TRADES BEFORE WORK BEGINS.

F. FOR ADDITIONAL PIPE SIZE INFORMATION SEE PLUMBING ISOMETRIC DIAGRAMS.

KEYNOTES: 1

1. 1-1/2"V-TERMINATE WITH (1) PRO FLOW AIR ADMITTANCE VALVE MODEL PFAAV6 UNDER WITHIN CABINET. SHALL BE INSTALLED 4" ABOVE THE HORIZONTAL BRANCH DRAIN OR FIXTURE TRAP BEING VENTED. SHALL BE ACCESSIBLE FOR INSPECTION, REPAIR, AND SERVICE. SHALL BE INSTALLED IN A VERTICAL ORIENTATION NOT EXCEEDING 15 DEGREES FROM PLUMB.

333 East Erie Street
Milwaukee, Wisconsin 53202
Telephone 414.278.8200

ULINE
12575 Uline Drive
Pleasant Prairie, WI 53158

ULINE
SHIPPING SUPPLY SPECIALISTS

NO	DESCRIPTION	DATE
	CP-2	07/10/15

ISSUANCE HISTORY - THIS SHEET

HGA NO: 3595-001-00

LEVEL 1 WASTE, VENT, AND STORM FLOOR PLAN

DATE: May 8, 2015

CONSTRUCTION DOCUMENTS

P201

© COPYRIGHT HAMMEL, GREEN AND ABRAHAMSON, INC.

C:\Users\gtbrandes\Documents\Revit Local Files\P15_3595001\00_UlineConferenceCenter_gtbrandes-PC7615.rvt
7/10/2015 9:16:40 AM

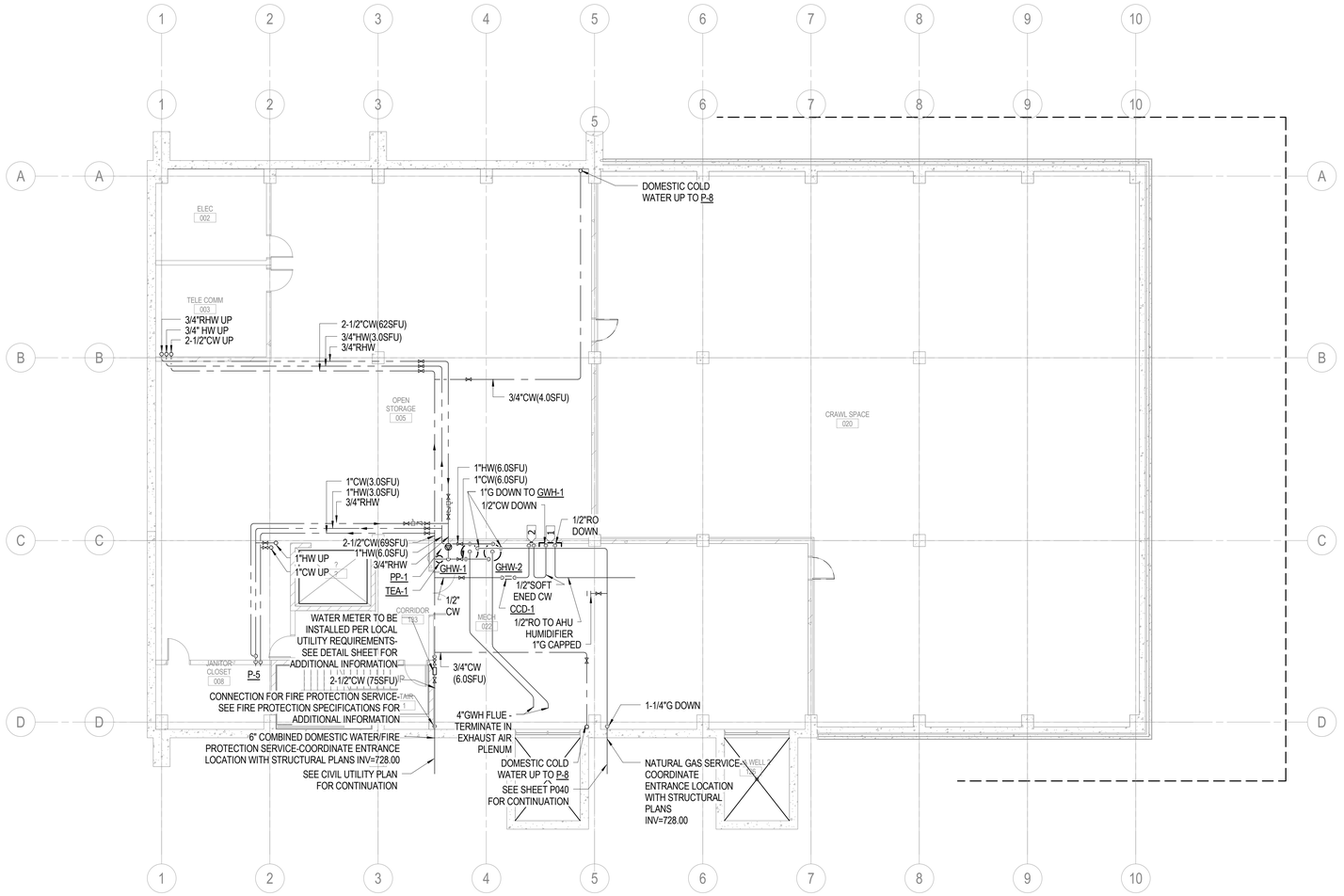

1 LOWER LEVEL DOMESTIC WATER FLOOR PLAN
1/8" = 1'-0"

GENERAL NOTES:

A. CONTRACTOR IS RESPONSIBLE FOR ALL CUTTING AND PATCHING REQUIRED FOR INSTALLATION OF PIPING AND ACCESSORIES. ALL PENETRATIONS THROUGH FIRE RATED WALLS AND FLOORS SHALL BE PROPERLY FIRESTOPPED. METHOD OF FIRESTOPPING SHALL BE REVIEWED AND APPROVED BY ARCHITECT PRIOR TO INSTALLATION.

B. CONTRACTOR IS RESPONSIBLE TO PROTECT PIPING DURING ALL CONSTRUCTION WORK. CLEAN AND PRESSURE TEST PIPING TO VALIDATE THE SYSTEM IS OPERATING IN ACCORDANCE WITH THE OWNERS' PIPING STANDARDS PRIOR TO OCCUPANCY.

C. FOR FIXTURE TYPE AND CONNECTION SIZE REFER TO THE FIXTURE CONNECTION SCHEDULE ON P800.

D. PLUMBING PIPING SHOWN IS SCHEMATIC IN NATURE. ROUTING MAY BE REVISED PER LOCAL CODES AND AHJ AND SHALL BE COORDINATED WITH ALL TRADES.

E. CONTRACTOR SHALL COORDINATE ROUTING OF PLUMBING PIPING WITH ALL TRADES BEFORE WORK BEGINS.

F. FOR ADDITIONAL PIPE SIZE INFORMATION SEE PLUMBING ISOMETRIC DIAGRAMS.

KEYNOTES: 1

1. CULLIGAN MATRIX SOLUTIONS RO UNIT SERVING AIR HANDLING UNIT HUMIDIFICATION MODEL E1-2S, 0.33 HP MOTOR, 0.35 GPM/ 500GPD CAPACITY
2. CULLIGAN WATER SOFTENER MODEL HE 1.5 UF 060, 31.5 GPM PEAK FLOW RATE

333 East Erie Street
Milwaukee, Wisconsin 53202
Telephone 414.278.8200

ULINE
12575 Uline Drive
Pleasant Prairie, WI 53158

ULINE
SHIPPING SUPPLY SPECIALISTS

NO	DESCRIPTION	DATE
	CP-2	07/10/15

ISSUANCE HISTORY - THIS SHEET

HGA NO: 3595-001-00

LOWER LEVEL DOMESTIC WATER FLOOR PLAN

DATE: May 8, 2015

CONSTRUCTION DOCUMENTS

P300

© COPYRIGHT HAMMEL, GREEN AND ABRAHAMSON, INC.

7/10/2015 9:16:42 AM C:\Users\gbranders\Documents\Revit Local Files\P15_3595001\00_ULineConferenceCenter_gbranders-PC7615.rvt

GENERAL NOTES:

A. CONTRACTOR IS RESPONSIBLE FOR ALL CUTTING AND PATCHING REQUIRED FOR INSTALLATION OF PIPING AND ACCESSORIES. ALL PENETRATIONS THROUGH FIRE RATED WALLS AND FLOORS SHALL BE PROPERLY FIRESTOPPED. METHOD OF FIRESTOPPING SHALL BE REVIEWED AND APPROVED BY ARCHITECT PRIOR TO INSTALLATION.

B. CONTRACTOR IS RESPONSIBLE TO PROTECT PIPING DURING ALL CONSTRUCTION WORK. CLEAN AND PRESSURE TEST PIPING TO VALIDATE THE SYSTEM IS OPERATING IN ACCORDANCE WITH THE OWNERS' PIPING STANDARDS PRIOR TO OCCUPANCY.

C. FOR FIXTURE TYPE AND CONNECTION SIZE REFER TO THE FIXTURE CONNECTION SCHEDULE ON P800.

D. PLUMBING PIPING SHOWN IS SCHEMATIC IN NATURE. ROUTING MAY BE REVISED PER LOCAL CODES AND AHJ AND SHALL BE COORDINATED WITH ALL TRADES.

E. CONTRACTOR SHALL COORDINATE ROUTING OF PLUMBING PIPING WITH ALL TRADES BEFORE WORK BEGINS.

F. FOR ADDITIONAL PIPE SIZE INFORMATION SEE PLUMBING ISOMETRIC DIAGRAMS.

1 LEVEL 1 DOMESTIC WATER FLOOR PLAN
1/8" = 1'-0"

333 East Erie Street
Milwaukee, Wisconsin 53202
Telephone 414.278.8200

ULINE
12575 Uline Drive
Pleasant Prairie, WI 53158

ULINE
SHIPPING SUPPLY SPECIALISTS

NO	DESCRIPTION	DATE
	CP-2	07/10/15

ISSUANCE HISTORY - THIS SHEET

HGA NO: 3595-001-00

LEVEL 1 DOMESTIC WATER FLOOR PLAN

DATE: May 8, 2015

CONSTRUCTION DOCUMENTS

P301

© COPYRIGHT HAMMEL, GREEN AND ABRAHAMSON, INC.

7/10/2015 9:16:45 AM C:\Users\gltranders\Documents\Revit Local Files\P15_3595001100_UlineConferenceCenter_gltranders-PCT615.rvt

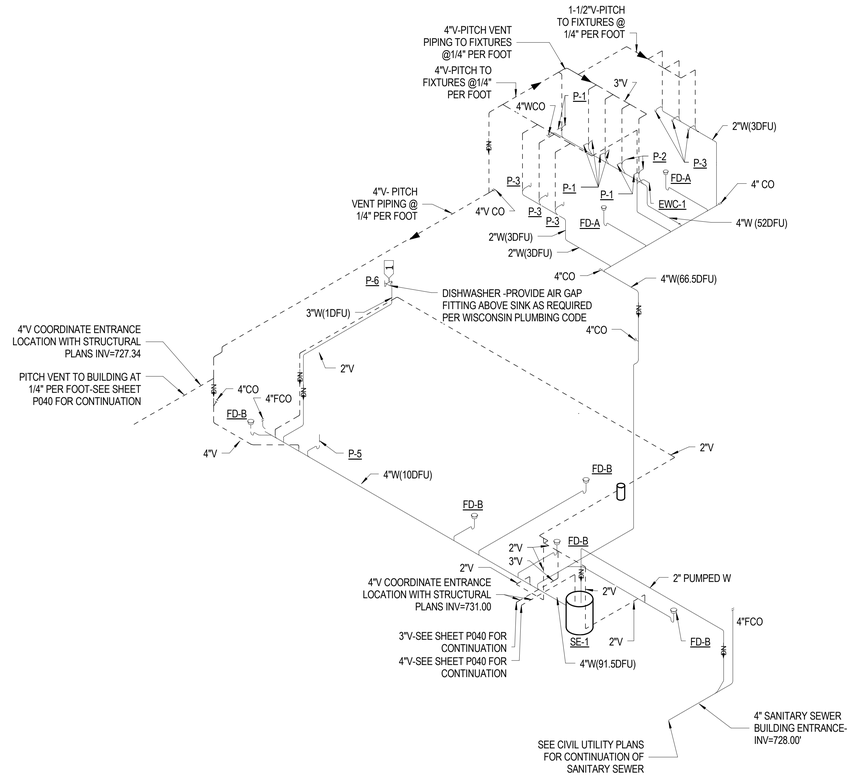

1 SANITARY AND VENT ISOMETRIC

GENERAL NOTES:

A. CONTRACTOR IS RESPONSIBLE FOR ALL CUTTING AND PATCHING REQUIRED FOR INSTALLATION OF PIPING AND ACCESSORIES. ALL PENETRATIONS THROUGH FIRE RATED WALLS AND FLOORS SHALL BE PROPERLY FIRESTOPPED. METHOD OF FIRESTOPPING SHALL BE REVIEWED AND APPROVED BY ARCHITECT PRIOR TO INSTALLATION.

B. CONTRACTOR IS RESPONSIBLE TO PROTECT PIPING DURING ALL CONSTRUCTION WORK. CLEAN AND PRESSURE TEST PIPING TO VALIDATE THE SYSTEM IS OPERATING IN ACCORDANCE WITH THE OWNERS' PIPING STANDARDS PRIOR TO OCCUPANCY.

C. FOR FIXTURE TYPE AND CONNECTION SIZE REFER TO THE FIXTURE CONNECTION SCHEDULE ON P600.

D. PLUMBING PIPING SHOWN IS SCHEMATIC IN NATURE. ROUTING MAY BE REVISED PER LOCAL CODES AND AHJ AND SHALL BE COORDINATED WITH ALL TRADES.

E. CONTRACTOR SHALL COORDINATE ROUTING OF PLUMBING PIPING WITH ALL TRADES BEFORE WORK BEGINS.

F. FOR ADDITIONAL PIPE SIZE INFORMATION SEE PLUMBING ISOMETRIC DIAGRAMS.

KEYNOTES: 1

1. 1-1/2"V-TERMINATE WITH (1) PRO FLOW AIR ADMITTANCE VALVE MODEL PFAAV6 UNDER WITHIN CABINET. SHALL BE INSTALLED 4" ABOVE THE HORIZONTAL BRANCH DRAIN OR FIXTURE TRAP BEING VENTED. SHALL BE ACCESSIBLE FOR INSPECTION, REPAIR, AND SERVICE. SHALL BE INSTALLED IN A VERTICAL ORIENTATION NOT EXCEEDING 15 DEGREES FROM PLUMB.

333 East Erie Street
Milwaukee, Wisconsin 53202
Telephone 414.278.8200

ULINE
12575 Uline Drive
Pleasant Prairie, WI 53158

ULINE
SHIPPING SUPPLY SPECIALISTS

NO	DESCRIPTION	DATE
	CP-2	07/10/15

ISSUANCE HISTORY - THIS SHEET

HGA NO: 3595-001-00

SANITARY AND VENT ISOMETRIC

DATE: May 8, 2015

CONSTRUCTION DOCUMENTS

P500

© COPYRIGHT HAMMEL, GREEN AND ABRAHAMSON, INC.

C:\Users\gtbrandes\Documents\Revit Local Files\P15_3595001100_UlineConferenceCenter_gtbrandes-PC7815.rvt
7/10/2015 9:16:46 AM

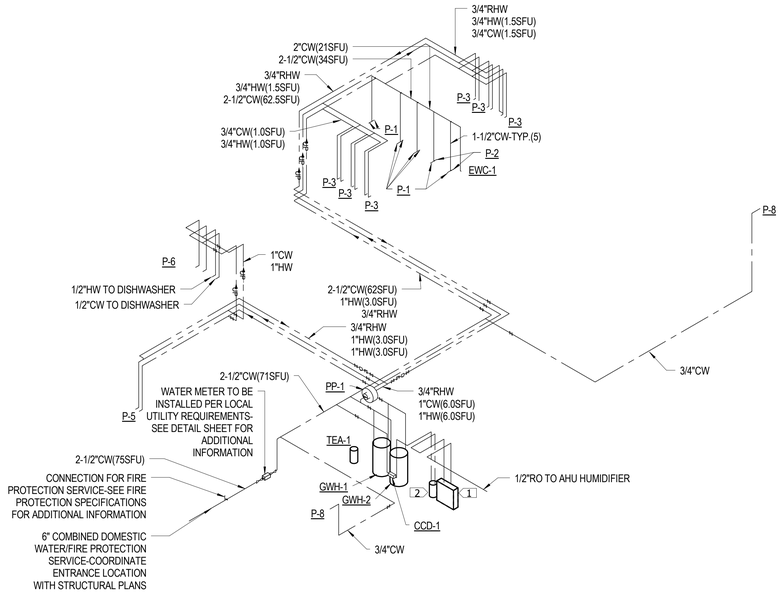

1 DOMESTIC WATER ISOMETRIC

GENERAL NOTES:

A. CONTRACTOR IS RESPONSIBLE FOR ALL CUTTING AND PATCHING REQUIRED FOR INSTALLATION OF PIPING AND ACCESSORIES. ALL PENETRATIONS THROUGH FIRE RATED WALLS AND FLOORS SHALL BE PROPERLY FIRESTOPPED. METHOD OF FIRESTOPPING SHALL BE REVIEWED AND APPROVED BY ARCHITECT PRIOR TO INSTALLATION.

B. CONTRACTOR IS RESPONSIBLE TO PROTECT PIPING DURING ALL CONSTRUCTION WORK. CLEAN AND PRESSURE TEST PIPING TO VALIDATE THE SYSTEM IS OPERATING IN ACCORDANCE WITH THE OWNERS' PIPING STANDARDS PRIOR TO OCCUPANCY.

C. FOR FIXTURE TYPE AND CONNECTION SIZE REFER TO THE FIXTURE CONNECTION SCHEDULE ON P800.

D. PLUMBING PIPING SHOWN IS SCHEMATIC IN NATURE. ROUTING MAY BE REVISED PER LOCAL CODES AND AHJ AND SHALL BE COORDINATED WITH ALL TRADES.

E. CONTRACTOR SHALL COORDINATE ROUTING OF PLUMBING PIPING WITH ALL TRADES BEFORE WORK BEGINS.

F. FOR ADDITIONAL PIPE SIZE INFORMATION SEE PLUMBING ISOMETRIC DIAGRAMS.

KEYNOTES: 1

1. CULLIGAN MATRIX SOLUTIONS RO UNIT SERVING AIR HANDLING UNIT HUMIDIFICATION MODEL E1-2S, 0.33 HP MOTOR, 0.35 GPM/ 500GPD CAPACITY
2. CULLIGAN WATER SOFTENER MODEL HE 1.5 UF 060, 31.5 GPM PEAK FLOW RATE

HGA
333 East Erie Street
Milwaukee, Wisconsin 53202
Telephone 414.278.8200

ULINE
12575 Uline Drive
Pleasant Prairie, WI 53158

ULINE
SHIPPING SUPPLY SPECIALISTS

NO	DESCRIPTION	DATE
	CP-2	07/10/15

ISSUANCE HISTORY - THIS SHEET

HGA NO: 3595-001-00

DOMESTIC WATER ISOMETRIC

DATE: May 8, 2015

CONSTRUCTION DOCUMENTS

P600

© COPYRIGHT HAMMEL, GREEN AND ABRAHAMSON, INC.

7/10/2015 9:16:47 AM C:\Users\gbrandens\Documents\Revit Local Files\P15_3595001100_UlineConferenceCenter_gbrandens-PC7615.rvt

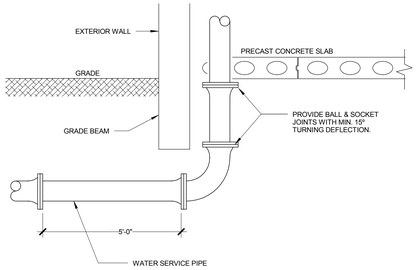

10 WATER SERVICE PIPE INSTALLATION AT BUILDING ENTRANCE POINT

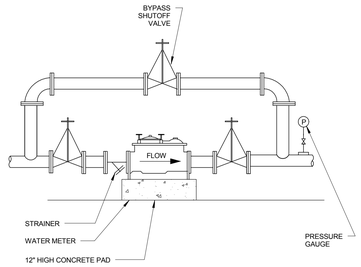

DESIGNER NOTES:
1. THIS ARRANGEMENT SHOULD BE USED IF REQUIRED BY LOCAL PLUMBING CODES OR REQUESTED BY OWNER.

9 WATER METER WITH BYPASS METER

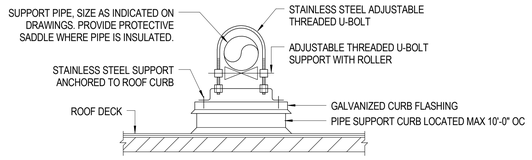

8 ROOF MOUNTED PIPE SUPPORT DETAIL

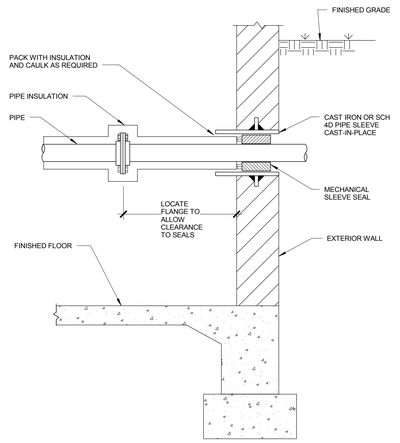

7 EXTERIOR WALL PIPE PENETRATION BELOW-GRADE

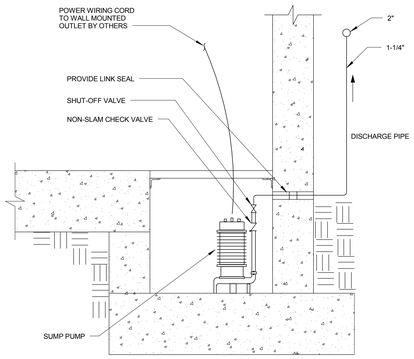

6 ELEVATOR SUMP PUMP

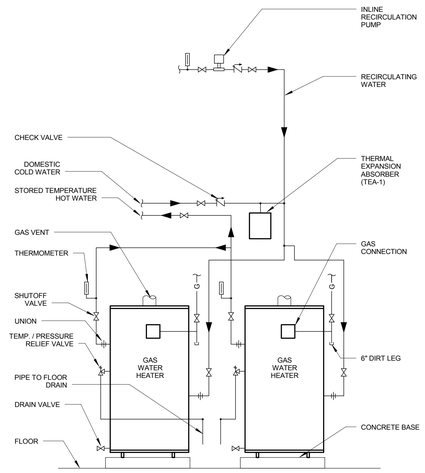

5 DUPLEX GAS WATER HEATER WITH RECIRCULATION PUMP

SIZING CHART

PLUMBING AND DRAINAGE INSTITUTE (P.D.I.) ARRESTER SYMBOL	A	B	C	D	E	F
FIXTURE UNIT RATING	1-11	12-32	33-60	61-113	114-154	155-330

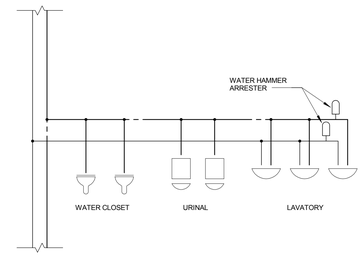

NOTE:
INSTALL WATER HAMMER ARRESTERS IN THE FOLLOWING LOCATIONS: PLUMBING FIXTURE GROUPS CONTAINING FLUSH VALVES, EQUIPMENT WITH AUTOMATIC FILL VALVES (DISHWASHERS CLOTHES WASHERS, HUMIDIFIERS, ETC.) SEE DIVISION 22 PLUMBING SPECIALTIES.

4 DOMESTIC WATER SHOCK ABSORBER LOCATIONS

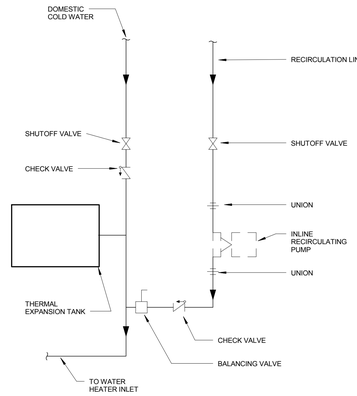

3 DOMESTIC HOT WATER RECIRCULATING PUMP

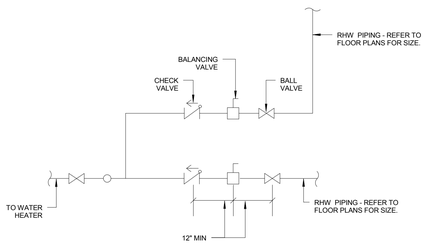

2 RHW BALANCING VALVE DETAIL

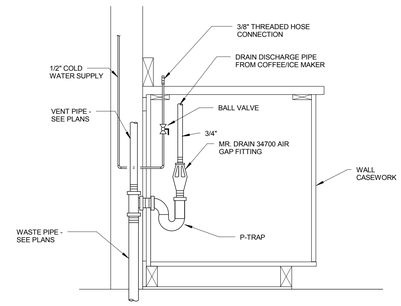

1 COFFEE/ICE MAKER SUPPLY AND DRAIN

hga
333 East Erie Street
Milwaukee, Wisconsin 53202
Telephone 414.278.8200

ULINE
12575 Uline Drive
Pleasant Prairie, WI 53158

ULINE
SHIPPING SUPPLY SPECIALISTS

NO	DESCRIPTION	DATE
	CP-2	07/10/15

ISSUANCE HISTORY - THIS SHEET

HGA NO: 3595-001-00

PLUMBING DETAILS

DATE: May 8, 2015

CONSTRUCTION DOCUMENTS

P700

© COPYRIGHT HAMMEL, GREEN AND ABRAHAMSON, INC.

7/10/2015 9:16:48 AM C:\Users\gbranders\Documents\Revit Local Files\P15_3595001100_UlineConferenceCenter_gbranders-PC7815.rvt

KEYNOTES: 1

1. RUN VERTICAL VENTS SERVED BY RETURN VENT TO HIGHEST ELEVATION WITHIN BUILDING AND CONNECT TO RETURN VENT

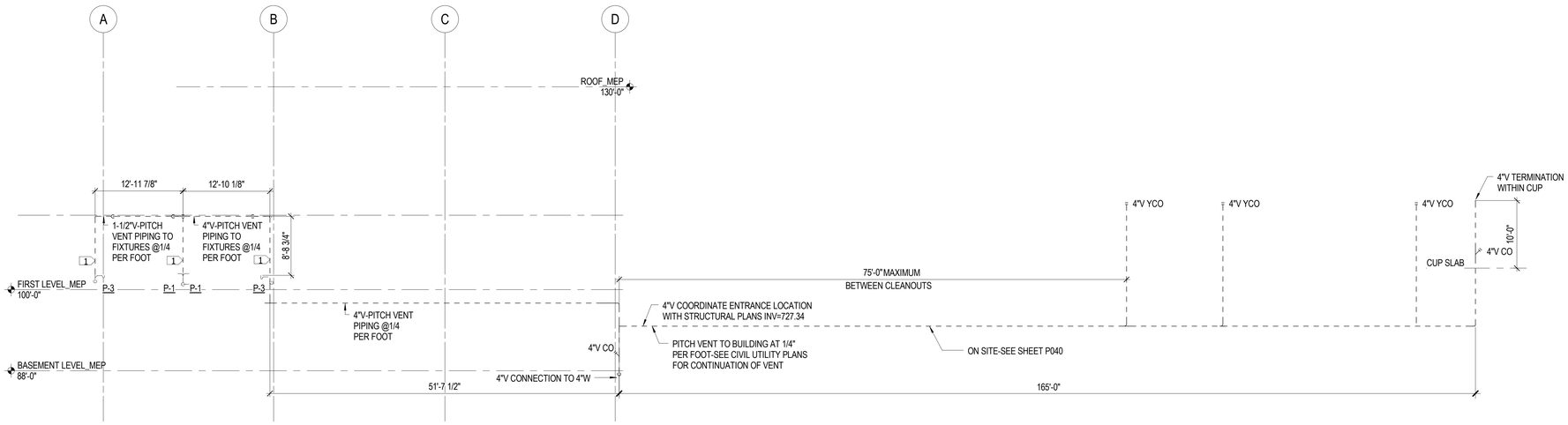

2 Return Vent Schematic
1/8" = 1'-0"

333 East Erie Street
Milwaukee, Wisconsin 53202
Telephone 414.278.8200

ULINE
12575 Uline Drive
Pleasant Prairie, WI 53158

ULINE
SHIPPING SUPPLY SPECIALISTS

NO	DESCRIPTION	DATE
	CP-2	07/10/15

ISSUANCE HISTORY - THIS SHEET

HGA NO: 3595-001-00

PLUMBING DETAILS

DATE: May 8, 2015

CONSTRUCTION DOCUMENTS

P701

© COPYRIGHT HAMMEL, GREEN AND ABRAHAMSON, INC.

7/10/2015 9:16:49 AM C:\Users\gbrandens\Documents\Revit Local Files\P15_3595001100_UlineConferenceCenter_gbrandens-PC7615.rvt

PLUMBING FIXTURE AND CONNECTION SCHEDULE (F)								
FIXTURE NO.	FIXTURE TYPE	FIXTURE		NOTE NUMBER	WASTE	VENT	CW	HW
	ELECTRIC WATER COOLER	FIXTURE: CHILLER: ACCESSORIES:	ELKAY NO. EZSTL8SC WALL-MOUNTED, DUO-HEIGHT, UNIT SHALL DELIVER 8.0 GPH OF 50 DEG F AMBIENT AND 80 DEG F INLET WATER, 3/8" IPS WATER INLET ELKAY NO. ER2 REMOTE TYPE WATER CHILLER UNIT, 2.5 GPH OF 50 DEG F WATER CAPACITY, 1/20 HP COMPRESSOR, DO NOT EXCEED 15 FEET FROM FOUNTAIN. ELKAY NO. EWF-172 FILTER, ELKAY LK-35	1	1-1/4"	1-1/2"	1/2"	-
P-1	WATER CLOSET ADA	FIXTURE: VALVE: SEAT: ACCESSORIES:	KOHLER "KINGSTON" K-4325-0 WALL-MOUNTED WATER CLOSET, VITREOUS CHINA, ELONGATED BOWL, 1-1/2" TOP SPUD, SIPHON JET, 1.6 GPF. SLOAN ROYAL 111 -1.6 EXPOSED WATER CLOSET FLUSHOMETER, 11-1/2" HIGH VALVE, 1.6 GPF, CHROME PLATED, SCREW CAST WALL FLANCE, SWEAT SOLDER ADAPTER KIT, ADA HANDLE, VANDAL RESISTANT STOP COP, DUAL FILTER BYPASS,VALVE HANDLE TO BE MOUNTED ON APPROACH SIDE OF WATER CLOSET BEMIS 2155SSCT WHITE SEAT WALL MOUNTED FIXTURE CARRIER	1	4"	2"	1 1/2"	-
P-2	URINAL ADA	FIXTURE: VALVE: ACCESSORIES:	KOHLER "BARDON" K-4904-ET-0 WALL-MOUNTED URINAL, VITREOUS CHINA, 3/4" TOP SPUD, SIPHON JET, 1.0 GPF. SLOAN OPTIMA 186 SMO EXPOSED, BATTERY POWERED, SIDE MOUNT SENSOR OPERATED URINAL FLUSHOMETER, 1-1/2" HIGH VALVE, 1.0 GPF, CHROME PLATED WALL MOUNTED FIXTURE CARRIER	1	2"	1-1/2"	3/4"	-
P-3	LAVATORY ADA	FIXTURE: FAUCET: STRAINER: ACCESSORIES:	KOHLER "CAXTON" K-2209 UNDERMOUNT COUNTERTOP SINK, NO FAUCET HOLES, OVERFLOW DRAIN, VITREOUS CHINA. KOHLER 15592-P CORALAIS FAUCET, SINKGLE LEVER HANDLE, 1.5 GPM, GROUND JOINTS, 4-1/2" LEVER HANDLE OPEN GRID STRAINER WITH CHROME PLATED TAILPIECE. TRUEBRO "LAV GUARD" MOLDED COVERING FOR WATER AND WASTE PIPING.	1	1-1/2"	1-1/2"	1/2"	1/2"
P-5	SERVICE SINK	FIXTURE: FAUCET: STRAINER ACCESSORIES:	CRANE PLUMBING/FIAT PRODUCTS MSB 3624 FLOOR SET MOP SERVICE BASIN, MOLDED STONE, 36"x 24"x10" HIGH. CHICAGO FAUCETS 897-SJKCP WALL-MOUNTED SERVICE SINK FAUCET, VACUUM BREAKER SPOUT, INTEGRAL STOPS, INDEXED LEVER HANDLES, HOSE THREAD OUTLET, PAIL HOOK, CHROME PLATED. REMOVABLE STAINLESS STEEL COMBINATION DOME STRAINER AND LINT BASKET. CRANE PLUMBING/FIAT PRODUCTS MSG 3624 STAINLESS STEEL WALL GUARD, 889-CC MOP BRACKET, 832-AA 30" HOSE & MOUNTING BRACKET, E-88-AA STAINLESS STEEL BUMPER GUARD.	-	3"	1-1/2"	3/4"	3/4"
P-6	SINK	FIXTURE: FAUCET: STRAINER:	ELKAY LRAD3321 KOHLER CORALAIS K-15171-P-CP SINGLE OR THREE HOLE KITCHEN SINK FAUCET, SINGLE LEVER HANDLE, 8-1/2" RIGID SPOUT, 2.2 GPM, CHROME PLATED. KOHLER K-8813 DRAIN OUTLET FITTING WITH 3-1/2" PERFORATED GRID STRAINER AND 1-1/2" CHROME PLATED TAILPIECE.	-	1-1/2"	1-1/2"	1/2"	1/2"
P-8	WALL HYDRANT	FIXTURE:	WOODFORD B67 FREEZE LESS WALL HYDRANT, AUTOMATIC DRAINING, DOUBLE CHECK BACKFLOW PREVENTER, LOOSE KEY OPERATION, ENCLOSED IN FLUSH-MOUNTED WALL BOX WITH CHROME FINISH.	1	-	-	3/4"	-

FLOOR DRAIN SCHEDULE (FD)												
	FLOOR DRAIN BODY			STRAINER				TRAP MATERIAL	BWV	BASIS OF DESIGN		REMARKS
UNIT TAG	MATERIAL	SHAPE	OUTLET	SIZE	MATERIAL	FINISH	SQ. IN. OPENING			MANUFACTURER	MODEL NO.	
FD-A	CAST IRON	ROUND	BOTTOM	6"	NICKEL-BRONZE	POLISH			NO	ZURN	ZN-415B	
FD-B	CAST IRON	ROUND	BOTTOM	8"	BRONZE	POLISH			NO	ZURN	ZB-415B	

GAS WATER HEATER SCHEDULE (GWH)													
			WATER		GAS						BASIS OF DESIGN		
Type Comments	UNIT TAG	LOCATION	ENTERING TEMPERATURE (°F)	LEAVING TEMPERATURE (°F)	INPUT (MBH)	PRESS. (W.G.)	EFFICENCY (%)	RECOVERY (GPH)	TANK CAPACITY (GALLONS)	VENT DIA.	INTAKE DIA.	MANUFACTURER	MODEL NO.	REMARKS
GWH	GWH-1	MECHANICAL ROOM	40	120	120	9"	95	138	60.0	4		AO SMITH	BTH-120	
GWH	GWH-2	MECHANICAL ROOM	40	120	120	9"	95	138	60.0	4		AO SMITH	BTH-120	

SUMP PUMP SCHEDULE (SP)											
						MOTOR					
UNIT TAG	LOCATION	SERVING	SYSTEM TYPE	FLOW EACH PUMP(GPM)	HEAD (FT)	QTY.	HP	RPM	MANUFACTURER	MODEL NO.	REMARKS
SP-1	ELEVATOR	ELEVATOR	RW	30 GPM	12	1	0.5	1750	WEIL	1413-500	
SP-2	MECHANICAL ROOM	AREA WELLS	RW	7 GPM	12	1	0.33	1750	WEIL	1408-525	24"X36" SUMP

SEWAGE EJECTOR SCHEDULE (SE)												
					PUMP MOTOR			BASIN		BASIS OF DESIGN		ELECTRICAL
UNIT TAG	LOCATION	SERVING	TOTAL FLOW (GPM)	HEAD (FT)	QUAN.	HP	RPM	DIA. (IN)	DEPTH (IN)	MANUFACTURER	MODEL NO.	EMERGENCY POWER
SE-1	MECHANICAL ROOM	SANITARY	61	12	2	1.5	1750	42	54	WEIL	2526-694	Yes

ELECTRIC WATER COOLER SCHEDULE (EWC)													
					CAPACITY						BASIS OF DESIGN		
					WATER			AMBIENT AIR TEMP (°F)	MOUNTING TYPE	SPOUT MOUNTING HEIGHT IN INCHES	SUPPLY CONNECTION (INCHES)	WASTE OUTLET (INCHES)			
UNIT TAG	LEVELS	CABINET	FOUNTAIN BOWL MATERIAL TYPE	CONTROL	FLOW (GPH)	(EWT)	(LWT)						MANUFACTURER	MODEL NO.	REMARKS
EWC-1	2	EXPOSED	STAINLESS STEEL	THERMOSTAT	9.7	70	50	70	WALL	LOWER: 32-7/8"	3/8"	1-1/2"	ELKAY	EZSTL8SC	

PLUMBING PUMP SCHEDULE (PP)														
							DESIGN			PUMP CONNECTION			BASIS OF DESIGN		
UNIT TAG	QTY.	LOCATION	SYSTEM SERVED	SYSTEM TYPE	SYSTEM TEMPERATURE	PUMP TYPE	CAPACITY (GPM)	HEAD (FT HD)	HEAD AT 115% (FT)	SUCTION (IN)	DISCHARGE (IN)	EMERGENCY POWER	MANUFACTURER	MODEL NO.	REMARKS
PP-1	1	MECHANICAL ROOM	HOT WATER RECIRCULCULATION	DOMESTIC HOT WATER	120	CIRCULATOR	0.5	8	10	3/4	3/4	No	B&G	ECOCIRC 19-14 VARIO	ECM

CROSS CONTECTION DEVICE SCHEDULE(CCD)									
							BASIS OF DESIGN		
UNIT TAG	LOCATION	SYSTEM/EQUIP. SERVING	TYPE	SIZE	MATERIAL	LEAD FREE	MANUFACTURER	MODEL NO.	REMARKS
CCD-1	MECHANICAL ROOM	RO UNIT	RPZ	1/2"		Yes	WATTS	009	

THERMAL EXPANSION ABSORBER SCHEDULE (TEA)						
			TANK	BASIS OF DESIGN		
UNIT TAG	LOCATION	SYSTEM	MAXIMUM ACCEPT. VOLUME (GAL)	MANUFACTURER	MODEL NO.	REMARKS
TEA-1	MECHANICAL ROOM	DOMESTIC WATER	10	WESSEL	TXA-35	

HGA
333 East Erie Street
Milwaukee, Wisconsin 53202
Telephone 414.278.8200

ULINE
12575 Uline Drive
Pleasant Prairie, WI 53158

ULINE
SHIPPING SUPPLY SPECIALISTS

NO	DESCRIPTION	DATE
	CP-2	07/10/15

ISSUANCE HISTORY - THIS SHEET

HGA NO: 3595-001-00

PLUMBING SCHEDULES

DATE: May 8, 2015

CONSTRUCTION DOCUMENTS

P800

© COPYRIGHT HAMMEL, GREEN AND ABRAHAMSON, INC.

C:\Users\gbrandens\Documents\Revit Local Files\P15_3595001100_ULineConferenceCenter_gbrandens-PC7615.rvt
7/10/2015 9:16:53 AM

SYMBOL EXPLANATION

OR $$$	EXCEPT WHEN NOTED OTHERWISE ON DRAWINGS OR SPECIFICATIONS, DEVICES SHOWN IN THIS MANNER INDICATE THE GANGING TOGETHER OF THE DEVICES UNDER COMMON COVER PLATE.
A 23 b	1 UPPER CASE LETTER INDICATES LIGHT FIXTURE TYPE. 2 NUMBER INDICATES CIRCUIT CONNECTION. (REFER TO THE LIGHT FIXTURE SCHEDULE) 3. LOWER CASE LETTER INDICATES CONTROL DEVICE.
OR	ARROWS CONNECTED TO A DEVICE INDICATE AIMING DIRECTION. ARROWS NEAR ALL EXIT SIGNS IDENTIFY DIRECTION OF ARROW ON FACE PLATE. SHADED PORTION OF EXIT SIGN INDICATES FACE(S) TO BE ILLUMINATED.
L6-30	SPECIAL RECEPTACLES. THE NEMA STANDARD TYPE IS SHOWN WITH AN UPPER CASE LETTER. TYPE AS NOTED. EXAMPLE: NEMA L6-30R, 250V, SINGLE PHASE, 30A, TWIST-LOCK RECEPTACLE
PTR 2	THE CIRCUIT DESIGNATION IS SHOWN BY NUMBER ADJACENT TO EQUIPMENT. ABBREVIATION NEXT TO CIRCUIT NUMBER INDICATES A DEDICATED CIRCUIT FOR THAT TYPE OF EQUIPMENT. EXAMPLE: WALL MOUNTED DUPLEX RECEPTACLE ON DEDICATED CIRCUIT NUMBER 2 FOR A PRINTER.
EF-1	SYMBOL WITH EQUIPMENT IDENTIFICATION. SEE MOTOR AND EQUIPMENT SCHEDULE FOR COMPLETE ELECTRICAL INFORMATION. EXAMPLE: EXHAUST FAN #1
	LIGHT FIXTURE OR DEVICE SHOW WITH STEM ARE TO BE WALL MOUNTED.
1	PLAN KEY NOTE. SEE KEYE NOTE SCHEDULE ON THAT DRAWING. ARROW POINTS TO THE ITEM TO WHICH THE NOTE APPLIES.

ELECTRICAL ABBREVIATIONS

ABBR..	DESCRIPTION	ABBR..	DESCRIPTION	ABBR..	DESCRIPTION
A,AMP	AMPERE	HP	HORSEPOWER	P	POLE
AFF	ABOVE FINISH FLOOR	HORZ	HORIZONTAL ORIENTATION	PF	POWER FACTOR
AIC	AMPERE INTERRUPTING CAPACITY			PH	PHASE
ATS	AUTOMATIC TRANSFER SWITCH	IPC	INTEGRATED POWER CENTER	PRI	PRIMARY
		IG	ISOLATED GROUND	PTR	PRINTER
B	BLANK			PVC	POLYVINYL CHLORIDE
BLDG	BUILDING	KV	KILOVOLT		
		KVA	KILOVOLT-AMPERE	RCPT	RECEPTACLE
C	CONDUIT	KW	KILOWATT	REF	REFRIGERATOR
CCTV	CLOSED CIRCUIT TELEVISION				
COFF	COFFEE MAKER	LV	LOW VOLTAGE	SEC	SECONDARY
CU	COPPER	LCP	LIGHTING CONTROL PANEL		
CLG	CEILING			TYP	TYPICAL
		MCA	MINIMUM CIRCUIT AMPACITY		
DED	DEDICATED	MIN	MINIMUM	UH	UNIT HEATER
DW	DISH WASHER	MCB	MAIN CIRCUIT BREAKER		
		MLO	MAIN LUGS ONLY	V	VOLT
ELEC	ELECTRIC, ELECTRICAL	MTD	MOUNTED	VA	VOLT AMPERES
EMT	ELECTRICAL METALLIC TUBING	MW	MICROWAVE	VFD	VARIABLE FREQUENCY DRIVE
EX,EXST	EXISTING				
EWC	ELECTRIC WATER COOLER	NEC	NATIONAL ELECTRICAL CODE	W	WATT
		NEMA	NATIONAL ELECTRICAL MANUFACTURER'S ASSOCIATION	WP	WEATHERPROOF
FA	FIRE ALARM				
FLA	FULL LOAD AMPERE	NTS	NOT TO SCALE	XFMR	TRANSFORMER
FP	FURNITURE POWER				
FT	FURNITURE TELECOMMUNICATIONS	OCPD	OVER CURRENT PROTECTIVE DEVICE		
FTL	FEED THRU LUGS				
GD	GARBAGE DISPOSAL				
GFI/GFCI	GROUND FAULT CIRCUIT INTERRUPTER				
GND/G	GROUND				

GENERAL NOTES

A. ELECTRICAL ORDINANCES:
ALL ELECTRICAL WORK SHALL BE INSTALLED IN ACCORDANCE WITH THE REQUIREMENTS OF THE LATEST EDITION OF THE NATIONAL ELECTRICAL CODE AND FEDERAL LAWS OR ORDINANCES GOVERNING THE PROJECT. IF, IN ANY INSTANCE, THE PLANS AND SPECIFICATIONS ARE IN DIRECT CONFLICT WITH SUCH CODES, LAWS OR ORDINANCES, THE CODE, LAWS AND ORDINANCES SHALL HAVE JURISDICTION AND THE WORK IN QUESTION SHALL BE INSTALLED ACCORDING TO THE CODES, LAWS AND ORDINANCES. ALL WORK SHALL BE INSTALLED UNDER THE SUPERVISION OF A LICENSED MASTER ELECTRICIAN.

B. BRING ALL DISCREPANCIES SHOWN ON DIFFERENT DRAWINGS AND BETWEEN DRAWINGS AND SPECIFICATIONS OR BETWEEN DOCUMENTS AND FIELD CONDITIONS TO THE IMMEDIATE ATTENTION OF THE ARCHITECT.

C. COORDINATE ELECTRICAL INSTALLATION WITH ALL OTHER CONTRACTORS AND OWNER FOR THE LOCATION AND SIZES OF ALL EQUIPMENT PRIOR TO ROUGH-IN. SHOULD ELECTRICAL WORK BE INSTALLED WHICH INTERFERES WITH THE WORK OF OTHER CONTRACTORS OR OWNER, SUCH WORK SHALL BE CHANGED WITH NO ADDITIONAL COST TO OWNER.

D. MOUNT EQUIPMENT AT NOMINAL MOUNTING HEIGHT INDICATED IN ELECTRICAL SYMBOL SCHEDULE UNLESS NOTED OTHERWISE ON THE FLOOR PLANS OR DETAILED IN ARCHITECTURAL ELEVATIONS. DIMENSION SHOWN IS TO CENTER LINE OF BOX. SEE ARCHITECTURAL INTERIOR AND EXTERIOR ELEVATIONS FOR EXACT LOCATION OF WALL MOUNTED DEVICES AND LIGHT FIXTURES.

E. ALL CONDUCTORS SHALL BE COPPER, UNLESS SPECIFIED OTHERWISE. BUILDING POWER WIRING SHALL HAVE THHN/THWN INSULATION. CONDUCTOR AMPACITY SHALL BE BASED ON TABLE 310-16 OF THE NEC. USE 60-DEGREE C RATING FOR CIRCUITS TERMINATING ON DEVICES RATED BELOW 100A. USE 75-DEGREE RATING FOR CIRCUITS TERMINATING ON DEVICES AND IN ENCLOSURES RATED 100A AND OVER.

F. INSTALL INSULATED GREEN EQUIPMENT GROUNDING CONDUCTOR WITH ALL BRANCH CIRCUIT AND FEEDER CONDUCTORS, SIZED IN ACCORDANCE WITH NEC ARTICLE 250.

G. DRAWINGS INDICATE DESIGN LOADS, VOLTAGES, CORRESPONDING CONTROL EQUIPMENT, FEEDERS AND OVER CURRENT DEVICES. IF EQUIPMENT ACTUALLY FURNISHED HAVE LOADS OTHER THAN THOSE INDICATED ON THE DRAWINGS OR SPECIFIED HEREIN, CONTROL EQUIPMENT, FEEDERS AND OVER CURRENT DEVICES SHALL BE ADJUSTED IN SIZE ACCORDINGLY AT NO ADDITIONAL COST TO THE OWNER. SUCH ADJUSTMENT SHALL BE SUBJECT TO THE REVIEW OF THE ARCHITECT PRIOR TO ACCEPTANCE OR PURCHASE.

H. IN GENERAL, BRANCH CIRCUIT CONDUIT AND WIRE IS NOT SHOWN. PROVIDE CONDUIT AND WIRE TO CONNECT DEVICES TO CIRCUITS SHOWN. WIRE FILL AND CONDUCTOR SIZE SHALL BE AS SPECIFIED. PROVIDE A MAXIMUM OF THREE PHASE CONDUCTORS IN A SINGLE HOME RUN. PROVIDE A DEDICATED NEUTRAL FOR EACH PHASE CONDUCTOR UNLESS OTHERWISE NOTED. INSTALL PULL BOXES AND JUNCTION BOXES AS REQUIRED TO AID IN THE INSTALLATION OF CABLES AND CONDUCTORS. LABEL LOCATION OF POWER CIRCUITS ON COVER OF ALL RECEPTACLES AND ON COVER OF JUNCTION BOXES AND BOXES ASSOCIATED WITH EQUIPMENT. INCLUDE PANEL AND CIRCUIT IDENTIFICATION. LABEL LOCATION OF POWER CIRCUITS ON COVER OF ALL LIGHT SWITCHES. INCLUDE PANEL AND CIRCUIT IDENTIFICATION.

I. PROVIDE MINIMUM #12 AWG CONDUCTORS FOR HOMERUNS, #10 AWG CONDUCTORS FOR HOMERUNS THAT EXCEED 100 FEET FOR 120 VOLT CIRCUITS AND 250 FEET FOR 277 VOLT CIRCUITS. HOMERUNS SHALL BE CONSIDERED TO ORIGINATE FROM THE POWER SOURCE TO THE FIRST PIECE OF EQUIPMENT OR DEVICE.

J. SEE ARCHITECTURAL REFLECTED CEILING PLANS FOR FINAL LOCATION OF CEILING MOUNTED EQUIPMENT. MOUNT RECESSED CEILING FIXTURES WITH FLEXIBLE METAL CONDUIT OF LENGTH REQUIRED TO MEET MOUNTING LOCATION AND NEC REQUIREMENTS. MAXIMUM FLEXIBLE CONDUIT LENGTH SHALL BE (6') SIX FEET.

K. THREE AND FOUR LAMP FLUORESCENT LUMINARIES ARE TO BE BI-LEVEL SWITCHED WITH OUTBOARD LAMPS CONNECTED TO SWITCH "A" AND INBOARD LAMPS CONNECTED TO SWITCH "B", TYPICAL UNLESS NOTED OTHERWISE. PROVIDE BALLASTS TO ACCOMMODATE SWITCHING. ROOMS WITH ONLY ONE LUMINAIRE TYPE ARE NOT NOTED WITH SWITCH ATTRIBUTES AND SHALL UTILIZE SWITCHING OF 'A' AND 'B' INDICATED ABOVE UNLESS OTHERWISE NOTED.

L. THE ELECTRICAL CONTRACTOR SHALL INSTALL ALL ITEMS NECESSARY TO COMPLETE THE INSTALLATION. THIS CONTRACTOR SHALL TOUCH-UP OR REFINISH THE FACTORY FINISH OF EQUIPMENT MARRED DURING SHIPMENT, DEMOLITION OR INSTALLATION.

M. ELECTRICAL WORK SHALL NOT INTERFERE WITH CLEARANCES REQUIRED FOR GENERAL AND MECHANICAL CONSTRUCTION.

N. ELECTRICAL CONTRACTOR SHALL SUBMIT SHOP DRAWINGS OF ALL NEW EQUIPMENT, DEVICES, FIXTURES AND CABLES/CONDUCTORS TO BE INSTALLED IN SYSTEM FOR WRITTEN APPROVAL FROM ENGINEER PRIOR TO INSTALLATION. REFER TO SPECIFICATIONS FOR ADDITIONAL SUBMITTAL REQUIREMENTS.

O. ALL WORK SHALL BE GUARANTEED FREE FROM DEFECTS FOR A PERIOD OF ONE YEAR FROM DATE OF FINAL ACCEPTANCE.

P. TELECOMMUNICATIONS AND AV SYSTEMS ARE OWNER FURNISHED. PROVIDE ROUGH-INS AND RACEWAYS WHERE DEVICES ARE SHOWN ON PLANS. COORDINATE BACK BOX SIZE AND FINAL LOCATIONS WITH OWNER FURNISHED VENDOR DRAWINGS.

ELECTRICAL SYMBOLS

SYMBOL	DESCRIPTION	NOMINAL MOUNTING HEIGHT
	LIGHTING	
	RECESSED MOUNTED LIGHT FIXTURES	**
	SURFACE MOUNTED LIGHT FIXTURES	**
	SUSPENDED MOUNTED LIGHT FIXTURES	**
	RECESSED LIGHT FIXTURES ON EMERGENCY POWER CIRCUIT	**
	SURFACE MOUNTED LIGHT FIXTURES ON EMERGENCY POWER CIRCUIT	**
	RECESSED LIGHT FIXTURES ON STANDBY (S) POWER CIRCUIT	**
	SURFACE MOUNTED LIGHT FIXTURES ON STANDBY (S) POWER CIRCUIT	**
	RECESSED INDIRECT LIGHT FIXTURE (ORIENTATION OF BASKET INDICATED BY LINE IN CENTER OF FIXTURE)	**
	EXIT LIGHT	**
	LIGHT TRACK	**
	POLE MOUNTED LIGHT FIXTURE	**
	WALL MOUNTED LIGHT FIXTURE	**
	ARROW OF LIGHT FIXTURE INDICATES AIMING DIRECTION	**
	POST TOP LIGHT FIXTURE	**
	EMERGENCY BATTERY PACK	**
	SWITCHES	
$	SINGLE POLE SWITCH	46""
$ 2	2 POLE SWITCH	46""
$ 3	3 WAY SWITCH	46""
$ 4	4 WAY SWITCH	46""
$ L	LOW VOLTAGE SWITCH	46""
$ D	DIMMER SWITCH	46""
$ E	EMERGENCY SWITCH	46""
$ F	FAN SWITCH	46""
$ K	KEY OPERATED SWITCH	46""
$ M	MOMENTARY CONTACT SWITCH	46""
$ WP	WEATHERPROOF SWITCH	46""
$ P	SWITCH WITH PILOT LIGHT	46""
$ T	MOTOR SWITCH	46""
	DIGITAL TIME SWITCH	46""
	OCCUPANCY SENSOR	**
	VACANCY SENSOR (MANUAL ON OCCUPANCY)	**
	PHOTO SENSOR	**
	EMERGENCY LIGHTING TRANSFER DEVICE	
	POWER	
	SINGLE RECEPTACLE	18"
	DUPLEX 125V RECEPTACLE	18"
	EMERGENCY DUPLEX 125V RECEPTACLE	18"
	GFCI PROTECTED DUPLEX 125V RECEPTACLE	18"
IG	ISOLATED GROUND DUPLEX 125V RECEPTACLE	18"
IG	EMERGENCY ISOLATED GROUND DUPLEX 125V RECEPTACLE	18"
	DUPLEX W/ USB COMBO	18"
IG	ISOLATED GROUND DUPLEX W/ USB COMBO	18"
	EMERGENCY DUPLEX W/ USB COMBO	18"
IG	EMERGENCY ISOLATED GROUND DUPLEX W/ USB COMBO	18"
	DOUBLE DUPLEX 125V RECEPTACLE	18"
	GFCI PROTECTED DOUBLE DUPLEX 125V RECEPTACLE	18"
IG	ISOLATED GROUND DOUBLE DUPLEX 125V RECEPTACLE	18"
IG	EMERGENCY ISOLATED GROUND DOUBLE DUPLEX 125V RECEPTACLE	18"
L5-20	SPECIAL PURPOSE RECEPTACLE. LABEL INDICATES RECEPTACLE TYPE.	**
	SWITCHED OR SPLIT WIRED RECEPTACLE	**
	JUNCTION BOX	
	FLOOR BOX CAST-IN-PLACE	
	FLOOR BOX POKE THROUGH	
	PEDESTAL DUPLEX 125V RECEPTACLE SERVICE FITTING	
	CEILING MOUNTED DUPLEX 125V RECEPTACLE	

** SEE DRAWING, SPECIFICATION OR LIGHTING FIXTURE SCHEDULE FOR MOUNTING HEIGHT

SYMBOL	DESCRIPTION	NOMINAL MOUNTING HEIGHT
	POWER DISTRIBUTION	
	MOTOR	**
	SAFETY DISCONNECT SWITCH	**
	FUSED STARTER	**
	COMBINATION STARTER	**
VSD	VARIABLE SPEED DRIVE	**
T	DRY TYPE TRANSFORMER-FLOOR MOUNT	**
T	DRY TYPE TRANSFORMER - CEILING/WALL MOUNT	**
	POWER OR DISTRIBUTION PANEL	**
	SURFACE MTD PANELBOARD	**
	FLUSH MTD PANELBOARD	**
	GROUND BUS BAR	
	COMMUNICATION	
	VOICE OUTLET	18"
W	WALL PHONE VOICE OUTLET	54"
	DATA OUTLET	18"
WA	WIRELESS LAN OUTLET	CLG
	VOICE/DATA OUTLET	18"
	TV OUTLET	**
	INTERCOM	**
	J-HOOK	**
	MICROPHONE JACK	**
	AUXILIARY OUTLET	**
	PROJECTOR OUTLET	**
	REMOTE CONTROL	**
	CLOCK	**
CH	CHIME	**
CH	CHIME LIGHT	**
	SPEAKER	**
	EFFECTS SPEAKER OUTLET	**
	VOLUME CONTROL	**
	PUSHBUTTON	**

SYMBOL	DESCRIPTION	NOMINAL MOUNTING HEIGHT
	FIRE ALARM	
S	SMOKE DETECTOR	**
S	DUCT SMOKE DETECTOR	**
FS	SPRINKLER FLOW SWITCH	**
TS	TAMPER SWITCH	**
DA	DAMPER OPERATOR W/MONITOR MODULE	**
F	FIRE ALARM MANUAL STATION	46""
F	FIRE ALARM AUDIO-VISUAL UNIT	CLG MTD OR 80"
F	FIRE ALARM VISUAL UNIT	CLG MTD OR 80"
F	FIRE ALARM AUDIO UNIT	CLG MTD OR 80"
	FIRE ALARM PHONE JACK	46""
H	HEAT DETECTOR	**
S	BEAM DETECTOR RECEIVER	**
S	BEAM DETECTOR TRANSMITTER	**
MM	ADDRESSABLE MONITOR	**
CM	ADDRESSABLE CONTROL MONITOR	**
	CONDUIT AND WIRING	
	CONDUIT CONCEALED IN WALL OR OVERHEAD	**
	CONDUIT CONCEALED IN OR BELOW FLOOR	**
	CONDUIT INSTALLED EXPOSED	**
	CONDUIT VERTICAL TRANSITION	**
	CONDUIT STUBBED OUT	**
	CONDUIT SEAL	**
EX	EXISTING CONDUIT	**
EX	EXISTING CONDUIT INTERCEPTED	**
T	UNDERGROUND TELEPHONE	**
L	LOW VOLTAGE CABLE	**
	INDIVIDUAL BRANCH CIRCUIT HOMERUN	**
	SINGLE CHANNEL WIREMOLD	
	DUAL CHANNEL WIREMOLD	
—PS—	PLUG STRIP	

ELECTRICAL EQUIPMENT IDENTIFICATION

1 - ELECTRICAL SERVICE BRANCH

(N)	NORMAL
(E)	EMERGENCY
(LR)	LEGALLY REQUIRED
(SB)	STANDBY

1 - ELECTRICAL SERVICE BRANCH HEALTHCARE

(N)	NORMAL
(E)	EMERGENCY
(LS)	LIFE SAFETY
(CR)	CRITICAL
(EQ)	EQUIPMENT
(OP)	OPTIONAL

2 - EQUIPMENT TYPE

(SWG)	SWITCHGEAR
(SWB)	SWITCHBOARD
(DHP)	DISTRIBUTION 46"0/277V PANEL
(DLP)	DISTRIBUTION 208/120V PANEL
(HP)	46"0/277V PANEL
(LP)	208/120V PANEL
(M)	METER
(ATS)	AUTOMATIC TRANSFER SWITCH
(DS)	DISCONNECT SWITCH
(LCP)	LIGHTING CONTROL PANEL

3 - LEVEL

(LL)	LOWER LEVEL
(1)	FIRST LEVEL
(2)	SECOND LEVEL
(3)	THIRD LEVEL
(4)	FOURTH LEVEL
(5)	FIFTH LEVEL
(6)	SIXTH LEVEL
(7)	SEVENTH LEVEL
(PH)	PENTHOUSE LEVEL

4 - NUMERICAL SEQUENCE ON SPECIFIED FLOOR

(1 - 6) PANELS IN RISER ROOMS 1 THROUGH 6
(7-12) ON GROUND LEVEL THROUGH SIXTH LEVEL PANELS IN STACKED ROOMS 7 THROUGH 12 ON GROUND LEVEL AND FIRST LEVEL

**EXAMPLE

1 2 3 4
E L 2 - 1
(EMERGENCY, 46"0/277V PANEL, SECOND LEVEL, PANEL #1)

TRANSFORMER IDENTIFICATION LEGEND

"T-(PANEL TRANSFORMER SERVES)"

**EXAMPLE

1 2 3 4
T-LP 2 - 1
(TRANSFORMER, 208/120V PANEL, SECOND LEVEL, PANEL #1)

MISCELLANEOUS

- EQUIPMENT AS NOTED
- KEYNOTE
- DASHED SYMBOL INDICATES EXISTING DEVICES TO BE REMOVED.

ELECTRICAL SHEET INDEX

E000	COVER SHEET
E010	ELECTRICAL ONE LINE DIAGRAM
E030	ELECTRICAL SITE PLAN
E200	BASEMENT LEVEL LIGHTING PLAN OVERALL
E201	FIRST LEVEL LIGHTING PLAN OVERALL
E202	SECOND LEVEL LIGHTING PLAN OVERALL
E300	BASEMENT LEVEL POWER PLAN OVERALL
E301	FIRST LEVEL POWER PLAN OVERALL
E350	CUP ELECTRICAL PLAN
E400	BASEMENT LEVEL SYSTEMS PLAN OVERALL
E401	FIRST LEVEL SYSTEMS PLAN OVERALL
E500	ELECTRICAL SCHEDULE
E501	ELECTRICAL SCHEDULES
E530	LIGHTING CONTROL PANEL SCHEDULES
E601	ELECTRICAL DETAILS

HGA.
333 East Erie Street
Milwaukee, Wisconsin 53202
Telephone 414.278.8200

ULINE
12575 Uline Drive
Pleasant Prairie, WI 53158

ULINE
SHIPPING SUPPLY SPECIALISTS

I HEREBY CERTIFY THAT THIS PLAN, SPECIFICATION OR REPORT WAS PREPARED BY ME OR UNDER MY DIRECT SUPERVISION AND THAT I AM A DULY LICENSED PROFESSIONAL ENGINEER UNDER THE LAWS OF THE STATE OF

NAME:
DATE: JULY 10, 2015
REGISTRATION NUMBER:

NO	DESCRIPTION	DATE
	CP-2	07/10/15

ISSUANCE HISTORY - THIS SHEET

HGA NO: 3595-001-00

COVER SHEET

DATE: May 8, 2015

CONSTRUCTION DOCUMENTS

E000

© COPYRIGHT HAMMEL, GREEN AND ABRAHAMSON, INC.

C:\Users\gjoshuar\Documents\Revit Local Files\E15-Uline Electrical-359500100_gjoshuar.rvt
7/10/2015 8:11:50 AM

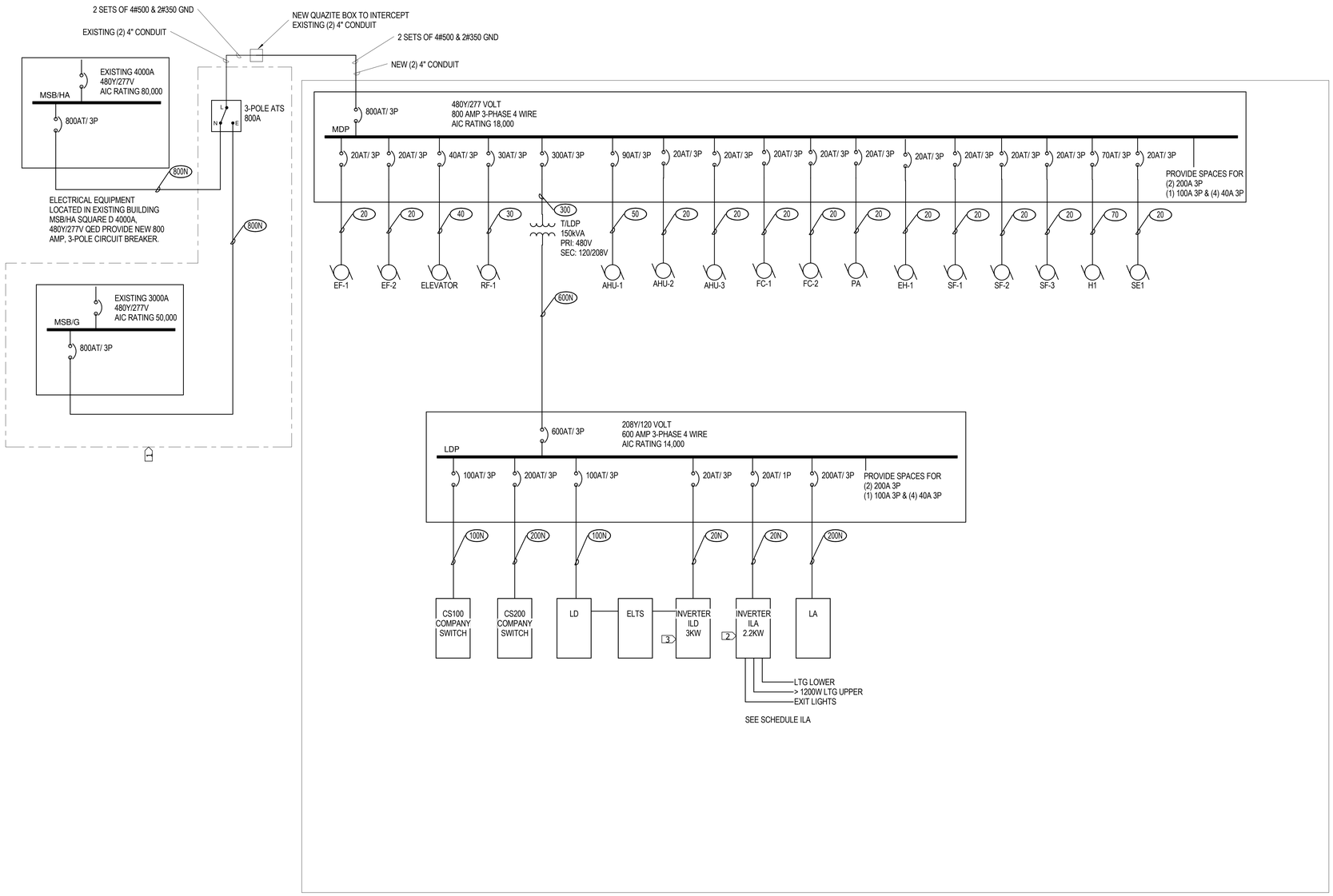

NEW ELECTRICAL EQUIPMENT
LOCATED IN THE PROPOSED
CONFERENCE CENTER BUILDING

1 RISER DIAGRAM

12" = 1'-0"

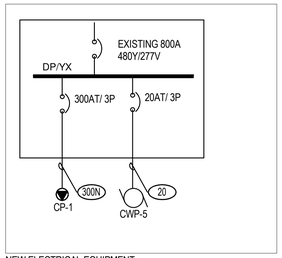

NEW ELECTRICAL EQUIPMENT
LOCATED IN THE CUP

GENERAL NOTES:

A. REFER TO THE MECHANICAL ELECTRICAL COORDINATION SCHEDULE FOR CONDUIT AND CONDUCTOR SIZES TO MECHANICAL EQUIPMENT AND MOTORS.

B. REFER TO THE MECHANICAL DRAWINGS AND COORDINATE WITH DIVISION 23 FOR EXACT LOCATIONS OF MECHANICAL EQUIPMENT.

C. REFER TO FEEDER SCHEDULE FOR WIRE AND CONDUIT SIZES AS WELL AS FEEDER REQUIREMENTS.

D. REFER TO PANEL SCHEDULES FOR RATINGS AND ADDITIONAL REQUIREMENTS OF PANELBOARDS AND DISTRIBUTION BOARDS.

E. ELECTRICAL FEEDERS AND EQUIPMENT SHOWN WITH LIGHT LINES ARE EXISTING TO REMAIN. ALL ELECTRICAL EQUIPMENT SHOWN WITH DARK DASHED LINES ARE EXISTING TO BE DISCONNECTED AND REMOVED.

KEYNOTES: 1

1. EMERGENCY FEED WITH 800A CIRCUIT BREAKER AND 800A TRANSFER (ATS) SWITCH IS AN ADD ALTERNATE BID.

2. ISOLATION INVERTER E3MAC-2200-1P-1A-OA-C8.

3. ISOLATION INVERTER E3MAC-3000-3P-IC-OF-S1-MB.

FEEDER (AMPS)	FEEDER AND CONDUIT SIZES - CU	
	CONDUIT	CONDUCTOR
20	3/4"	3#12 & 1 #12 GND
30	3/4"	3#10 & 1 #10 GND
30N	3/4"	4#10 & 1 #10 GND
30S	3/4"	2#10 & 1 #10 GND
40	1"	3#8 & 1#10 GND
50	1"	3#6 & 1#10 GND
100N	2"	4#1 & 1#8 GND
175	2"	3#2/0 & 1#6 GND
200N	2 1/2"	4#3/0 & 1#6 GND
300N	3"	4#350 & (1)#4 GND
300	3"	3#350 & (1)#4 GND
600N	(2) 3"	4#350 & 1#1 GND
800N	(3) 3"	4#300 & 1#1/0 GND

NOTES:
* VOLTAGE DROP CONSIDERATIONS NOT TAKEN INTO CONSIDERATION IN TABLE.

100= 3 WIRES
100N= 4 WIRES
100K= 200% NEUTRAL
100I= ISOLATED GROUND

hga
333 East Erie Street
Milwaukee, Wisconsin 53202
Telephone 414.278.8200

ULINE
12575 Uline Drive
Pleasant Prairie, WI 53158

ULINE
SHIPPING SUPPLY SPECIALISTS

I HEREBY CERTIFY THAT THIS PLAN, SPECIFICATION OR REPORT WAS PREPARED BY ME OR UNDER MY DIRECT SUPERVISION AND THAT I AM A DULY LICENSED PROFESSIONAL ENGINEER UNDER THE LAWS OF THE STATE OF

NAME:
DATE: JULY 10, 2015
REGISTRATION NUMBER:

NO	DESCRIPTION	DATE
	CP-2	07/10/15

ISSUANCE HISTORY - THIS SHEET

HGA NO: 3595-001-00

ELECTRICAL ONE LINE DIAGRAM

DATE: May 8, 2015

CONSTRUCTION DOCUMENTS

E010

© COPYRIGHT HAMMEL, GREEN AND ABRAHAMSON, INC.

7/10/2015 9:11:52 AM C:\Users\jfischer\Documents\Revit Local Files\E15-Uline Electrical-359500100_jfischer.rvt

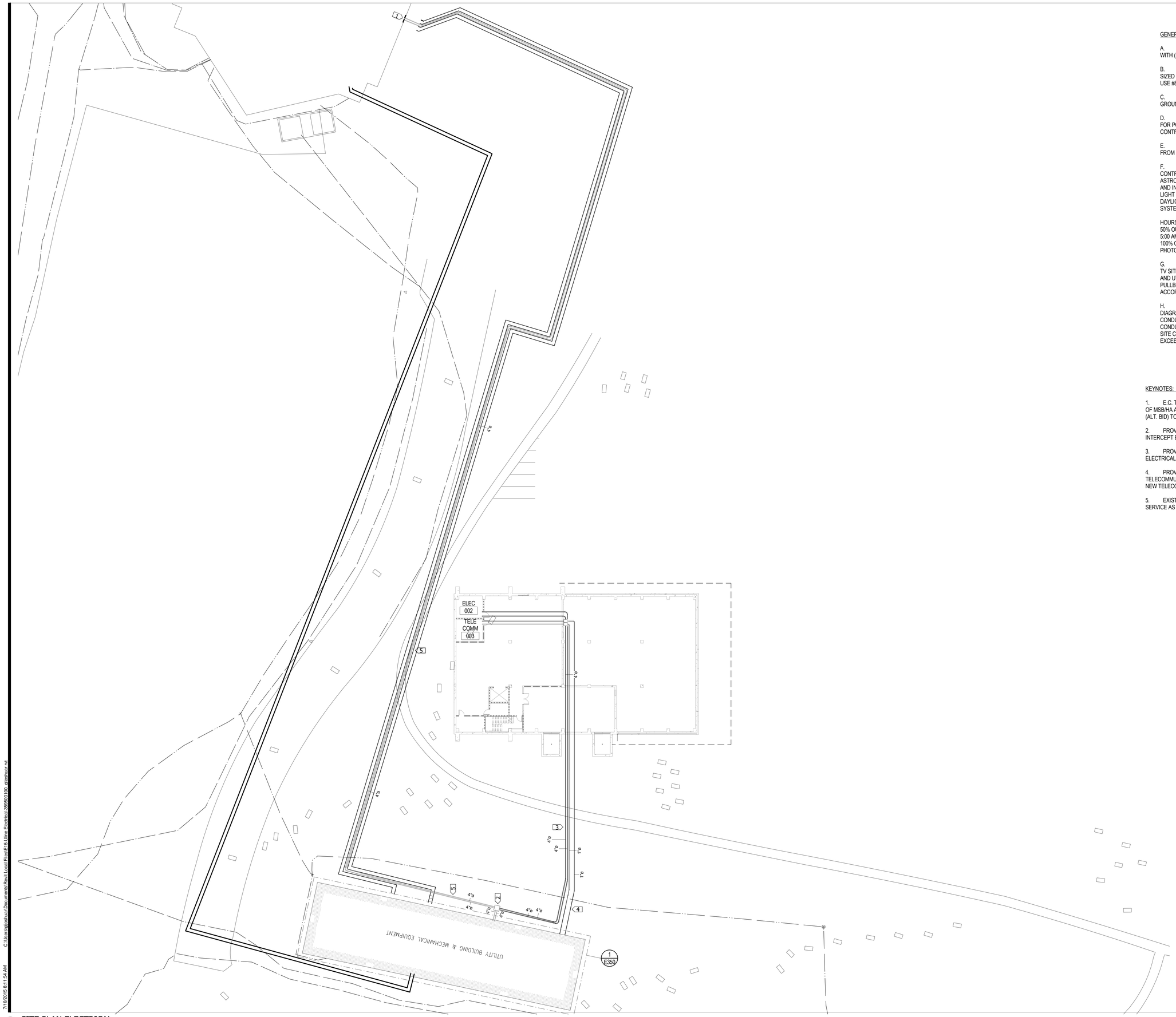

1 SITE PLAN ELECTRICAL
1" = 20'-0"

GENERAL NOTES:

A. SITE UTILITY SCOPE TO BE COORDINATED WITH (INSERT LOCAL UTILITY).

B. BRANCH CIRCUIT HOMERUNS SHALL BE SIZED TO LIMIT VOLTAGE DROP TO 3% MAXIMUM. USE #8 IN 1" PVC CONDUIT MINIMUM.

C. REFER TO GROUNDING PLAN FOR GROUNDING REQUIREMENTS.

D. REFER TO ELECTRICAL DETAILS SHEETS FOR POLE BASE INFORMATION, LIGHTING CONTROL DIAGRAMS, AND ZONE SCHEDULES.

E. LIGHT POLES SHALL BE A MINIMUM OF 2' FROM CURBS AND SIDEWALK EDGES.

F. ALL EXTERIOR LIGHTING SHALL BE CONTROLLED BY PHOTOCELL AND/OR ASTRONOMICAL TIMECLOCK THROUGH RELAY AND INTERFACED WITH BAS SYSTEM. EXTERIOR LIGHT SHALL TURN OFF WHEN ADEQUATE DAYLIGHT IS AVAILABLE. CLOCK, RELAY & BAS SYSTEM.

HOURS OF ILLUMINATION FOR PARKING AREAS:
50% OUTPUT FOR THE HOURS OF 12:00 AM TO 5:00 AM
100% OUTPUT FOR ALL OTHER TIMES THAT PHOTOCELL IS ON

G. COORDINATE TELECOMMUNICATIONS AND TV SITE CONDUIT REQUIREMENTS WITH OWNER AND UTILITY. PROVIDE ALL REQUIRED SPLICES, PULLBOXES AND CABLE LENGTHS IN ACCORDANCE WITH UTILITY'S STANDARDS.

H. CONDUIT ROUTES AS SHOWN ARE DIAGRAMMATIC IN NATURE. FIELD VERIFY ACTUAL CONDUIT ROUTES PRIOR TO INSTALLING CONDUIT. PULLBOXES PROVIDE PULL BOXES FOR SITE CABLING AS REQUIRED, BUT NOT TO EXCEED MORE THAN 200' BETWEEN BOXES.

KEYNOTES: 1

1. E.C. TO VERIFY EXACT PANEL LOCATIONS OF MSB/HA AND MSB/G. NEW TRANSFER SWITCH (ALT. BID) TO BE LOCATED IN THIS ROOM.

2. PROVIDE NEW QUAZITE BOX TO INTERCEPT EXISTING (2) 4" CONDUITS.

3. PROVIDE (2) NEW 4" CONDUITS FOR ELECTRICAL SERVICE AS SHOWN ON E010.

4. PROVIDE (2) NEW 1" CONDUITS FOR TELECOMMUNICATIONS SERVICE FROM CUP TO NEW TELECOM ROOM.

5. EXISTING (2) 4" CONDUITS FOR NEW 800A SERVICE AS SHOWN ON E010.

HGA
333 East Erie Street
Milwaukee, Wisconsin 53202
Telephone 414.278.8200

ULINE
12575 Uline Drive
Pleasant Prairie, WI 53158

ULINE
SHIPPING SUPPLY SPECIALISTS

I HEREBY CERTIFY THAT THIS PLAN, SPECIFICATION OR REPORT WAS PREPARED BY ME OR UNDER MY DIRECT SUPERVISION AND THAT I AM A DULY LICENSED PROFESSIONAL ENGINEER UNDER THE LAWS OF THE STATE OF

NAME:
DATE: JULY 10, 2015
REGISTRATION NUMBER:

NO	DESCRIPTION	DATE
	CP-2	07/10/15

ISSUANCE HISTORY - THIS SHEET

HGA NO: 3595-001-00

ELECTRICAL SITE PLAN

DATE: May 8, 2015

CONSTRUCTION DOCUMENTS

E030

© COPYRIGHT HAMMEL, GREEN AND ABRAHAMSON, INC.

7/10/2015 8:11:54 AM C:\Users\gjoshuar\Documents\Revit Local Files\E15-Uline Electrical-359500100_gjoshuar.rvt

1 LOWER LEVEL LIGHTING PLAN
1/8" = 1'-0"

GENERAL NOTES:

A. COORDINATE EGRESS LIGHTING AND EXIT REQUIREMENTS WITH ARCHITECTURAL LIFE SAFETY PLANS.

B. REFER TO THE MECHANICAL DRAWINGS AND COORDINATE WITH DIVISION 23 FOR EXACT LOCATIONS OF MECHANICAL EQUIPMENT AND DIFFUSERS. COORDINATE MOUNTING HEIGHTS AND LOCATIONS OF FIXTURES IN MECHANICAL ROOMS WITH DUCTS, PIPES, AND EQUIPMENT. MOUNT FIXTURES BELOW DUCTS AND PIPES AND AVOID MOUNTING FIXTURES OVER EQUIPMENT. SUPPORT FIXTURES INDEPENDENTLY OF DUCTS, PIPES, AND EQUIPMENT.

C. COORDINATE MOUNTING HEIGHTS AND LOCATIONS OF FIXTURES IN MECHANICAL ROOMS WITH DUCTS, PIPES, AND EQUIPMENT. MOUNT FIXTURES BELOW DUCTS AND PIPING AND AVOID MOUNTING ABOVE EQUIPMENT. SUPPORT FIXTURES INDEPENDENTLY OF DUCTS, PIPES, AND EQUIPMENT.

D. REFER TO EXTERIOR ELEVATIONS FOR MOUNTING HEIGHTS OF EXTERIOR WALL MOUNTED FIXTURES.

E. CONDUIT AND WIRING MAY NOT BE SHOWN GRAPHICALLY ON THE PLANS. HOWEVER IT SHALL BE PROVIDED COMPLETE AS REQUIRED BASED ON IDENTIFICATION OF CIRCUIT NUMBERS, RELAY NUMBERS, SWITCHING IDENTIFICATION, MOTOR EQUIPMENT SCHEDULE, PANEL BOUNDARIES, SPECIFIED MINIMUM CONDUIT SIZE, SPECIFIED MINIMUM CONDUCTOR SIZES, AND/OR SPECIFIED MINIMUM GROUNDING.

F. ALIGN DEVICES VERTICALLY WHERE LIGHTING, POWER, AND SYSTEM DEVICES WITH DIFFERENT MOUNTING HEIGHTS ARE INDICATED CLOSE TO OTHER DEVICES.

G. LIGHT SWITCHES SHALL BE MOUNTED ON LATCH SIDE OF DOOR, WITHIN 12" OF DOOR/SIDELIGHT FRAMING, UNLESS NOTED OTHERWISE. LIGHT SWITCHES INSTALLED ADJACENT TO DOOR SWINGS SHALL BE MOUNTED CLEAR OF DOOR SWING AND WITHIN 12" OF DOOR IN OPEN POSITION. COORDINATE LOCATION WITH OTHER WALL DEVICES.

H. WHERE OCCUPANCY SENSORS ARE SHOWN, PROVIDE APPROPRIATE TYPES AND QUANTITIES OF OCCUPANCY SENSORS TO ACCOMMODATE ROOM GEOMETRY. REFER TO SPEC SECTION 260923 FOR DETAILS. INSTALL OCCUPANCY SENSORS AT LOCATIONS RECOMMENDED BY MANUFACTURER. SEE OCCUPANCY SENSOR SHOP DRAWINGS FOR REFERENCE.

I. PROVIDE NETWORKED RELAY LIGHTING CONTROL PANELS WITH MANUAL OVERRIDE SWITCHES TO CONTROL ALL LARGE PUBLIC SPACES, EXTERIOR LIGHTING AND UNENCLOSED AREAS.

J. PROVIDE A MINIMUM OF (1) EPT DEVICE PER SWITCH LEG WHERE SHOWN ON PLANS. WIRE SO IT ALLOWS EMERGENCY LIGHTS TO BE SWITCHED TOGETHER WITH NORMAL LIGHTING. UNDER LOSS OF POWER, EPT DEVICE SHALL BRING ALL EMERGENCY LIGHTING ON AT FULL REGARDLESS OF SWITCH POSITION. EPT SHALL BE LVS INC OR EQUAL 924 LISTED DEVICE WITH SELF TEST SWITCH. DEVICE MODEL SHALL BE DEPENDANT UPON BALLAST, SWITCHING AND FIXTURE TYPE (FLUOR/LED). VERIFY MODEL REQUIRED WITH PLANS.

K. ALL 120V NORMAL POWER LIGHTING SHALL BE WIRED TO PANEL LA UNLESS NOTED OTHERWISE.

L. ALL 120V LIFE SAFETY AND CRITICAL LIGHTING SHALL BE WIRED TO INVERTER PANEL I-LA UNLESS NOTED OTHERWISE.

M. ALL RELAY CONTROLLED LIGHTING SHALL BE WIRED TO LIGHTING CONTROL PANEL LCP-1.

KEYNOTES: 1

1. MOUNT FIXTURES ON WALL AT 6'-0" ABOVE ELEVATOR PIT FLOOR.

2. WALL/CORNER TYPE OCCUPANCY SENSOR. MOUNT AT 9' AFF. OCCUPANCY SENSORS IN STAIRWELL SHALL BE WIRED TOGETHER SO ANY SENSOR SENSING OCCUPANCY SHALL TURN "ON" ENTIRE STAIR TOWER. SENSOR SHALL FAIL ON.

3. FIXTURES IN CRAWL SPACE SHALL BE SURFACE MOUNTED TO THE CEILING DECK. COORDINATE PLACEMENT OF FIXTURES WITH MECHANICAL DUCTWORK IN SPACE.

HGA
333 East Erie Street
Milwaukee, Wisconsin 53202
Telephone 414.278.8200

ULINE
12575 Uline Drive
Pleasant Prairie, WI 53158

ULINE
SHIPPING SUPPLY SPECIALISTS

I HEREBY CERTIFY THAT THIS PLAN, SPECIFICATION, OR REPORT WAS PREPARED BY ME, OR UNDER MY DIRECT SUPERVISION AND THAT I AM A DULY LICENSED PROFESSIONAL ENGINEER UNDER THE LAWS OF THE STATE OF

NAME:
DATE: JULY 10, 2015
REGISTRATION NUMBER:

NO	DESCRIPTION	DATE
	CP-2	07/10/15

ISSUANCE HISTORY - THIS SHEET

HGA NO: 3595-001-00

BASEMENT LEVEL LIGHTING PLAN OVERALL

DATE: May 8, 2015

CONSTRUCTION DOCUMENTS

E200

© COPYRIGHT HAMMEL, GREEN AND ABRAHAMSON, INC.

7/10/2015 8:11:56 AM C:\Users\jdechant\Documents\Revit Local Files\E15-Uline Electrical_359500100_rfdechant.rvt

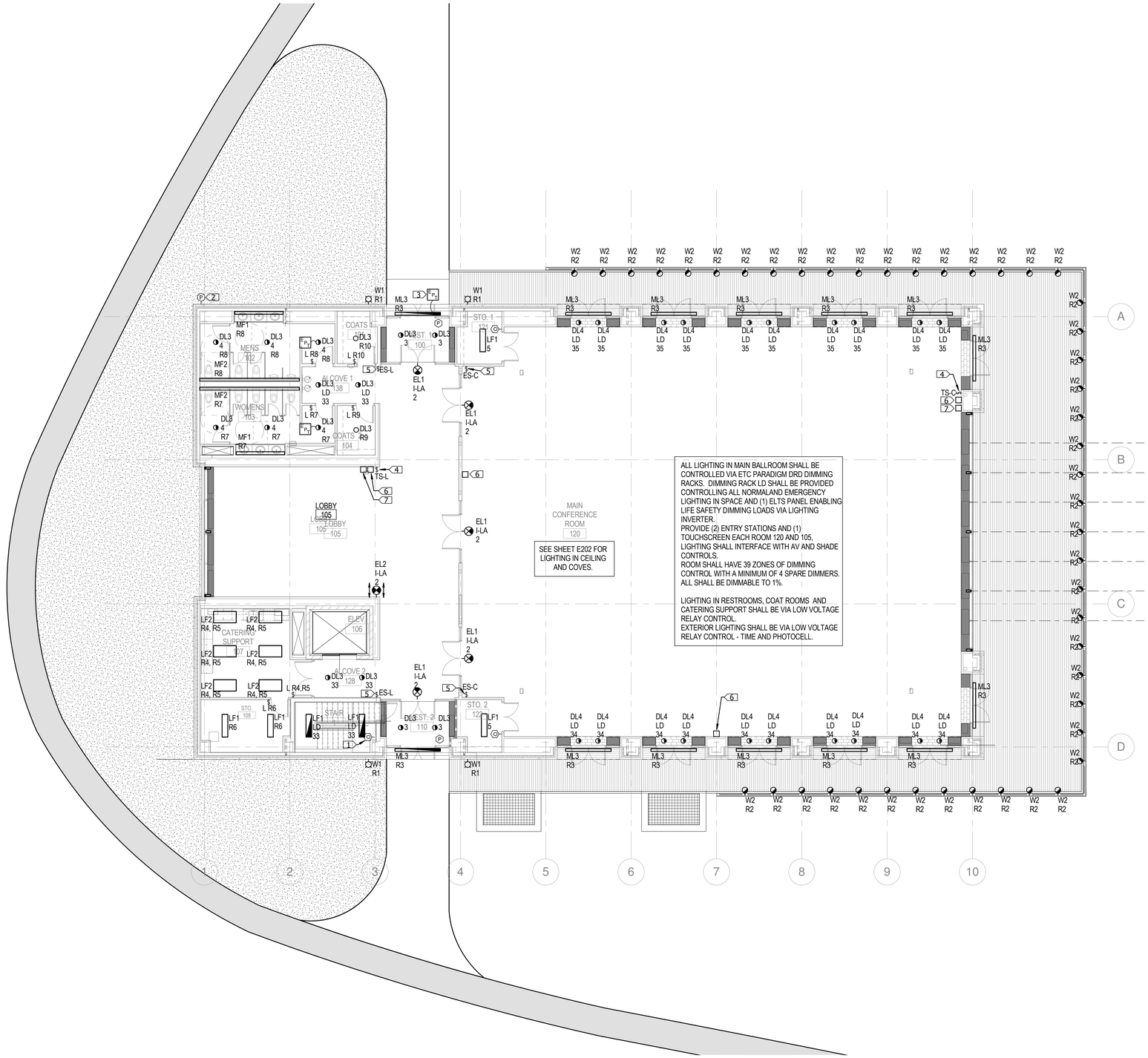

1 FIRST LEVEL LIGHTING PLAN
1/8" = 1'-0"

GENERAL NOTES:

A. COORDINATE EGRESS LIGHTING AND EXIT REQUIREMENTS WITH ARCHITECTURAL LIFE SAFETY PLANS.

B. REFER TO THE MECHANICAL DRAWINGS AND COORDINATE WITH DIVISION 23 FOR EXACT LOCATIONS OF MECHANICAL EQUIPMENT AND DIFFUSERS. COORDINATE MOUNTING HEIGHTS AND LOCATIONS OF FIXTURES IN MECHANICAL ROOMS WITH DUCTS, PIPES, AND EQUIPMENT. MOUNT FIXTURES BELOW DUCTS AND PIPES AND AVOID MOUNTING FIXTURES OVER EQUIPMENT. SUPPORT FIXTURES INDEPENDENTLY OF DUCTS, PIPES, AND EQUIPMENT.

C. COORDINATE MOUNTING HEIGHTS AND LOCATIONS OF FIXTURES IN MECHANICAL ROOMS WITH DUCTS, PIPES, AND EQUIPMENT. MOUNT FIXTURES BELOW DUCTS AND PIPING AND AVOID MOUNTING ABOVE EQUIPMENT. SUPPORT FIXTURES INDEPENDENTLY OF DUCTS, PIPES, AND EQUIPMENT.

D. REFER TO EXTERIOR ELEVATIONS FOR MOUNTING HEIGHTS OF EXTERIOR WALL MOUNTED FIXTURES.

E. CONDUIT AND WIRING MAY NOT BE SHOWN GRAPHICALLY ON THE PLANS. HOWEVER IT SHALL BE PROVIDED COMPLETE AS REQUIRED BASED ON IDENTIFICATION OF CIRCUIT NUMBERS, RELAY NUMBERS, SWITCHING IDENTIFICATION, MOTOR EQUIPMENT SCHEDULE, PANEL BOUNDARIES, SPECIFIED MINIMUM CONDUIT SIZE, SPECIFIED MINIMUM CONDUCTOR SIZES, AND/OR SPECIFIED MINIMUM GROUNDING.

F. ALIGN DEVICES VERTICALLY WHERE LIGHTING, POWER, AND SYSTEM DEVICES WITH DIFFERENT MOUNTING HEIGHTS ARE INDICATED CLOSE TO OTHER DEVICES.

G. LIGHT SWITCHES SHALL BE MOUNTED ON LATCH SIDE OF DOOR, WITHIN 12" OF DOOR/SIDELIGHT FRAMING, UNLESS NOTED OTHERWISE. LIGHT SWITCHES INSTALLED ADJACENT TO DOOR SWINGS SHALL BE MOUNTED CLEAR OF DOOR SWING AND WITHIN 12" OF DOOR IN OPEN POSITION. COORDINATE LOCATION WITH OTHER WALL DEVICES.

H. WHERE OCCUPANCY SENSORS ARE SHOWN, PROVIDE APPROPRIATE TYPES AND QUANTITIES OF OCCUPANCY SENSORS TO ACCOMMODATE ROOM GEOMETRY. REFER TO SPEC SECTION 260923 FOR DETAILS. INSTALL OCCUPANCY SENSORS AT LOCATIONS RECOMMENDED BY MANUFACTURER. SEE OCCUPANCY SENSOR SHOP DRAWINGS FOR REFERENCE.

I. PROVIDE NETWORKED RELAY LIGHTING CONTROL PANELS WITH MANUAL OVERRIDE SWITCHES TO CONTROL ALL LARGE PUBLIC SPACES, EXTERIOR LIGHTING AND UNENCLOSED AREAS.

J. PROVIDE A MINIMUM OF (1) EPT DEVICE PER SWITCH LEG WHERE SHOWN ON PLANS. WIRE SO IT ALLOWS EMERGENCY LIGHTS TO BE SWITCHED TOGETHER WITH NORMAL LIGHTING. UNDER LOSS OF POWER, EPT DEVICE SHALL BRING ALL EMERGENCY LIGHTING ON AT FULL REGARDLESS OF SWITCH POSITION. EPT SHALL BE LVS INC OR EQUAL 924 LISTED DEVICE WITH SELF TEST SWITCH. DEVICE MODEL SHALL BE DEPENDANT UPON BALLAST, SWITCHING AND FIXTURE TYPE (FLUORLED). VERIFY MODEL REQUIRED WITH PLANS.

K. ALL 120V NORMAL POWER LIGHTING SHALL BE WIRED TO PANEL LA UNLESS NOTED OTHERWISE.

L. ALL 120V LIFE SAFETY AND CRITICAL LIGHTING SHALL BE WIRED TO INVERTER PANEL I-LA UNLESS NOTED OTHERWISE.

M. ALL RELAY CONTROLLED LIGHTING SHALL BE WIRED TO LIGHTING CONTROL PANEL LCP-1.

KEYNOTES: 1

1. WALL/CORNER TYPE OCCUPANCY SENSOR. MOUNT AT 9' AFF. OCCUPANCY SENSORS IN STAIRWELL SHALL BE WIRED TOGETHER SO ANY SENSOR SENSING OCCUPANCY SHALL TURN "ON" ENTIRE STAIR TOWER. SENSOR SHALL FAIL-ON.

2. EXTERIOR PHOTOCELL "P1". MOUNT HIGH ON ROOF, AIM NORTH.

3. MOUNT EPT IN ELECTRICAL ROOM 002 ADJACENT TO PANEL "LA". LABEL EPT WITH CIRCUIT AND LOAD IDENTIFIER.

4. ETC PARADIGM RECESSED TOUCHSCREEN PANEL, CAT NO P-TS7-CUSTOM-P-LCD-FBB. VERIFY CUSTOM STATION RAL COLOR WITH ARCHTECT.

5. ETC PARADIGM 5 BUTTON, 1 FADER ENTRY STATION, CAT NO UH10007-CUSTOM-1F. VERIFY CUSTOM STATION RAL COLOR WITH ARCHTECT.

6. ETC DMX/RDM INPUT LIGHTING INTERFACE. RECESSED MOUNTED.

7. ETC UH1RS PORTABLE TOUCHSCREEN RECEPTACLE STATION. RECESSED MOUNTED,

hga.
333 East Erie Street
Milwaukee, Wisconsin 53202
Telephone 414.278.8200

ULINE
12575 Uline Drive
Pleasant Prairie, WI 53158

ULINE
SHIPPING SUPPLY SPECIALISTS

I HEREBY CERTIFY THAT THIS PLAN, SPECIFICATION, OR REPORT WAS PREPARED BY ME OR UNDER MY DIRECT SUPERVISION AND THAT I AM A DULY LICENSED PROFESSIONAL ENGINEER UNDER THE LAWS OF THE STATE OF

NAME:
DATE: JULY 10, 2015
REGISTRATION NUMBER:

NO	DESCRIPTION	DATE
	CP-2	07/10/15

ISSUANCE HISTORY - THIS SHEET

HGA NO: 3595-001-00

FIRST LEVEL LIGHTING PLAN OVERALL

DATE: May 8, 2015

CONSTRUCTION DOCUMENTS

E201

© COPYRIGHT HAMMEL, GREEN AND ABRAHAMSON, INC.

7/10/2015 8:11:59 AM C:\Users\jdickson\Documents\Revit Local Files\15-Uline Electrical_3595001100_rfdickson.rvt

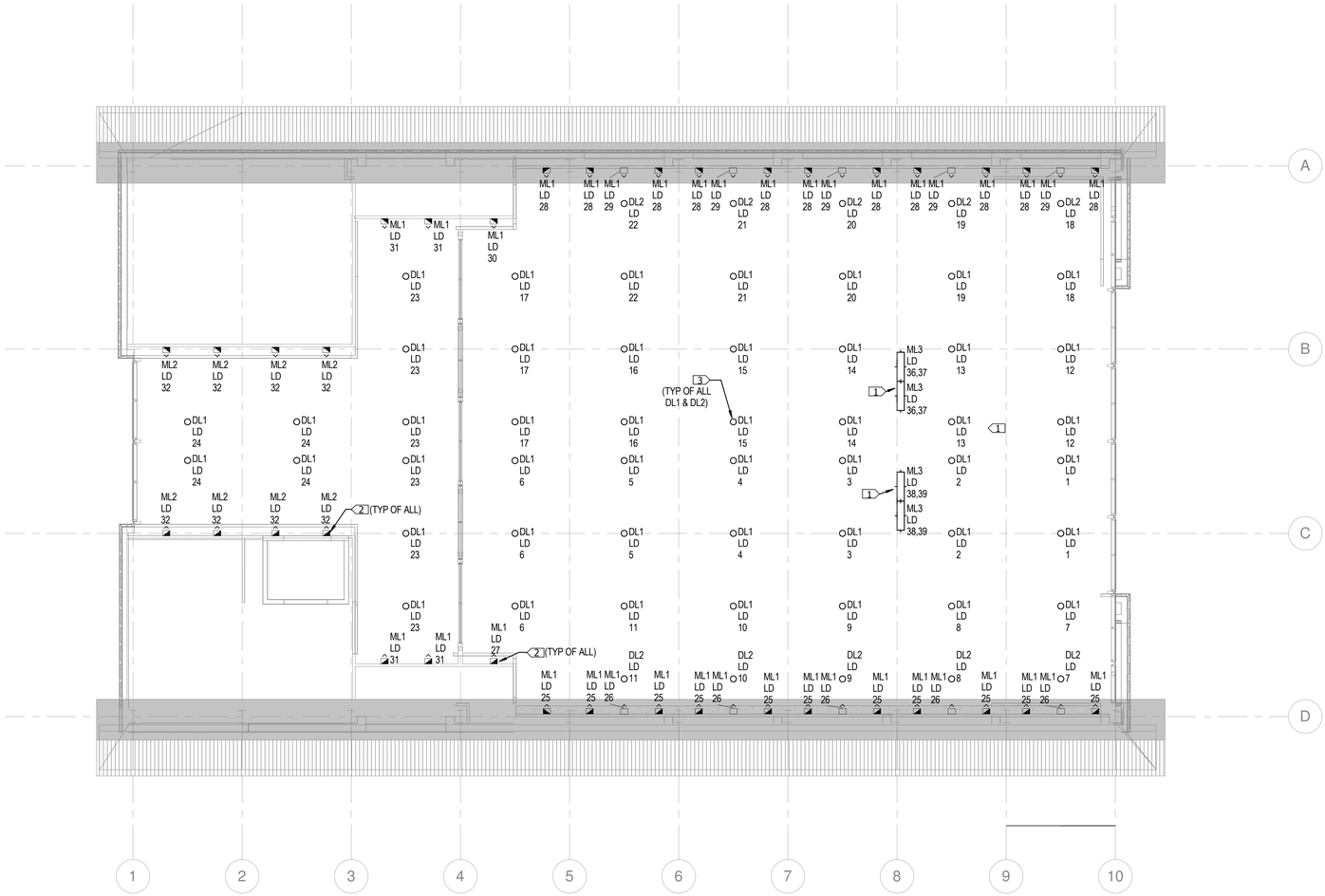

1 SECOND LEVEL LIGHTING PLAN
1/8" = 1'-0"

GENERAL NOTES:

A. COORDINATE EGRESS LIGHTING AND EXIT REQUIREMENTS WITH ARCHITECTURAL LIFE SAFETY PLANS.

B. REFER TO THE MECHANICAL DRAWINGS AND COORDINATE WITH DIVISION 23 FOR EXACT LOCATIONS OF MECHANICAL EQUIPMENT AND DIFFUSERS. COORDINATE MOUNTING HEIGHTS AND LOCATIONS OF FIXTURES IN MECHANICAL ROOMS WITH DUCTS, PIPES, AND EQUIPMENT. MOUNT FIXTURES BELOW DUCTS AND PIPES AND AVOID MOUNTING FIXTURES OVER EQUIPMENT. SUPPORT FIXTURES INDEPENDENTLY OF DUCTS, PIPES, AND EQUIPMENT.

C. COORDINATE MOUNTING HEIGHTS AND LOCATIONS OF FIXTURES IN MECHANICAL ROOMS WITH DUCTS, PIPES, AND EQUIPMENT. MOUNT FIXTURES BELOW DUCTS AND PIPING AND AVOID MOUNTING ABOVE EQUIPMENT. SUPPORT FIXTURES INDEPENDENTLY OF DUCTS, PIPES, AND EQUIPMENT.

D. REFER TO EXTERIOR ELEVATIONS FOR MOUNTING HEIGHTS OF EXTERIOR WALL MOUNTED FIXTURES.

E. CONDUIT AND WIRING MAY NOT BE SHOWN GRAPHICALLY ON THE PLANS. HOWEVER IT SHALL BE PROVIDED COMPLETE AS REQUIRED BASED ON IDENTIFICATION OF CIRCUIT NUMBERS, RELAY NUMBERS, SWITCHING IDENTIFICATION, MOTOR EQUIPMENT SCHEDULE, PANEL BOUNDARIES, SPECIFIED MINIMUM CONDUIT SIZE, SPECIFIED MINIMUM CONDUCTOR SIZES, AND/OR SPECIFIED MINIMUM GROUNDING.

F. ALIGN DEVICES VERTICALLY WHERE LIGHTING, POWER, AND SYSTEM DEVICES WITH DIFFERENT MOUNTING HEIGHTS ARE INDICATED CLOSE TO OTHER DEVICES.

G. LIGHT SWITCHES SHALL BE MOUNTED ON LATCH SIDE OF DOOR, WITHIN 12" OF DOOR/SIDELIGHT FRAMING, UNLESS NOTED OTHERWISE. LIGHT SWITCHES INSTALLED ADJACENT TO DOOR SWINGS SHALL BE MOUNTED CLEAR OF DOOR SWING AND WITHIN 12" OF DOOR IN OPEN POSITION. COORDINATE LOCATION WITH OTHER WALL DEVICES.

H. WHERE OCCUPANCY SENSORS ARE SHOWN, PROVIDE APPROPRIATE TYPES AND QUANTITIES OF OCCUPANCY SENSORS TO ACCOMMODATE ROOM GEOMETRY. REFER TO SPEC SECTION 260923 FOR DETAILS. INSTALL OCCUPANCY SENSORS AT LOCATIONS RECOMMENDED BY MANUFACTURER. SEE OCCUPANCY SENSOR SHOP DRAWINGS FOR REFERENCE.

I. PROVIDE NETWORKED RELAY LIGHTING CONTROL PANELS WITH MANUAL OVERRIDE SWITCHES TO CONTROL ALL LARGE PUBLIC SPACES, EXTERIOR LIGHTING AND UNENCLOSED AREAS.

J. PROVIDE A MINIMUM OF (1) EPT DEVICE PER SWITCH LEG WHERE SHOWN ON PLANS. WIRE SO IT ALLOWS EMERGENCY LIGHTS TO BE SWITCHED TOGETHER WITH NORMAL LIGHTING. UNDER LOSS OF POWER, EPT DEVICE SHALL BRING ALL EMERGENCY LIGHTING ON AT FULL REGARDLESS OF SWITCH POSITION. EPT SHALL BE LVS INC OR EQUAL 924 LISTED DEVICE WITH SELF TEST SWITCH. DEVICE MODEL SHALL BE DEPENDANT UPON BALLAST, SWITCHING AND FIXTURE TYPE (FLUOR/LED). VERIFY MODEL REQUIRED WITH PLANS.

K. ALL 120V NORMAL POWER LIGHTING SHALL BE WIRED TO PANEL LA UNLESS NOTED OTHERWISE.

L. ALL 120V LIFE SAFETY AND CRITICAL LIGHTING SHALL BE WIRED TO INVERTER PANEL I-LA UNLESS NOTED OTHERWISE.

M. ALL RELAY CONTROLLED LIGHTING SHALL BE WIRED TO LIGHTING CONTROL PANEL LCP-1.

KEYNOTES:

1. MOUNT FIXTURES TO SIDE OF BEAM IN ARCHITECTURAL NICHE. SEE ARCHITECTURAL DRAWINGS FOR MOUNTING COORDINATION. EACH 4' FIXTURE SHALL HAVE 2 CIRCUITS (EVERY OTHER HEAD CIRCUITED TOGETHER). FIXTURE AIMING SHALL BE COORDINATED WITH OWNER BASED ON DESIRED SPEAKING POSITIONS. LIGHTING SHALL BE KEPT OFF THE PROJECTION SCREEN.

2. FIXTURE TYPES ML1 AND ML2 ARE TO BE MOUNTED TO BOTTOM OF ARCHITECTURAL COVE AS FAR BACK AS POSSIBLE. FIXTURES SHALL BE AIMED TO WASH CEILING CONSISTENTLY AND EVENLY. COORDINATE FIXTURE PLACEMENT WITH ARCHITECTURAL DETAILS.

3. DOWNLIGHT FIXTURE TYPES DL1 AND DL2 ARE MOUNTED ON SLOPED CEILINGS AND ARE TO BE ADJUSTED SO BEAM IS AIMED STRAIGHT DOWN TO THE FLOOR (APPROXIMATELY 22.5 DEGREE ANGLE).

HGA
333 East Erie Street
Milwaukee, Wisconsin 53202
Telephone 414.278.8200

ULINE
12575 Uline Drive
Pleasant Prairie, WI 53158

ULINE
SHIPPING SUPPLY SPECIALISTS

I HEREBY CERTIFY THAT THIS PLAN, SPECIFICATION OR REPORT WAS PREPARED BY ME OR UNDER MY DIRECT SUPERVISION AND THAT I AM A DULY LICENSED PROFESSIONAL ENGINEER UNDER THE LAWS OF THE STATE OF

NAME:
DATE: JULY 10, 2015
REGISTRATION NUMBER:

NO	DESCRIPTION	DATE
	CP-2	07/10/15

ISSUANCE HISTORY - THIS SHEET

HGA NO: 3595-001-00

SECOND LEVEL LIGHTING PLAN OVERALL

DATE: May 8, 2015

CONSTRUCTION DOCUMENTS

E202

© COPYRIGHT HAMMEL, GREEN AND ABRAHAMSON, INC.

7/10/2015 8:12:02 AM C:\Users\jfleshner\Documents\Revit Local Files\E15-Uline Electrical-359501109_jfleshner.rvt

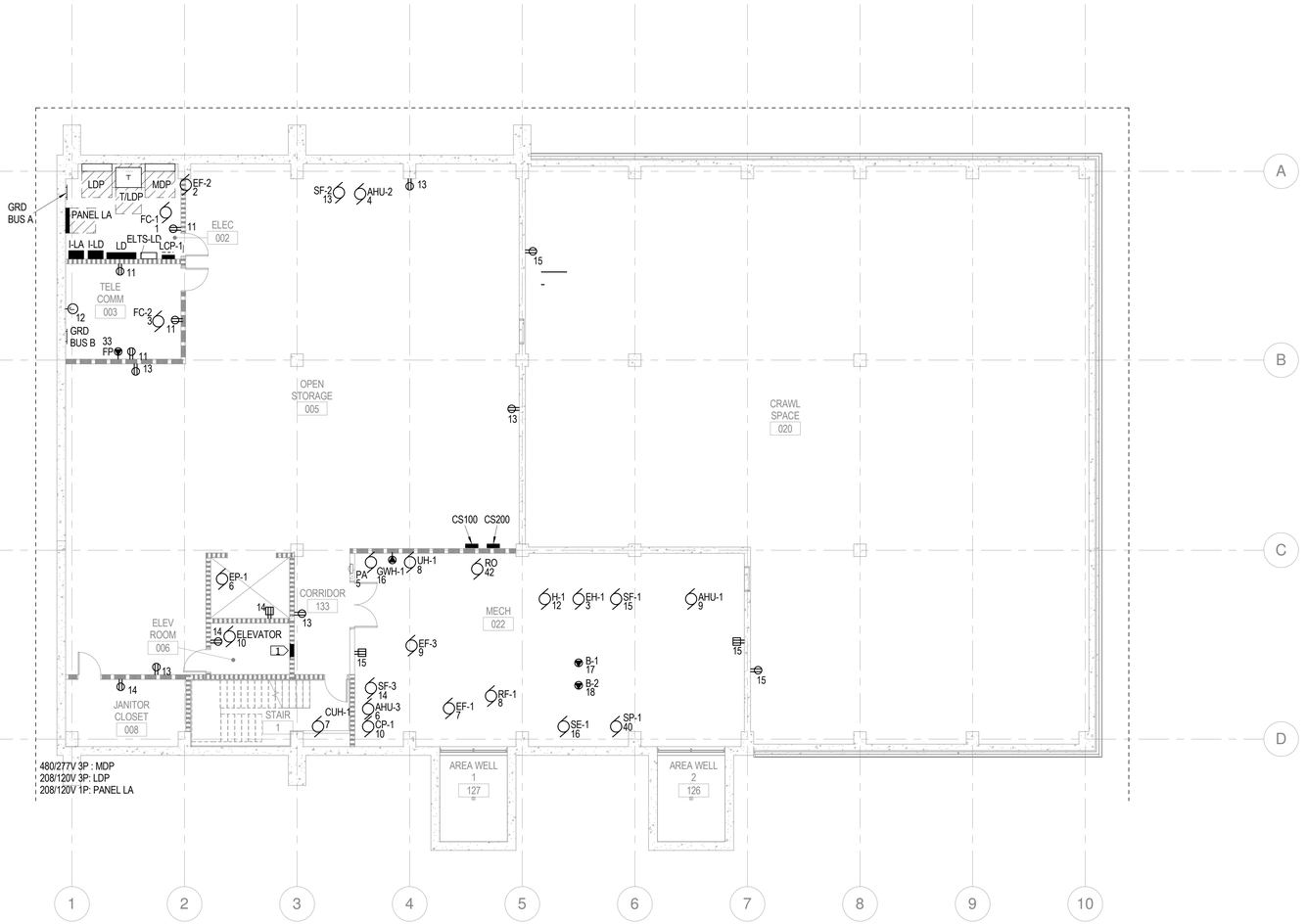

1 BASEMENT LEVEL POWER PLAN
1/8" = 1'-0"

GENERAL NOTES:

A. REFER TO MECHANICAL-ELECTRICAL COORDINATION SCHEDULE FOR ADDITIONAL MOTOR INFORMATION.

B. COORDINATE LOCATION AND MOUNTING OF DEVICES WITH MILLWORK AND CASEWORK.

C. REFER TO EQUIPMENT MANUAL FOR EQUIPMENT REQUIREMENTS. COORDINATE WITH OWNER FURNISHED EQUIPMENT FOR ADDITIONAL EQUIPMENT REQUIREMENTS.

D. IN AREAS WITH GFCI RECEPTACLES, CIRCUIT ALL DEVICES REQUIRING GFCI PROTECTION ON THE LOAD SIDE OF THE GFCI DEVICE. CIRCUIT ALL DEVICES NOT REQUIRING GFCI PROTECTION ON THE LINE SIDE OF THE GFCI DEVICE.

E. COORDINATE DEVICE LOCATIONS AND ELEVATIONS AT ALL WORKSTATIONS WITH FINAL FURNITURE PLANS AND SHOP DRAWINGS PRIOR TO DEVICE ROUGH-IN.

F. ELECTRICAL & SYSTEMS DEVICES & EQUIPMENT SHOWN AS SCREENED ARE EXISTING TO REMAIN. THE ELECTRICAL CONTRACTOR IS RESPONSIBLE FOR FIELD VERIFYING LOCATIONS OF EXISTING SYSTEMS PRIOR TO CONSTRUCTION AND NOTIFY THE ENGINEER OF ANY DISCREPANCIES WHICH MAY AFFECT ANY WORK UNDER THIS CONTRACT.

G. REFER TO THE ARCHITECTURAL DETAILS AND ELEVATION DRAWINGS FOR COORDINATION OF ELECTRICAL DEVICES

H. ALL DEVICES IN FINISHED AREAS ARE TO BE RECESSED FLUSH WITHIN WALLS EXCEPT WHERE REQUIRED TO BE SURFACE MOUNTED ON PRECAST CONCRETE WALLS. IN UNFINISHED AREAS (E.G. PLUMBING CHASES, JANITORS CLOSETS, ELECTRICAL ROOMS, MECHANICAL ROOMS, AND ETC.) DEVICES AND CONDUIT MAY BE SURFACE MOUNTED

I. DEVICES AND EQUIPMENT SHALL BE CIRCUITED FROM PANELS AS INDICATED BY THE CIRCUITING BOUNDARY SHOWN ON THE PLAN UNLESS NOTED OTHERWISE.

J. CONDUIT AND WIRING MAY NOT BE SHOWN GRAPHICALLY ON THE PLANS. HOWEVER IT SHALL BE PROVIDED COMPLETE AS REQUIRED BASED ON IDENTIFICATION OF CIRCUIT NUMBERS, RELAY NUMBERS, SWITCHING IDENTIFICATION, MOTOR EQUIPMENT SCHEDULE, PANEL BOUNDARIES, SPECIFIED MINIMUM CONDUIT SIZE, SPECIFIED MINIMUM CONDUCTOR SIZES, AND/OR SPECIFIED MINIMUM GROUNDING.

K. REFER TO ONE-LINE DIAGRAMS FOR ADDITIONAL INFORMATION FOR FEEDERS AND ELECTRICAL EQUIPMENT.

L. PROVIDE CIRCUIT BREAKER "LOCK-ON" FOR FACP CIRCUIT(S).

M. MOUNT POWER RECEPTACLES AT THE SAME ELEVATION AND WITHIN 12" OF THE ADJACENT DATA JACK/ROUGH-IN. COORDINATE LOCATIONS WITH SYSTEMS DRAWINGS.

N. ALIGN DEVICES VERTICALLY WHERE LIGHTING, POWER, AND SYSTEM DEVICES WITH DIFFERENT MOUNTING HEIGHTS ARE INDICATED CLOSE TO OTHER DEVICES.

O. DEDICATED RECEPTACLES, ON A CIRCUIT WITH NO OTHER DEVICES, SHALL BE LABELED AS "DEDICATED CIRCUIT RECEPTACLE".

P. PROVIDE DEDICATED NEUTRAL FOR EACH MULTIWIRE BRANCH CIRCUIT PHASE CONDUCTOR.

KEYNOTES: 1

1. POWER MODULE FOR ELEVATOR.

hga
333 East Erie Street
Milwaukee, Wisconsin 53202
Telephone 414.278.8200

ULINE
12575 Uline Drive
Pleasant Prairie, WI 53158

ULINE
SHIPPING SUPPLY SPECIALISTS

I HEREBY CERTIFY THAT THIS PLAN, SPECIFICATION OR REPORT WAS PREPARED BY ME OR UNDER MY DIRECT SUPERVISION AND THAT I AM A DULY LICENSED PROFESSIONAL ENGINEER UNDER THE LAWS OF THE STATE OF

NAME:
DATE: JULY 10, 2015
REGISTRATION NUMBER:

NO	DESCRIPTION	DATE
	CP-2	07/10/15

ISSUANCE HISTORY - THIS SHEET

HGA NO: 3595-001-00

BASEMENT LEVEL POWER PLAN OVERALL

DATE: May 8, 2015

CONSTRUCTION DOCUMENTS

E300

© COPYRIGHT HAMMEL, GREEN AND ABRAHAMSON, INC.

7/10/2015 8:12:04 AM C:\Users\jlashaur\Documents\Revit Local Files\E15-Uline Electrical-3595R19.rvt

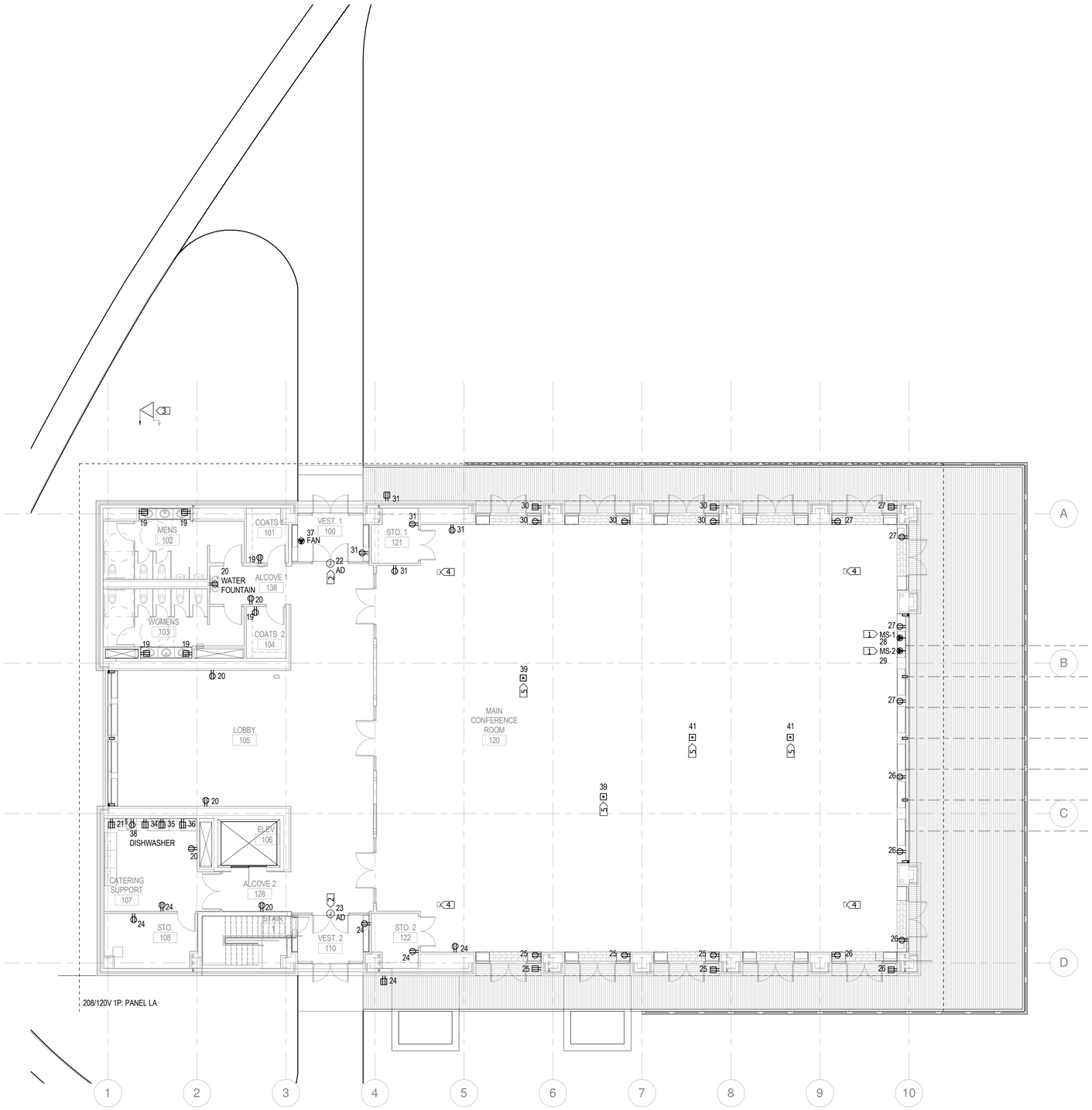

1 FIRST LEVEL POWER PLAN
1/8" = 1'-0"

GENERAL NOTES:

A. REFER TO MECHANICAL-ELECTRICAL COORDINATION SCHEDULE FOR ADDITIONAL MOTOR INFORMATION.

B. COORDINATE LOCATION AND MOUNTING OF DEVICES WITH MILLWORK AND CASEWORK.

C. REFER TO EQUIPMENT MANUAL FOR EQUIPMENT REQUIREMENTS. COORDINATE WITH OWNER FURNISHED EQUIPMENT FOR ADDITIONAL EQUIPMENT REQUIREMENTS.

D. IN AREAS WITH GFCI RECEPTACLES, CIRCUIT ALL DEVICES REQUIRING GFCI PROTECTION ON THE LOAD SIDE OF THE GFCI DEVICE. CIRCUIT ALL DEVICES NOT REQUIRING GFCI PROTECTION ON THE LINE SIDE OF THE GFCI DEVICE.

E. COORDINATE DEVICE LOCATIONS AND ELEVATIONS AT ALL WORKSTATIONS WITH FINAL FURNITURE PLANS AND SHOP DRAWINGS PRIOR TO DEVICE ROUGH-IN.

F. ELECTRICAL & SYSTEMS DEVICES & EQUIPMENT SHOWN AS SCREENED ARE EXISTING TO REMAIN. THE ELECTRICAL CONTRACTOR IS RESPONSIBLE FOR FIELD VERIFYING LOCATIONS OF EXISTING SYSTEMS PRIOR TO CONSTRUCTION AND NOTIFY THE ENGINEER OF ANY DISCREPANCIES WHICH MAY AFFECT ANY WORK UNDER THIS CONTRACT.

G. REFER TO THE ARCHITECTURAL DETAILS AND ELEVATION DRAWINGS FOR COORDINATION OF ELECTRICAL DEVICES

H. ALL DEVICES IN FINISHED AREAS ARE TO BE RECESSED FLUSH WITHIN WALLS EXCEPT WHERE REQUIRED TO BE SURFACE MOUNTED ON PRECAST CONCRETE WALLS. IN UNFINISHED AREAS (E.G. PLUMBING CHASES, JANITORS CLOSETS, ELECTRICAL ROOMS, MECHANICAL ROOMS, AND ETC.) DEVICES AND CONDUIT MAY BE SURFACE MOUNTED

I. DEVICES AND EQUIPMENT SHALL BE CIRCUITED FROM PANELS AS INDICATED BY THE CIRCUITING BOUNDARY SHOWN ON THE PLAN UNLESS NOTED OTHERWISE.

J. CONDUIT AND WIRING MAY NOT BE SHOWN GRAPHICALLY ON THE PLANS. HOWEVER IT SHALL BE PROVIDED COMPLETE AS REQUIRED BASED ON IDENTIFICATION OF CIRCUIT NUMBERS, RELAY NUMBERS, SWITCHING IDENTIFICATION, MOTOR EQUIPMENT SCHEDULE, PANEL BOUNDARIES, SPECIFIED MINIMUM CONDUIT SIZE, SPECIFIED MINIMUM CONDUCTOR SIZES, AND/OR SPECIFIED MINIMUM GROUNDING.

K. REFER TO ONE-LINE DIAGRAMS FOR ADDITIONAL INFORMATION FOR FEEDERS AND ELECTRICAL EQUIPMENT.

L. PROVIDE CIRCUIT BREAKER "LOCK-ON" FOR FACP CIRCUIT(S).

M. MOUNT POWER RECEPTACLES AT THE SAME ELEVATION AND WITHIN 12" OF THE ADJACENT DATA JACK/ROUGH-IN. COORDINATE LOCATIONS WITH SYSTEMS DRAWINGS.

N. ALIGN DEVICES VERTICALLY WHERE LIGHTING, POWER, AND SYSTEM DEVICES WITH DIFFERENT MOUNTING HEIGHTS ARE INDICATED CLOSE TO OTHER DEVICES.

O. DEDICATED RECEPTACLES, ON A CIRCUIT WITH NO OTHER DEVICES, SHALL BE LABELED AS "DEDICATED CIRCUIT RECEPTACLE".

P. PROVIDE DEDICATED NEUTRAL FOR EACH MULTIWIRE BRANCH CIRCUIT PHASE CONDUCTOR.

KEYNOTES: 1

1. E.C. TO VERIFY EXACT ELECTRICAL REQUIREMENTS FOR MECCO-SHADES.

2. E.C. TO VERIFY AND PROVIDE CONTROL NEEDS FOR AUTO-DOOR OPERATOR.

3. GROUND BUS FOR ELECTRICAL SERVICE, SEE DETAIL 1 ON SHEET E601.

4. CUSTOM ACCESS BOXES FOR COMPANY SWITCH CORDS. THOMAS AND BETTS 667.

5. FLOOR BOX THOMAS BETTS 667 WITH TOW DUPLEX RECEPTACLES AND FOUR TELECOM JACKS. CARPET TRIM TO BE SELECTED BY ARCHITECT.

hga
333 East Erie Street
Milwaukee, Wisconsin 53202
Telephone 414.278.8200

ULINE
12575 Uline Drive
Pleasant Prairie, WI 53158

ULINE
SHIPPING SUPPLY SPECIALISTS

I HEREBY CERTIFY THAT THIS PLAN, SPECIFICATION OR REPORT WAS PREPARED BY ME OR UNDER MY DIRECT SUPERVISION AND THAT I AM A DULY LICENSED PROFESSIONAL ENGINEER UNDER THE LAWS OF THE STATE OF

NAME:
DATE: JULY 10, 2015
REGISTRATION NUMBER:

NO	DESCRIPTION	DATE
	CP-2	07/10/15

ISSUANCE HISTORY - THIS SHEET

HGA NO: 3595-001-00

FIRST LEVEL POWER PLAN OVERALL

DATE: May 8, 2015

CONSTRUCTION DOCUMENTS

E301

© COPYRIGHT HAMMEL, GREEN AND ABRAHAMSON, INC.

7/10/2015 8:12:06 AM C:\Users\jfichuan\Documents\Revit Local Files\E15-Uline Electrical-3595001100_dfichuan.rvt

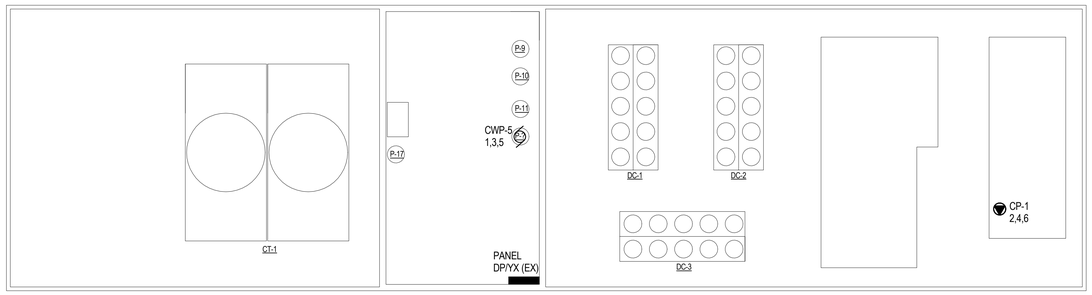

1 CUP PLAN
1/8" = 1'-0"

GENERAL NOTES:

A. REFER TO MECHANICAL-ELECTRICAL COORDINATION SCHEDULE FOR ADDITIONAL MOTOR INFORMATION.

B. COORDINATE LOCATION AND MOUNTING OF DEVICES WITH MILLWORK AND CASEWORK.

C. REFER TO EQUIPMENT MANUAL FOR EQUIPMENT REQUIREMENTS. COORDINATE WITH OWNER FURNISHED EQUIPMENT FOR ADDITIONAL EQUIPMENT REQUIREMENTS.

D. IN AREAS WITH GFCI RECEPTACLES, CIRCUIT ALL DEVICES REQUIRING GFCI PROTECTION ON THE LOAD SIDE OF THE GFCI DEVICE. CIRCUIT ALL DEVICES NOT REQUIRING GFCI PROTECTION ON THE LINE SIDE OF THE GFCI DEVICE.

E. COORDINATE DEVICE LOCATIONS AND ELEVATIONS AT ALL WORKSTATIONS WITH FINAL FURNITURE PLANS AND SHOP DRAWINGS PRIOR TO DEVICE ROUGH-IN.

F. ELECTRICAL & SYSTEMS DEVICES & EQUIPMENT SHOWN AS SCREENED ARE EXISTING TO REMAIN. THE ELECTRICAL CONTRACTOR IS RESPONSIBLE FOR FIELD VERIFYING LOCATIONS OF EXISTING SYSTEMS PRIOR TO CONSTRUCTION AND NOTIFY THE ENGINEER OF ANY DISCREPANCIES WHICH MAY AFFECT ANY WORK UNDER THIS CONTRACT.

G. REFER TO THE ARCHITECTURAL DETAILS AND ELEVATION DRAWINGS FOR COORDINATION OF ELECTRICAL DEVICES

H. ALL DEVICES IN FINISHED AREAS ARE TO BE RECESSED FLUSH WITHIN WALLS EXCEPT WHERE REQUIRED TO BE SURFACE MOUNTED ON PRECAST CONCRETE WALLS. IN UNFINISHED AREAS (E.G. PLUMBING CHASES, JANITORS CLOSETS, ELECTRICAL ROOMS, MECHANICAL ROOMS, AND ETC.) DEVICES AND CONDUIT MAY BE SURFACE MOUNTED

I. DEVICES AND EQUIPMENT SHALL BE CIRCUITED FROM PANELS AS INDICATED BY THE CIRCUITING BOUNDARY SHOWN ON THE PLAN UNLESS NOTED OTHERWISE.

J. CONDUIT AND WIRING MAY NOT BE SHOWN GRAPHICALLY ON THE PLANS. HOWEVER IT SHALL BE PROVIDED COMPLETE AS REQUIRED BASED ON IDENTIFICATION OF CIRCUIT NUMBERS, RELAY NUMBERS, SWITCHING IDENTIFICATION, MOTOR EQUIPMENT SCHEDULE, PANEL BOUNDARIES, SPECIFIED MINIMUM CONDUIT SIZE, SPECIFIED MINIMUM CONDUCTOR SIZES, AND/OR SPECIFIED MINIMUM GROUNDING.

K. REFER TO ONE-LINE DIAGRAMS FOR ADDITIONAL INFORMATION FOR FEEDERS AND ELECTRICAL EQUIPMENT.

L. PROVIDE CIRCUIT BREAKER "LOCK-ON" FOR FACP CIRCUIT(S).

M. MOUNT POWER RECEPTACLES AT THE SAME ELEVATION AND WITHIN 12" OF THE ADJACENT DATA JACK/ROUGH-IN. COORDINATE LOCATIONS WITH SYSTEMS DRAWINGS.

N. ALIGN DEVICES VERTICALLY WHERE LIGHTING, POWER, AND SYSTEM DEVICES WITH DIFFERENT MOUNTING HEIGHTS ARE INDICATED CLOSE TO OTHER DEVICES.

O. DEDICATED RECEPTACLES, ON A CIRCUIT WITH NO OTHER DEVICES, SHALL BE LABELED AS "DEDICATED CIRCUIT RECEPTACLE".

P. PROVIDE DEDICATED NEUTRAL FOR EACH MULTIWIRE BRANCH CIRCUIT PHASE CONDUCTOR.

HGA
333 East Erie Street
Milwaukee, Wisconsin 53202
Telephone 414.278.8200

ULINE
12575 Uline Drive
Pleasant Prairie, WI 53158

ULINE
SHIPPING SUPPLY SPECIALISTS

I HEREBY CERTIFY THAT THIS PLAN, SPECIFICATION OR REPORT WAS PREPARED BY ME OR UNDER MY DIRECT SUPERVISION AND THAT I AM A DULY LICENSED PROFESSIONAL ENGINEER UNDER THE LAWS OF THE STATE OF

NAME:
DATE: JULY 10, 2015
REGISTRATION NUMBER:

NO	DESCRIPTION	DATE
	CP-2	07/10/15

ISSUANCE HISTORY - THIS SHEET

HGA NO: 3595-001-00

CUP ELECTRICAL PLAN

DATE: May 8, 2015

CONSTRUCTION DOCUMENTS

E350

© COPYRIGHT HAMMEL, GREEN AND ABRAHAMSON, INC.

7/10/2015 8:12:07 AM C:\Users\gjoshua\Documents\Revit Local Files\E15-Uline Electrical-359500100_gjoshuar.rvt

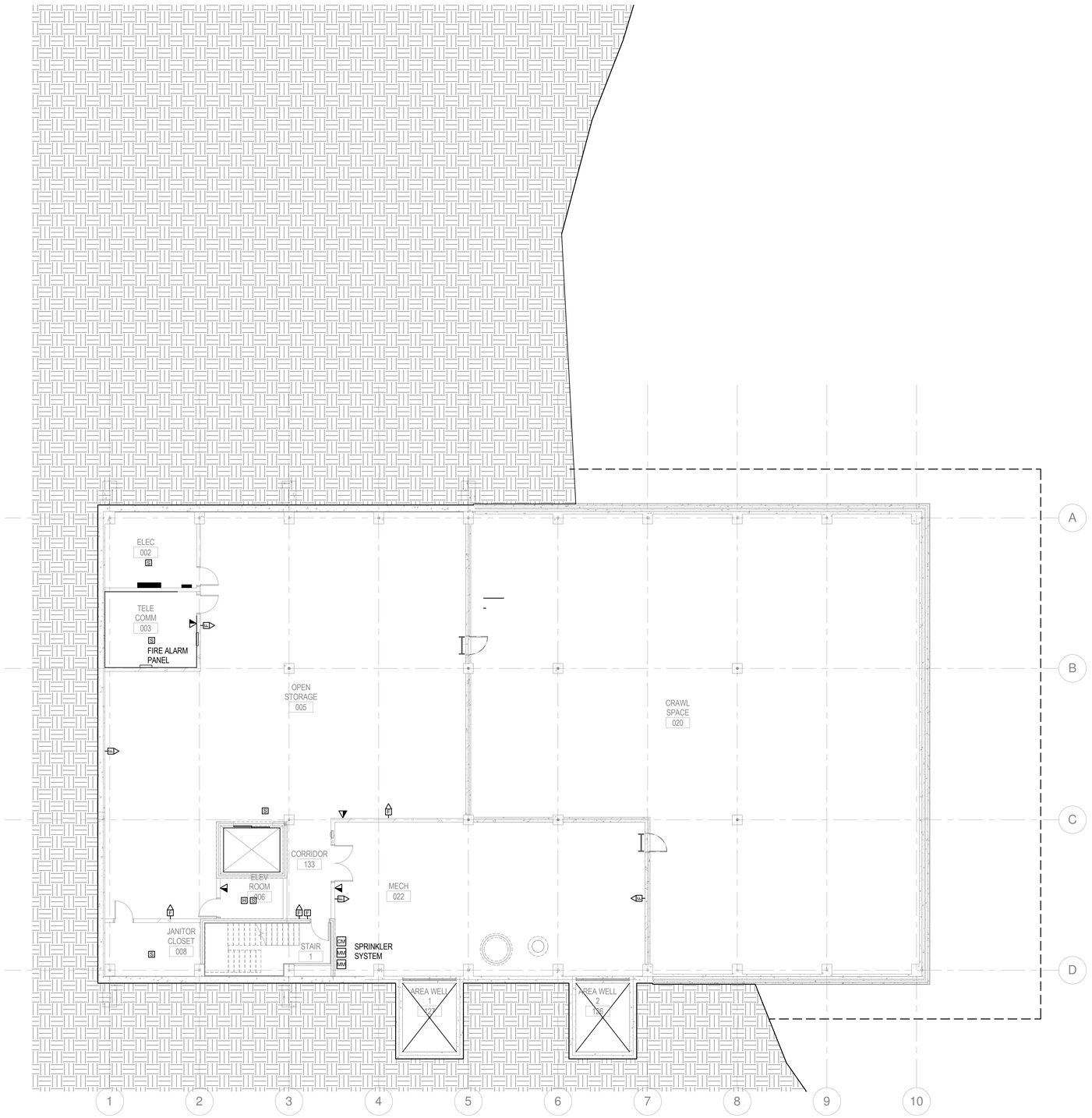

1 BASEMENT LEVEL SYSTEMS PLAN
1/8" = 1'-0"

GENERAL NOTES:

A. REFER TO MECHANICAL-ELECTRICAL COORDINATION SCHEDULE FOR ADDITIONAL MOTOR INFORMATION.

B. COORDINATE WITH MECHANICAL DRAWINGS AND ARCHITECTURAL LIFE SAFETY PLANS FOR LOCATIONS AND QUANTITIES OF FIRE SMOKE DAMPERS AND DAMPER OPERATORS.

C. COORDINATE DOOR HARDWARE REQUIREMENTS WITH ARCHITECTURAL DOOR HARDWARE SCHEDULE AND SPECIFICATION SECTION 087100.

D. REFER TO ARCHITECTURAL ELEVATIONS FOR ADDITIONAL MOUNTING INFORMATION OF DEVICES.

E. PROVIDE FIRE ALARM CONTROL MODULE FOR DAMPER CONTROL. DAMPERS SHALL CLOSE PER SMOKE COMPARTMENT ZONES. REFER TO LIFE SAFETY PLANS AND MECHANICAL PLAN FOR SMOKE COMPARTMENT ZONES. PROVIDE 120V EMERGENCY EQUIPMENT POWER CONNECTION TO EACH DAMPER. DAMPERS CAN BE COMBINED ON A DEDICATED CIRCUIT TO A MAXIMUM LOAD OF 10A AND A MAXIMUM QUANTITY OF SEVEN DAMPERS. REFER TO DAMPER MANUFACTURER FOR LOAD REQUIREMENTS. PROVIDE CIRCUIT BREAKER "LOCK-ON" IN PANEL.

F. MOUNT SMOKE DETECTORS AT LEAST 4" FROM WALL, 1' FROM ANY SPRINKLER, AND 3' FROM SUPPLY AIR DIFFUSERS.

G. COORDINATE DEVICE LOCATIONS AND ELEVATIONS AT ALL WORKSTATIONS WITH FINAL FURNITURE PLANS AND SHOP DRAWINGS PRIOR TO DEVICE ROUGH-IN.

H. ALL WALL PHONE LOCATION TO HAVE A MINIMUM WALL CLEARANCE AROUND DEVICE OF 9" IN WIDTH AND 11" IN HEIGHT.

I. MOUNT DATA JACKS/ROUGH-INS AT THE SAME ELEVATION AND WITHIN 12" OF THE ADJACENT POWER RECEPTACLE. COORDINATE LOCATIONS WITH POWER DRAWINGS.

J. ALIGN DEVICES VERTICALLY WHERE LIGHTING, POWER, AND SYSTEM DEVICES WITH DIFFERENT MOUNTING HEIGHTS ARE INDICATED CLOSE TO OTHER DEVICES.

K. PROVIDE DEDICATED CONDUIT FROM EACH FLOOR BOX DATA COMPARTMENT. ROUTE 1"C. OVER TO, AND UP INSIDE OF NEAREST WALL, TO CONCEALED ACCESSIBLE CEILING SPACE. PROVIDE BUSHINGS AND PULL STRING IN CONDUIT.

L. FOR DEVICE LOCATIONS SPECIFIED FOR ROUGH-IN, PROVIDE DOUBLE GANG J-BOX WITH SINGLE GANG MUD RING AND BLANK COVER PLATE. ROUTE 1"C. UP INTO CONCEALED ACCESSIBLE CEILING SPACE. PROVIDE BUSHINGS AND PULL STRING IN CONDUIT. CABLING, DEVICES AND TERMINATIONS ARE FURNISHED AND INSTALLED BY OWNER.

M. DEVICES INSTALLED IN 2X2 CEILING TILE SHALL BE CENTERED IN THE TILE. DEVICES INSTALLED IN 2X4 CEILING TILE SHALL BE CENTERED IN 2X2 PORTION OF 2X4 TILE.

N. PROVIDE CIRCUIT BREAKER "LOCK-ON" FOR FACP CIRCUIT(S).

O. FIRE ALARM SYSTEM IS AN EXTENSION OF THE EXISTING "CAMPUS" FIRE ALARM SYSTEM. PROVIDE ADDITIONAL EQUIPMENT TO EXTEND SYSTEM TO THIS AREA AS REQUIRED PER MANUFACTURER'S RECOMMENDATIONS.

P. ROUTE 1" CONDUIT FROM TEL/DATA BOX TO ACCESSIBLE CEILING ADJACENT TO NEAREST ACCESSIBLE CEILING FOR TELECOMMUNICATIONS PROVISIONS. TELECOMMUNICATIONS CABLING, FACEPLATES, INSTALLATION, AND TERMINATIONS ARE OWNER FURNISHED.

hga
333 East Erie Street
Milwaukee, Wisconsin 53202
Telephone 414.278.8200

ULINE
12575 Uline Drive
Pleasant Prairie, WI 53158

ULINE
SHIPPING SUPPLY SPECIALISTS

I HEREBY CERTIFY THAT THIS PLAN, SPECIFICATION OR REPORT WAS PREPARED BY ME OR UNDER MY DIRECT SUPERVISION AND THAT I AM A DULY LICENSED PROFESSIONAL ENGINEER UNDER THE LAWS OF THE STATE OF

NAME:
DATE: JULY 10, 2015
REGISTRATION NUMBER:

NO	DESCRIPTION	DATE
	CP-2	07/10/15

ISSUANCE HISTORY - THIS SHEET

HGA NO: 3595-001-00

BASEMENT LEVEL SYSTEMS PLAN OVERALL

DATE: May 8, 2015

CONSTRUCTION DOCUMENTS

E400

© COPYRIGHT HAMMEL, GREEN AND ABRAHAMSON, INC.

7/10/2015 8:12:09 AM C:\Users\jfisher\Documents\Revit Local Files\E15-Uline Electrical-3595001005_jfisher.rvt

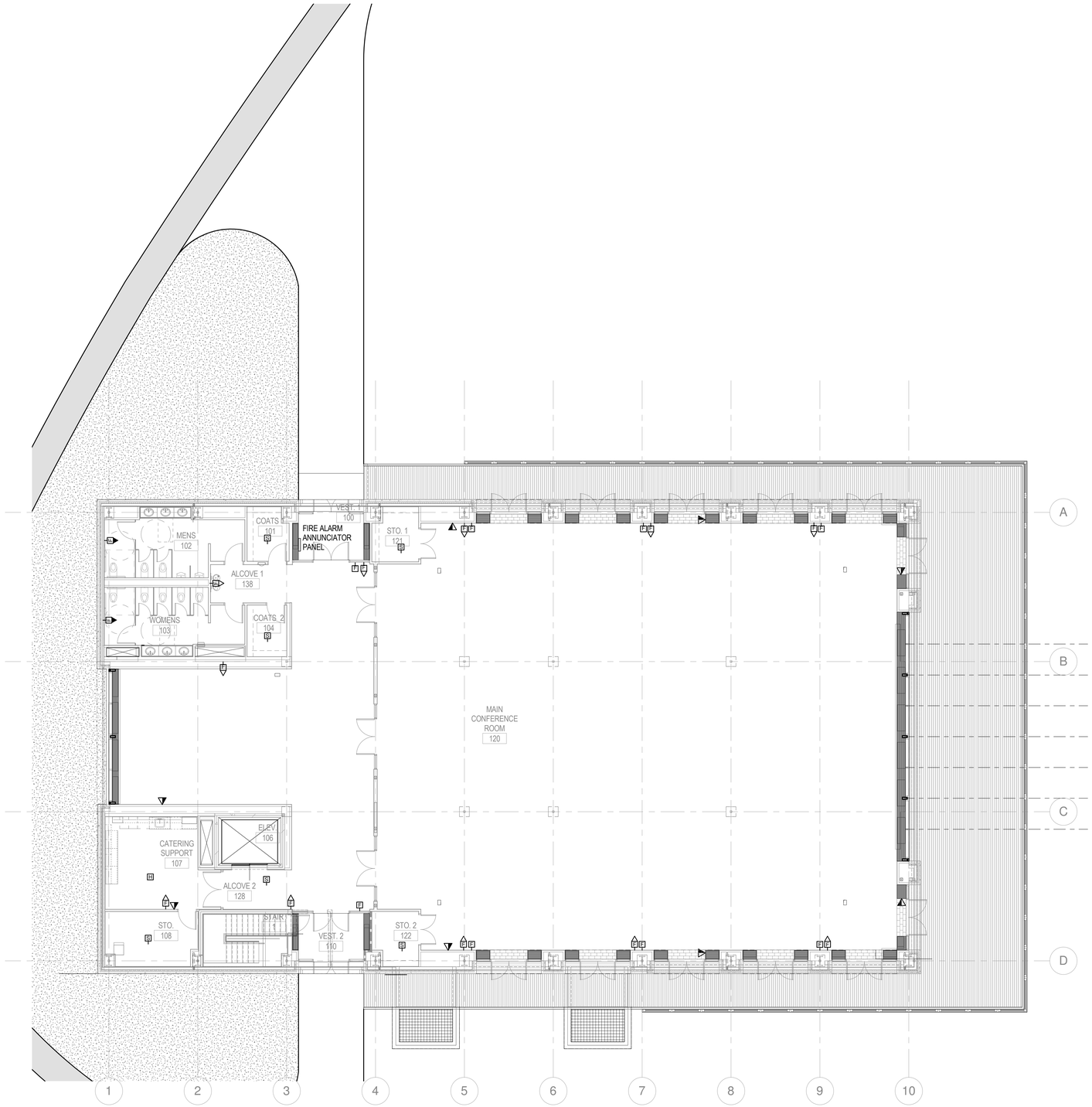

1 FIRST LEVEL SYSTEMS PLAN
1/8" = 1'-0"

GENERAL NOTES:

A. REFER TO MECHANICAL-ELECTRICAL COORDINATION SCHEDULE FOR ADDITIONAL MOTOR INFORMATION.

B. COORDINATE WITH MECHANICAL DRAWINGS AND ARCHITECTURAL LIFE SAFETY PLANS FOR LOCATIONS AND QUANTITIES OF FIRE SMOKE DAMPERS AND DAMPER OPERATORS.

C. COORDINATE DOOR HARDWARE REQUIREMENTS WITH ARCHITECTURAL DOOR HARDWARE SCHEDULE AND SPECIFICATION SECTION 087100.

D. REFER TO ARCHITECTURAL ELEVATIONS FOR ADDITIONAL MOUNTING INFORMATION OF DEVICES.

E. PROVIDE FIRE ALARM CONTROL MODULE FOR DAMPER CONTROL. DAMPERS SHALL CLOSE PER SMOKE COMPARTMENT ZONES. REFER TO LIFE SAFETY PLANS AND MECHANICAL PLAN FOR SMOKE COMPARTMENT ZONES. PROVIDE 120V EMERGENCY EQUIPMENT POWER CONNECTION TO EACH DAMPER. DAMPERS CAN BE COMBINED ON A DEDICATED CIRCUIT TO A MAXIMUM LOAD OF 10A AND A MAXIMUM QUANTITY OF SEVEN DAMPERS. REFER TO DAMPER MANUFACTURER FOR LOAD REQUIREMENTS. PROVIDE CIRCUIT BREAKER "LOCK-ON" IN PANEL.

F. MOUNT SMOKE DETECTORS AT LEAST 4" FROM WALL, 1' FROM ANY SPRINKLER, AND 3' FROM SUPPLY AIR DIFFUSERS.

G. COORDINATE DEVICE LOCATIONS AND ELEVATIONS AT ALL WORKSTATIONS WITH FINAL FURNITURE PLANS AND SHOP DRAWINGS PRIOR TO DEVICE ROUGH-IN.

H. ALL WALL PHONE LOCATION TO HAVE A MINIMUM WALL CLEARANCE AROUND DEVICE OF 9" IN WIDTH AND 11" IN HEIGHT.

I. MOUNT DATA JACKS/ROUGH-INS AT THE SAME ELEVATION AND WITHIN 12" OF THE ADJACENT POWER RECEPTACLE. COORDINATE LOCATIONS WITH POWER DRAWINGS.

J. ALIGN DEVICES VERTICALLY WHERE LIGHTING, POWER, AND SYSTEM DEVICES WITH DIFFERENT MOUNTING HEIGHTS ARE INDICATED CLOSE TO OTHER DEVICES.

K. PROVIDE DEDICATED CONDUIT FROM EACH FLOOR BOX DATA COMPARTMENT. ROUTE 1"C. OVER TO, AND UP INSIDE OF NEAREST WALL, TO CONCEALED ACCESSIBLE CEILING SPACE. PROVIDE BUSHINGS AND PULL STRING IN CONDUIT.

L. FOR DEVICE LOCATIONS SPECIFIED FOR ROUGH-IN, PROVIDE DOUBLE GANG J-BOX WITH SINGLE GANG MUD RING AND BLANK COVER PLATE. ROUTE 1"C. UP INTO CONCEALED ACCESSIBLE CEILING SPACE. PROVIDE BUSHINGS AND PULL STRING IN CONDUIT. CABLING, DEVICES AND TERMINATIONS ARE FURNISHED AND INSTALLED BY OWNER.

M. DEVICES INSTALLED IN 2X2 CEILING TILE SHALL BE CENTERED IN THE TILE. DEVICES INSTALLED IN 2X4 CEILING TILE SHALL BE CENTERED IN 2X2 PORTION OF 2X4 TILE.

N. PROVIDE CIRCUIT BREAKER "LOCK-ON" FOR FACP CIRCUIT(S).

O. FIRE ALARM SYSTEM IS AN EXTENSION OF THE EXISTING "CAMPUS" FIRE ALARM SYSTEM. PROVIDE ADDITIONAL EQUIPMENT TO EXTEND SYSTEM TO THIS AREA AS REQUIRED PER MANUFACTURER'S RECOMMENDATIONS.

P. ROUTE 1" CONDUIT FROM TEL/DATA BOX TO ACCESSIBLE CEILING ADJACENT TO NEAREST ACCESSIBLE CEILING FOR TELECOMMUNICATIONS PROVISIONS. TELECOMMUNICATIONS CABLING, FACEPLATES, INSTALLATION, AND TERMINATIONS ARE OWNER FURNISHED.

HGA
333 East Erie Street
Milwaukee, Wisconsin 53202
Telephone 414.278.8200

ULINE
12575 Uline Drive
Pleasant Prairie, WI 53158

ULINE
SHIPPING SUPPLY SPECIALISTS

I HEREBY CERTIFY THAT THIS PLAN, SPECIFICATION OR REPORT WAS PREPARED BY ME OR UNDER MY DIRECT SUPERVISION AND THAT I AM A DULY LICENSED PROFESSIONAL ENGINEER UNDER THE LAWS OF THE STATE OF

NAME:
DATE: JULY 10, 2015
REGISTRATION NUMBER:

NO	DESCRIPTION	DATE
	CP-2	07/10/15

ISSUANCE HISTORY - THIS SHEET

HGA NO: 3595-001-00

FIRST LEVEL SYSTEMS PLAN OVERALL

DATE: May 8, 2015

CONSTRUCTION DOCUMENTS

E401

© COPYRIGHT HAMMEL, GREEN AND ABRAHAMSON, INC.

7/10/2015 8:12:12 AM C:\Users\jfisher\Documents\Revit Local Files\E141-Uline Electrical-3595001-00_jfisher.rvt

LUMINAIRE SCHEDULE

TYPE	DESCRIPTION	MOUNTING	LENS/REFLECTOR	VOLTAGE	LAMP/LUMENS	BALLAST/POWER SUPPLY	WATTS	MANUFACTURER	CATALOG NUMBER	ALTERNATE MANUFACTURERS	NOTES	REVISION HISTORY
DL1	6" DIA ADJUSTABLE DOWNLIGHT WITH SOLITE LENS	RECESSED	CUSTOM TRIM COLOR, MATCH WOOD	120 V	LED W/ UNIT, 6000L, 3000K	INTEGRAL 0-10V ELDO 1% DIM	77 VA	PATHWAY	6SCALBV-6K-3K-B64-ELD-6SCA-L7	USAI		
DL2	6" DIA ADJUSTABLE DOWNLIGHT WITH SOLITE LENS	RECESSED	CUSTOM TRIM COLOR, MATCH WOOD	120 V	LED W/ UNIT, 5000L, 3000K	INTEGRAL 0-10V ELDO 1% DIM	63 VA	PATHWAY	6SCALBV-5K-3K-B64-ELD-6SCA-L7	USAI		
DL3	4" DIA DOWNLIGHT WITH SOLITE LENS	RECESSED		120 V	LED W/ UNIT, 1500L, 3000K	INTEGRAL 0-10V ELDO 1% DIM	21 VA	PATHWAY	4VLBV-15-3K-B38-ELD-4PLED-L7SCL	USAI		
DL4	2" DIA DOWNLIGHT WITH SOLITE LENS	RECESSED	CUSTOM TRIM COLOR, MATCH WOOD	120 V	LED W/ UNIT, 800L, 3000K	INTEGRAL 0-10V ELDO 1% DIM	12 VA	USAI	2024-B1-S-RAL*TBD-LRTD3-9012-CSD1-3000K-30-NC-DIML6B	SUBMIT FOR APPROVAL		
EBU	EMERGENCY BATTERY UNIT W/ SELF DIAGNOSTICS	SURFACE		120 V	(2) 1.5W LED HEADS W/ UNIT	INTEGRAL NI-CAD BATTERY	3 VA	LITHONIA	ELM2-LED-SD	ISOLITE, SURELITE	2	
EL1	SINGLE FACE EXIT SIGN - UNIVERSAL MOUNT	UNIVERSAL		120 V	LED W/ UNIT	INTEGRAL	5 VA	LITHONIA	TLE-1-R	ISOLITE	4	
EL2	DOUBLE FACE EXIT SIGN - UNIVERSAL MOUNT	UNIVERSAL		120 V	LED W/ UNIT	INTEGRAL	5 VA	LITHONIA	TLE-2-R	ISOLITE	4	
LF1	1X4 RECESSED LENSED TROFFER- FLANGED	RECESSED	A19/.156" ACRYLIC LENS	120 V	(2) F032/830/SPX/ECO	HI EFF PROG START, .88BF	57 VA	LITHONIA	SP8-F232-A19-PAF	METALUX, DAYBRITE		
LF2	2X4 LENSED FLUORESCENT TROFFER - FLANGED	RECESSED	A19/.156" ACRYLIC LENS	120 V	(3) F032/830/SPX/ECO	(2) HI EFF PROG START, .88BF	87 VA	LITHONIA	2SP8-F332-A19-PAF	METALUX, DAYBRITE		
LF3	4' LONG WRAPAROUND	SURFACE WALL/CEILING	CLEAR PRISMATIC IMPACT ACRYLIC	120 V	(2) F032/830/SPX/ECO	HI EFF PROG START, .88BF	57 VA	KENALL	R548-2-32-RS-1-DV	METALUX, DAYBRITE	5	
MF1	8' LONG LINEAR RECESSED CONTINUOUS PERIMETER FIXTURE	RECESSED	SPECULAR PARABOLIC LOUVER	120 V	F032/830/SPX/ECO3 - (1) PER 4'	HI EFF PROG START, .88BF	57 VA	FOCAL POINT	FW2-PL-2T8-1C-S-RC-SS-WH-8	PRUDENTIAL	3	
MF2	17' LONG LINEAR RECESSED CONTINUOUS PERIMETER FIXTURE	RECESSED	SPECULAR PARABOLIC LOUVER	120 V	F032/830/SPX/ECO3 - (1) PER 4'	HI EFF PROG START, .88BF	120 VA	FOCAL POINT	FW2-PL-1T8-1C-S-RC-SS-WH-8	PRUDENTIAL	3	
ML1	LED FLOOD FIXTURE, CUSTOM COLOR	SURFACE COVE	GLASS LENS	120 V	LED W/ UNIT, 3000L, 2700K	INTEGRAL 0-10V ELDO 1% DIM	56 VA	INSIGHT	DRV-50-27K-30-TR-IDIM-1-CC			
ML2	LED FLOOD FIXTURE, CUSTOM COLOR	SURFACE COVE	GLASS LENS	120 V	LED W/ UNIT, 2100LI, 2700K	INTEGRAL 0-10V ELDO 1% DIM	37 VA	INSIGHT	DRV-30-27K-45-TR-IDIM-1-CC			
ML3	8' LONG X 4" WIDE LINEAR RECESSED WET LOCATION, CUSTOM COLOR	RECESSED	SATIN LENS	120 V	LED W/ UNIT, 250L/FT, 3000K	INTEGRAL 0-10V 10% DIM	35 VA	AXIS	WBRLED-B3-MF-250-30-S-8-C-120-D-1-C	SUBMIT FOR APPROVAL		
NF1	4' FLUORESCENT INDUSTRIAL W/ WIREGUARD	SURFACE/CHAIN		120 V	(2) F032/830/SPX/ECO	HI EFF PROG START, .88BF	57 VA	LITHONIA	EJS-232	METALUX, DAYBRITE		
NF2	4' LOW PROFILE STRIP WITH WIREGUARD	SURFACE		120 V	F032/830/SPX/ECO	HI EFF PROG START, .88BF	29 VA	LITHONIA	Z-132-WGZ48	METALUX, DAYBRITE		
W1	DECORATIVE WALL SCONCE	SURFACE	3 PLY CRYSTAL GLASS	120 V	LED W/ UNIT, 3000K	INTEGRAL 0-10V 10% DIM	17 VA	BEGA	3444LED-BL		1	
W2	RECESSED LED STEP LIGHT - STAINLESS STEEL	RECESSED		120 V	LED W UNIT, 36L, 3000K	INTEGRAL, NON DIMMING	4 VA	WAC	WL-LED200-C-SS	WINONA	1	

GENERAL NOTES:

A. REFER TO DIVISION 26 SPECIFICATIONS FOR ADDITIONAL INFORMATION BEFORE ORDERING.
B. ALL LED LUMINAIRES MUST COMPLY WITH LM-79 AND LM-80 TESTING STANDARDS. L70 LIFE SHALL HAVE A MINIMUM OF 50,000 HOURS.
C. ANY PROPOSED SUBSTITUTIONS MUST BE SUBMITTED WITH PHYSICAL SAMPLE, PHOTOMETRIC CALCULATIONS, AND CUTSHEETS WITH DATA TO PROVE EQUAL CHARACTERISTICS.

ALLOWANCE NOTES:

A1. MAXIMUM ALLOWANCE PRICE OF $11,000 PER LUMINAIRE. DOES NOT INCLUDE FREIGHT, TAXES, CONTRACTOR MARKUP OR INSTALLATION COSTS.

NOTES:

1. UL LISTED FOR WET LOCATION.
2. WIRE EBU "HOT" TO UNSWITCHED NORMAL POWER CIRCUIT IN ROOM.
3. PROVIDE WALL TO WALL INSTALLATION. FIELD VERIFY LENGTH PRIOR TO ORDERING.
4. COORDINATE CHEVRONS WITH PLANS PRIOR TO ORDERING
5. FIXTURE PROVIDED SHALL BE LESS THAN 4" DEEP. ANY MANUFACTURER EQUAL FIXTURES MUST BE LESS THAN 4" DEEP AND MEET OR EXCEED PHOTOMETRIC PERFORMANCE TO BE ACCEPTED. IF FIXTURES CANNOT BE INSTALLED WHERE INDICATED ON PLAN, EC MAY BE REQUIRED TO ADD ADDITIONAL FIXTURES TO MEET CODE REQUIRED 10FC MINIMUM AT PIT FLOOR.

MOTOR WIRING SCHEDULE

TAG	EQUIPMENT	LOCATION	ELECTRICAL INFORMATION: HP	FLA	MCA	VA	VOLTAGE	NUMBER OF POLES	LOAD	PANEL	CIRCUIT #	STARTER TYPE	FUSED DISCONNECT FURNISHED	STARTER RESPONSIBILITY: FURNISHED	INSTALLED	WIRED
MOTOR																
AHU-1	AIR HANDLING UNIT	MECH 022	21	65.3		15666	480 V	3	15666 VA	MDP	9		EC	MC	EC	EC
AHU-2	AIR HANDLING UNIT	OPEN STORAGE 005	1/4			186.5	480 V	3	187 VA	MDP	4		EC	MC	EC	EC
AHU-3	AIR HANDLING UNIT	MECH 022	1/4			186.5	480 V	3	187 VA	MDP	6		EC	MC	EC	EC
CP-1	CIRCULATOR	MECH 022	1/4	5.8		186.5	120 V	1	187 VA	PANEL LA	10		EC	EC	EC	EC
CUH-1	CABINET UNIT HEATER	STAIR 1	1/4	5.8		186.5	120 V	1	145 VA	PANEL LA	7		EC	MC	EC	EC
CWP-5	CHILLED WATER PUMP	CUP	7-1/2	11		5595	480 V	3	5595 VA	DP/YX	1,3,5		EC	MC	EC	EC
EF-1	EXHAUST FAN	MECH 022	1-1/2	3		1119	480 V	3	1119 VA	MDP	7		EC	MC	EC	EC
EF-2	EXHAUST FAN	OPEN STORAGE 005	3/4	1.6		559.5	480 V	3	560 VA	MDP	2		EC	MC	EC	EC
EF-3	EXHAUST FAN	MECH 022				50	120 V	1	50 VA	PANEL LA	9		EC	MC	EC	EC
EH-1	ELECTRIC HEATER	MECH 022					208 V	3	56 VA	LDP	3		EC	MC	EC	EC
ELEVATOR	ELEVATOR	ELEV ROOM 006	10			7460	480 V	3	7450 VA	MDP	10		EC	VENDOR	EC	EC
EP-1	SUMP PUMP	ELEVATOR PIT	1/4	5.8		186.5	120 V	1	187 VA	PANEL LA	6		EC	PC	EC	EC
FC-1		ELEC 002	1/2	1.1		373	480 V	3	373 VA	MDP	1		EC	MC	EC	EC
FC-2		TELE COMM 003	1/2	1.1		373	480 V	3	373 VA	MDP	3		EC	MC	EC	EC
H-1	HUDMIDIFIER	MECH 022	66			49236	480 V	3	49500 VA	MDP	12		EC	MC	EC	EC
PA	PREACTION ASSEMBLY	MECH 022	1/4			186.5	480 V	3	187 VA	MDP	5		EC	MC	EC	EC
RF-1	RELIEF FAN	MECH 022	10	14		7460	480 V	3	7460 VA	MDP	8		EC	MC	EC	EC
RO	RO SYSTEM	MECH 022	1/3			223.8	120 V	1	0 VA	PANEL LA	42		EC	EC	EC	EC
SE-1	SEWER EJECTOR PUMP	MECH 022	(2) 1-1/2			2238	480 V	3	0 VA	MDP	16		EC	EC	EC	EC
SF-1	SUPPLY FAN	MECH 022	21	65.3		15666	480 V	3	56 VA	MDP	15		EC	MC	EC	EC
SF-2	SUPPLY FAN	OPEN STORAGE 005	1/4			186.5	480 V	3	56 VA	MDP	13		EC	MC	EC	EC
SF-3	SUPPLY FAN	MECH 022	1/4			186.5	480 V	3	56 VA	MDP	14		EC	MC	EC	EC
SP-1	STORM PUMP	MECH 022	1/3			223.8	120 V	1	0 VA	PANEL LA	40		EC	EC	EC	EC
UH-1	UNIT HEATER	MECH 022			1.5	180	120 V	1	25 VA	PANEL LA	8		EC	MC	EC	EC
SPO																
B-1	BOILER	MECH 022					120 V	1	180 VA	PANEL LA	17					
B-2	BOILER	MECH 022					120 V	1	180 VA	PANEL LA	18					
CP-1	BOILER/CHILLER PLANT	CUP					480 V	3	96000 VA	DP/YX	2,4,6					
FAN	FAN	VESTIBULE 1 100					120 V	1	180 VA	PANEL LA	37					
FP	FIRE ALARM PANEL	TELE COMM 003					120 V	1	180 VA	PANEL LA	33					
GWH-1	GAS WATER HEATER	MECH 022					120 V	1	180 VA	PANEL LA	16					
MS-1	MECCO-SHADE	MAIN CONFERENCE ROOM 120					120 V	1	180 VA	PANEL LA	28					
MS-2	MECCO -SHADE	MAIN CONFERENCE ROOM 120					120 V	1	180 VA	PANEL LA	29					

HGA
333 East Erie Street
Milwaukee, Wisconsin 53202
Telephone 414.278.8200

ULINE
12575 Uline Drive
Pleasant Prairie, WI 53158

ULINE
SHIPPING SUPPLY SPECIALISTS

I HEREBY CERTIFY THAT THIS PLAN, SPECIFICATION OR REPORT WAS PREPARED BY ME OR UNDER MY DIRECT SUPERVISION AND THAT I AM A DULY LICENSED PROFESSIONAL ENGINEER UNDER THE LAWS OF THE STATE OF

NAME:
DATE: JULY 10, 2015
REGISTRATION NUMBER:

NO	DESCRIPTION	DATE
	CP-2	07/10/15

ISSUANCE HISTORY - THIS SHEET

HGA NO: 3595-001-00

ELECTRICAL SCHEDULE

DATE: May 8, 2015

CONSTRUCTION DOCUMENTS

E500

© COPYRIGHT HAMMEL, GREEN AND ABRAHAMSON, INC.

7/10/2015 8:12:14 AM C:\Users\jfischer\Documents\Revit Local Files\F15-Uline Electrical_359500100_jfischer.rvt

120/208 Wye, 3 PHASE, 4 WIRE, 100 A

PANEL LA

MOUNTING - SURFACE
MLO

PANEL LOCATION: ELEC 002

14K AIC RATING

Descriptions	Amps	Poles	CCT	A		B		C		CCT	Poles	Amps	Descriptions
LL Lighting	20 A	1	1	862 VA	1425 VA					2	1	20 A	LL Lighting
ELEVATOR SHAFT	20 A	1	3			114 VA	68 VA			4	1	20 A	01 Ltg
MAIN LEVEL LIGHTING	20 A	1	5					1146 VA	187 VA	6	1	20 A	SP-1
CUH-1	20 A	1	7	145 VA	25 VA					8	1	20 A	UH-1
EF-3	20 A	1	9			50 VA	187 VA			10	1	20 A	CP-1
ELECT & TELE COMM RECEPT	20 A	1	11					720 VA	0 VA	12	1	20 A	TELE COMM J-BOX
OPEN STORAGE RECEPT	20 A	1	13	900 VA	540 VA					14	1	20 A	ELEV ROOM & JANITOR CLOSET RECEPT
CRAWL SPACE & MECH RECEPT	20 A	1	15			720 VA	180 VA			16	1	20 A	GWH-1
B-2	20 A	1	17					180 VA	180 VA	18	1	20 A	B-1
MENS, WOMENS & COAT ROOM RECEPT	20 A	1	19	1080 VA	1080 VA					20	1	20 A	LOUNGE, LOUNGE 1 & 2
CATERING SUPPORT RECEPT	20 A	1	21			180 VA	180 VA			22	1	20 A	AUTO DOOR
AUTO DOOR	20 A	1	23					180 VA	1080 VA	24	1	20 A	STORAGE 2, MAIN CONF. ROOM & VESTIBULE 2
MANI CONFERENCE ROOM	20 A	1	25	900 VA	900 VA					26	1	20 A	MAIN CONFERENCE ROOM
MAIN CONFERENCE ROOM	20 A	1	27			900 VA	180 VA			28	1	20 A	MS-1
MS-2	20 A	1	29					180 VA	900 VA	30	1	20 A	MAIN CONFERENCE ROOM
STORAGE 1, MAIN CONF. ROOM & VESTIBULE 1	20 A	1	31	900 VA	420 VA					32	1	20 A	01 Ltg
FP	20 A	1	33			180 VA	180 VA			34	1	20 A	CATERING SUPPORT RECEPT
CATERING SUPPORT RECEPT	20 A	1	35					180 VA	180 VA	36	1	20 A	CATERING SUPPORT RECEPT
FAN	20 A	1	37	180 VA	180 VA					38	1	20 A	CATERING SUPPORT DISHWASHER
FLOOR BOXES	20 A	1	39			720 VA	0 VA			40	1	20 A	SP-1
FLOOR BOXES	20 A	1	41					720 VA	0 VA	42	1	20 A	RO
SPARE	20 A	1	43	0 VA	0 VA					44	1	20 A	SPARE
SPARE	20 A	1	45			0 VA	0 VA			46	1	20 A	SPARE
SPARE	20 A	1	47					0 VA	0 VA	48	1	20 A	SPARE
SPARE	20 A	1	49	0 VA	0 VA					50	1	20 A	SPARE
SPARE	20 A	1	51			0 VA	0 VA			52	1	20 A	SPARE
SPARE	20 A	1	53					0 VA	0 VA	54	1	20 A	SPARE
SPARE	20 A	1	55	0 VA	0 VA					56	1	20 A	SPARE
SPARE	20 A	1	57			0 VA	0 VA			58	1	20 A	SPARE
SPARE	20 A	1	59					0 VA	0 VA	60	1	20 A	SPARE
SPARE	20 A	1	61	0 VA	0 VA					62	1	20 A	SPARE
SPARE	20 A	1	63			0 VA	0 VA			64	1	20 A	SPARE
SPARE	20 A	1	65					0 VA	0 VA	66	1	20 A	SPARE
SPARE	20 A	1	67	0 VA	0 VA					68	1	20 A	SPARE
SPARE	20 A	1	69			0 VA	0 VA			70	1	20 A	SPARE
SPARE	20 A	1	71					0 VA	0 VA	72	1	20 A	SPARE
SPARE	20 A	1	73	0 VA	0 VA					74	1	20 A	SPARE
SPARE	20 A	1	75			0 VA	0 VA			76	1	20 A	SPARE
SPARE	20 A	1	77					0 VA	0 VA	78	1	20 A	SPARE
SPARE	20 A	1	79	0 VA	0 VA					80	1	20 A	SPARE
SPARE	20 A	1	81			0 VA	0 VA			82	1	20 A	SPARE
SPARE	20 A	1	83					0 VA	0 VA	84	1	20 A	SPARE
				Phase A		Phase B		Phase C					
				9537 VA		3839 VA		5833 VA					

Branch Panel: I-LA

Location: ELEC 002
Supply From:
Mounting: Surface
Enclosure:

Volts: 120/208 S
A.I.C. Rating: 14K
Main Type:
Mains Rating: 100 A
MCB Rating:

CKT	Circuit Description	Poles	A	B
1	Basement - Non essential EM	1	628 VA	
2	Exit Signs	1		45 VA
3	Vestibule Downlights	1	84 VA	
4	Toilet Downlights	1		126 VA
5	Exterior Egress lighting	1	70 VA	
6	Exterior Step Lighting	1		188 VA
7	Basement Storage lighting	1	513 VA	
8				
		Total Load:	1296 VA	359 VA
		Total Amps:	11 A	3 A

Panelboard Notes:
Legend:

Notes:

480/277 Wye, 3 PHASE, 4 WIRE, 100 A

DP/YX

MOUNTING - SURFACE
MLO

PANEL LOCATION: CRAWL SPACE 020

EXISTING

Descriptions	Amps	Poles	CCT	A		B		C		CCT	Poles	Amps	Descriptions
			1	1865 VA	32000 VA					2			
CWP-5	20 A	3	3			1865 VA	32000...			4	3	175 A	CP-1
			5					1865 VA	32000...	6			
			7							8			
			9							10			
			11							12			
			13							14			
			15							16			
			17							18			
			19							20			
			21							22			
			23							24			
			25							26			
			27							28			
			29							30			
			31							32			
			33							34			
			35							36			
			37							38			
			39							40			
			41							42			
				Phase A		Phase B		Phase C					
				33865 VA		33865 VA		33865 VA					

Panelboard Notes:

hga.
333 East Erie Street
Milwaukee, Wisconsin 53202
Telephone 414.278.8200

ULINE
12575 Uline Drive
Pleasant Prairie, WI 53158

ULINE
SHIPPING SUPPLY SPECIALISTS

I HEREBY CERTIFY THAT THIS PLAN, SPECIFICATION OR REPORT WAS PREPARED BY ME OR UNDER MY DIRECT SUPERVISION AND THAT I AM A DULY LICENSED PROFESSIONAL ENGINEER UNDER THE LAWS OF THE STATE OF

NAME:
DATE: JULY 10, 2015
REGISTRATION NUMBER:

NO	DESCRIPTION	DATE
	CP-2	07/10/15

ISSUANCE HISTORY - THIS SHEET

HGA NO: 3595-001-00

ELECTRICAL SCHEDULES

DATE: May 8, 2015

CONSTRUCTION DOCUMENTS

E501

© COPYRIGHT HAMMEL, GREEN AND ABRAHAMSON, INC.

7/10/2015 8:12:16 AM C:\Users\jfichera\Documents\Revit Local Files\F15 Uline Electrical-359500100_jfichera.rvt

LCP-1							
					LOW VOLTAGE		
RELAY	VOLTAGE	PANEL	CIRCUIT NUMBER	LOAD LOCATION (ROOM NAME AND NUMBER)	AUTOMATIC CONTROL	OVERRIDE CONTROL	NOTES
R1	120 V	PANEL LA	4	EXTERIOR SCONCE	P1		
R2	120 V	I-LA	6	EXTERIOR STEP LIGHT	P1		
R3	120 V	PANEL LA	32	EXTERIOR LINEAR	P1		1
R4	120 V	PANEL LA	5	CATERING RM 100	T1	ROOM SWITCH	
R5	120 V	PANEL LA	5	CATERING RM 100	T1	ROOM SWITCH	
R6	120 V	PANEL LA	5	STORGE RM 118	T1	ROOM SWITCH	
R7	120 V	PANEL LA	5	WOMENS RM 101	T1	ROOM SWITCH	1
R8	120 V	PANEL LA	5	MENS RM 102	T1	ROOM SWITCH	1
R9	120 V	PANEL LA	5	COAT RM 104	T1	ROOM SWITCH	
R10	120 V	PANEL LA	5	COAT RM 103	T1	ROOM SWITCH	
R11	120 V	PANEL LA	1	CRAWL SPACE 117	T1	ROOM SWITCH	
R12	120 V	PANEL LA	2	OPEN STORAGE RM 112	T1	ROOM SWITCH	

RELAY SCHEDULE GENERAL NOTES:

A. PROVIDE BARRIERS OR INDIVIDUAL PANELS AS NECESSARY TO SEPARATE VOLTAGES, NORMAL, ESSENTIAL AND LIFE SAFETY POWER.
B. PROVIDE NETWORKED PANELS WITH CAPACITY FOR 20% SPARE RELAYS FOR FUTURE EXPANSION
C. ALL TIMECLOCK SETTINGS MUST BE CONFIRMED WITH OWNER PRIOR TO ENGAGING FACTORY PROGRAMMING.
D. SUBMIT SHOP DRAWINGS WITH SCHEDULE, ENGRAVINGS, AND NUMBER OF BUTTONS PER SWITCH.

RELAY SCHEDULE KEY NOTES:

1. THIS RELAY CONTROL CIRCUIT CONTAINS LIGHTING THAT IS ON A LIFE SAFETY AND/OR ESSENTIAL POWER CIRCUIT THAT IS WIRED USING AN EPT (EMERGENCY POWER TRANSFER) DEVICE. INTENT IS FOR ALL LIGHTING TO BE SWITCHED TOGETHER WITH NORMAL LIGHTING UNDER NON-EMERGENCY CIRCUMSTANCES. NOTE THAT EMERGENCY CIRCUIT SHALL NOT BE WIRED THRU RELAY CABINET AND RELAY NUMBER IS SHOWN ON PLANS FOR SWITCHING INTENT ONLY. SEE MANUFACTURERS WIRING DIAGRAMS FOR ADDITIONAL INFORMATION.

LOW VOLTAGE CONTROL TYPES:

ALL TIMECLOCK SETTINGS MUST BE CONFIRMED WITH OWNER PRIOR TO ENGAGING FACTORY PROGRAMMING.

T1 - TIMECLOCK SCHEDULE 1 - MANUAL ON / (OFF) 10:00PM
T2 - PHOTOSENSOR EXTERIOR ON / (OFF) 12:00AM

P1 - PHOTOSENSOR EXTERIOR - DUSK TO DAWN

LIGHTING CONTROL PERFORMANCE DESCRIPTIONS:

OCCUPANCY SENSOR - IN AREAS WHERE OCCUPANCY SENSORS ARE SHOWN THE SENSOR SHALL DETECT WHEN NO OCCUPANT IS PRESENT FOR 20 MINUTES AND SWITCH OFF THE LIGHTS. LIGHTING SHALL DEFAULT TO STATE AT WHICH THE ROOM WAS LEFT UPON REENTRY OF THE OCCUPANT. MANUAL OVERRIDE VIA WALL SWITCH OR PUSH BUTTON SHALL BE PROVIDED.

DAYLIGHT HARVESTING/ROOM PHOTOCELL - WHEN THE PHOTOSENSOR DETECTS THE TARGET ILLUMINANCE VALUE AT THE DESIGNATED WORK PLANE IT SHALL SIGNAL TO SWITCH OFF THE CORRESPONDING LIGHT FIXTURES TO MAINTAIN THE TARGET ILLUMINANCE OF 35FC MINIMUM AT THE 30"AFF. SENSOR CALIBRATION AND DEAD BAND SETTINGS SHOULD BE PROGRAMMED AFTER ALL FURNITURE AND FINISHES ARE INSTALLED.

LOW VOLTAGE OVERRIDE - THE ASTRONOMICAL TIMECLOCK WILL BE SET FOR EACH CORRESPONDING RELAY. WHEN THE TIME PERIOD EXPIRES FOR THAT RELAY, A FLICK WARNING SHOULD BE ACTIVATED FOR THAT AREA. USERS IN THE SPACE WILL HAVE 10 MINUTES TO ACTIVATE THE LOCAL LOW VOLTAGE OVERRIDE SWITCH. UPON ACTIVATION, THE USER WILL HAVE 1 HOUR UNTIL THE ACTIVATION SEQUENCE BEGINS AGAIN.

Dimmer Panel LD

MOUNTING:	Surface	**NOTES:**	120/208 Wye
MAIN CCT. BKR.		**FED FROM:**	LDP
PHASE	3	**LOCATION:**	ELEC 002
WIRE	4		

ROOM DESCRIPTION	Load Name	CIRCUIT NO.	FIX. TYPE	ZONE	BKR SIZE	Load	LOAD TYPE
MAIN CONFERENCE ROOM 120	DOWNLTS STAGE S	1	DL1	C1	20 A	154 VA	LED - 1% DIM
MAIN CONFERENCE ROOM 120	DOWNLTS STAGE S	2	DL1	C2	20 A	154 VA	LED - 1% DIM
MAIN CONFERENCE ROOM 120	DOWNLTS CENTER S	3	DL1	C3	20 A	154 VA	LED - 1% DIM
MAIN CONFERENCE ROOM 120	DOWNLTS CENTER S	4	DL1	C4	20 A	154 VA	LED - 1% DIM
MAIN CONFERENCE ROOM 120	DOWNLTS CENTER S	5	DL1	C5	20 A	154 VA	LED - 1% DIM
MAIN CONFERENCE ROOM 120	DOWNLTS CENTER S	6	DL1	C6	20 A	231 VA	LED - 1% DIM
MAIN CONFERENCE ROOM 120	DOWNLTS SIDE S	7	DL1 & DL2	C7	20 A	140 VA	LED - 1% DIM
MAIN CONFERENCE ROOM 120	DOWNLTS SIDE S	8	DL1 & DL2	C8	20 A	140 VA	LED - 1% DIM
MAIN CONFERENCE ROOM 120	DOWNLTS SIDE S	9	DL1 & DL2	C9	20 A	140 VA	LED - 1% DIM
MAIN CONFERENCE ROOM 120	DOWNLTS SIDE S	10	DL1 & DL2	C10	20 A	140 VA	LED - 1% DIM
MAIN CONFERENCE ROOM 120	DOWNLTS SIDE S	11	DL1 & DL2	C11	20 A	140 VA	LED - 1% DIM
MAIN CONFERENCE ROOM 120	DOWNLTS STAGE N	12	DL1	C12	20 A	154 VA	LED - 1% DIM
MAIN CONFERENCE ROOM 120	DOWNLTS STAGE N	13	DL1	C13	20 A	154 VA	LED - 1% DIM
MAIN CONFERENCE ROOM 120	DOWNLTS CENTER N	14	DL1	C14	20 A	154 VA	LED - 1% DIM
MAIN CONFERENCE ROOM 120	DOWNLTS CENTER N	15	DL1	C15	20 A	154 VA	LED - 1% DIM
MAIN CONFERENCE ROOM 120	DOWNLTS CENTER N	16	DL1	C16	20 A	154 VA	LED - 1% DIM
MAIN CONFERENCE ROOM 120	DOWNLTS CENTER N	17	DL1	C17	20 A	231 VA	LED - 1% DIM
MAIN CONFERENCE ROOM 120	DOWNLTS SIDE N	18	DL1 & DL2	C18	20 A	140 VA	LED - 1% DIM
MAIN CONFERENCE ROOM 120	DOWNLTS SIDE N	19	DL1 & DL2	C19	20 A	140 VA	LED - 1% DIM
MAIN CONFERENCE ROOM 120	DOWNLTS SIDE N	20	DL1 & DL2	C20	20 A	140 VA	LED - 1% DIM
MAIN CONFERENCE ROOM 120	DOWNLTS SIDE N	21	DL1 & DL2	C21	20 A	140 VA	LED - 1% DIM
MAIN CONFERENCE ROOM 120	DOWNLTS SIDE N	22	DL1 & DL2	C22	20 A	140 VA	LED - 1% DIM
LOUNGE 105	DOWNLTS WALKWAY	23	DL1	L1	20 A	462 VA	LED - 1% DIM
LOUNGE 105	DOWNLTS LOUNGE	24	DL1	L2	20 A	308 VA	LED - 1% DIM
MAIN CONFERENCE ROOM 120	UPLIGHTS S - EM	25	ML1	C23	20 A	616 VA	LED - 1% DIM - EMERG
MAIN CONFERENCE ROOM 120	UPLIGHTS S	26	ML1	C24	20 A	280 VA	LED - 1% DIM
MAIN CONFERENCE ROOM 120	UPLIGHTS ENTRY - EM	27	ML2	C25	20 A	56 VA	LED - 1% DIM - EMERG
MAIN CONFERENCE ROOM 120	UPLIGHTS N - EM	28	ML1	C26	20 A	616 VA	LED - 1% DIM - EMERG
MAIN CONFERENCE ROOM 120	UPLIGHTS N	29	ML1	C27	20 A	280 VA	LED - 1% DIM
MAIN CONFERENCE ROOM 120	UPLIGHTS ENTRY - EM	30	ML2	C28	20 A	56 VA	LED - 1% DIM - EMERG
LOUNGE 105	UPLIGHTS WALKWAY	31	ML2	L3	20 A	224 VA	LED - 1% DIM - EMERG
LOUNGE 105	UPLIGHTS LOUNGE	32	ML2	L4	20 A	296 VA	LED - 1% DIM - EMERG
ALCOVE 128, ALCOVE 138	LOBBY ALCOVES	33	DL3	L5	20 A	255 VA	LED - 1% DIM - EMERG
MAIN CONFERENCE ROOM 120	VESTIBULE DOWNLIGHTS S	34	DL4	C29	20 A	120 VA	LED - 1% DIM - EMERG
MAIN CONFERENCE ROOM 120	VESTIBULE DOWNLIGHTS N	35	DL4	C30	20 A	120 VA	LED - 1% DIM - EMERG
MAIN CONFERENCE ROOM 120	STAGE LIGHTING	36	ML3	C31	20 A	35 VA	LED - 1% DIM
MAIN CONFERENCE ROOM 120	STAGE LIGHTING	37	ML3	C32	20 A	35 VA	LED - 1% DIM
MAIN CONFERENCE ROOM 120	STAGE LIGHTING	38	ML3	C33	20 A	35 VA	LED - 1% DIM
MAIN CONFERENCE ROOM 120	STAGE LIGHTING	39	ML3	C34	20 A	35 VA	LED - 1% DIM
		40					
		41					
		42					
		43					
		44					
		45					
		46					
		47					
		48					

Load Classification	Connected Load	Demand Factor	Estimated Demand	Panel Totals	
Lighting	0 VA	0.00%	0 VA	**Total Conn. Load:**	7231 VA
Notes:					

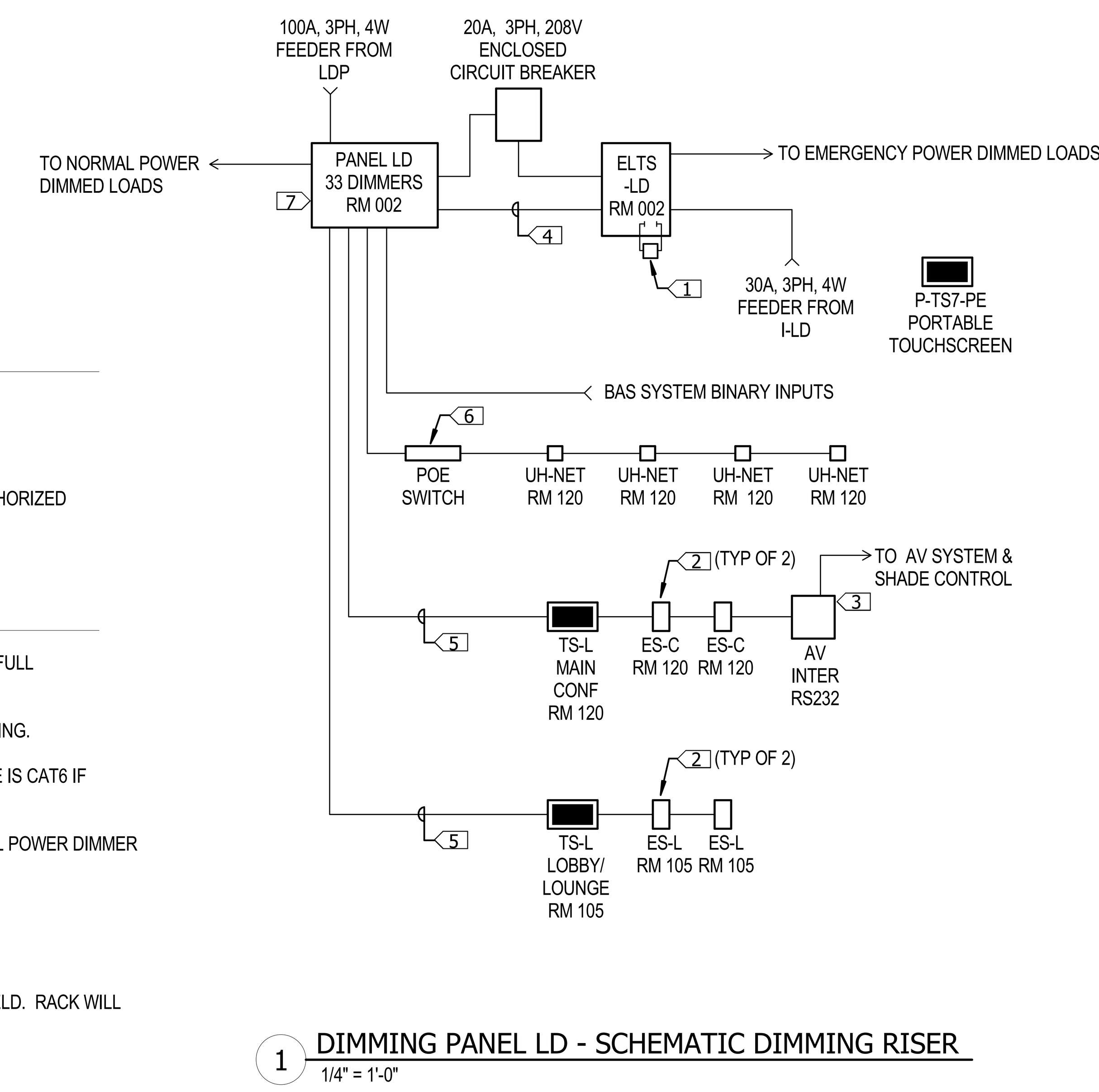

1 DIMMING PANEL LD - SCHEMATIC DIMMING RISER
1/4" = 1'-0"

DIMMING SCHEMATIC RISER GENERAL NOTES:

A. ALL LOW VOLTAGE CONTROL WIRING SHALL BE INSTALLED IN CONDUIT
B. EXACT NUMBER OF RS232 INTERFACES SHALL BE DETERMINED BY DIMMING SYSTEM MANUFACTURER.
C. COORDINATE INTEGRATION TO AV SYSEM VIA NETWORK OR RS232. COORDINATE WITH AV AND LIGHTING CONTRACTOR PRIOR TO PRODUCT RELEASE.
D. ALL COMMUNICATIONS CABLING SHALL BE INSTALLED IN CONDUIT.
E. EC IS RESPONSIBLE FOR INSTALLATION OF ALL CAT6 CONTROL WIRING AS INDICATED ON SCHEMATIC RISER. FINAL TERMINATION SHALL BE PROVIDED BY ETC AUTHORIZED FACTORY ENGINEER AT TIME OF SYSTEM START UP. SEE SPECIFICATION SECTION FOR ADDITIONAL INFORMATION.

DIMMING SCHEMATIC RISER KEY NOTES:

1. PROVIDE FA CONTROL MODULE AND CONTACT CLOSURE FOR INTERFACE WIRING BETWEEN ELTS AND FA SYSTEM TO ALLOW EMERGENCY LIGHTS TO COME UP TO FULL BRIGHTNESS UPON ACTIVATION OF FA SYSTEM.

2. ENTRY STATIONS SHALL BE 7-BUTTON STYLE WITH (4) PRESETS, DIM UP, DIM DOWN AND OFF. PRESET LOOKS SHALL BE SET WITH OWNER AT SYSTEM COMMISSIONING.

3. AV SYSTEM AND SHADE CONTROL INTERFACES SHALL BE COORDIANTED WITH AV ENGINEER PRIOR TO SUBMITTAL APPROVAL. PREFERRED METHOD OF INTERFACE IS CAT6 IF ACCEPTABLE BY AV MANUFACTURER.

4. 4 #12 AWG AND 4 #18 AWG (CONTROL WIRE) IN 3/4"C. SOME MANUFACTURERS REQUIRE AND EXTERNAL CIRCUIT BREAKER TAPPED AHEAD OF THE MAINS IN NORMAL POWER DIMMER RACK FOR EMERGENCY TRANSFER.

5. 1 #8471 AND 2 #16AWG AND 1 #14 AWG TWISTED SHIELDED (CONTROL WIRING) IN 3/4"C.

6. PROVIDE 120V POWER FROM NEAREST RECEPTACLE CIRCUIT TO POWER POE SWITCH.

7. DIMMING SYSTEM WILL REQUIRE AN EQUIPMENT RACK (NOT SHOWN) FOR INSTALLATION OF POE SWITCH AND BAS INTERFACE. COORDINATE RACK LOCATION IN FIELD. RACK WILL REQUIRE WIRING BACK TO DIMMING RACK. COORDINATE WIRING REQUIREMENTS PRIOR TO INSTALLATION.

HGA
333 East Erie Street
Milwaukee, Wisconsin 53202
Telephone 414.278.8200

ULINE
12575 Uline Drive
Pleasant Prairie, WI 53158

ULINE
SHIPPING SUPPLY SPECIALISTS

I HEREBY CERTIFY THAT THIS PLAN, SPECIFICATION OR REPORT WAS PREPARED BY ME OR UNDER MY DIRECT SUPERVISION AND THAT I AM A DULY LICENSED PROFESSIONAL ENGINEER UNDER THE LAWS OF THE STATE OF

NAME:
DATE: JULY 10, 2015
REGISTRATION NUMBER:

NO	DESCRIPTION	DATE
	CP-2	07/10/15

ISSUANCE HISTORY - THIS SHEET

HGA NO: 3595-001-00

LIGHTING CONTROL PANEL SCHEDULES

DATE: May 8, 2015

CONSTRUCTION DOCUMENTS

E530

7/10/2015 8:12:18 AM C:\Users\gljoshuar\Documents\Revit Local Files\E15-Uline Electrical-359500100_gljoshuar.rvt

© COPYRIGHT HAMMEL, GREEN AND ABRAHAMSON, INC.

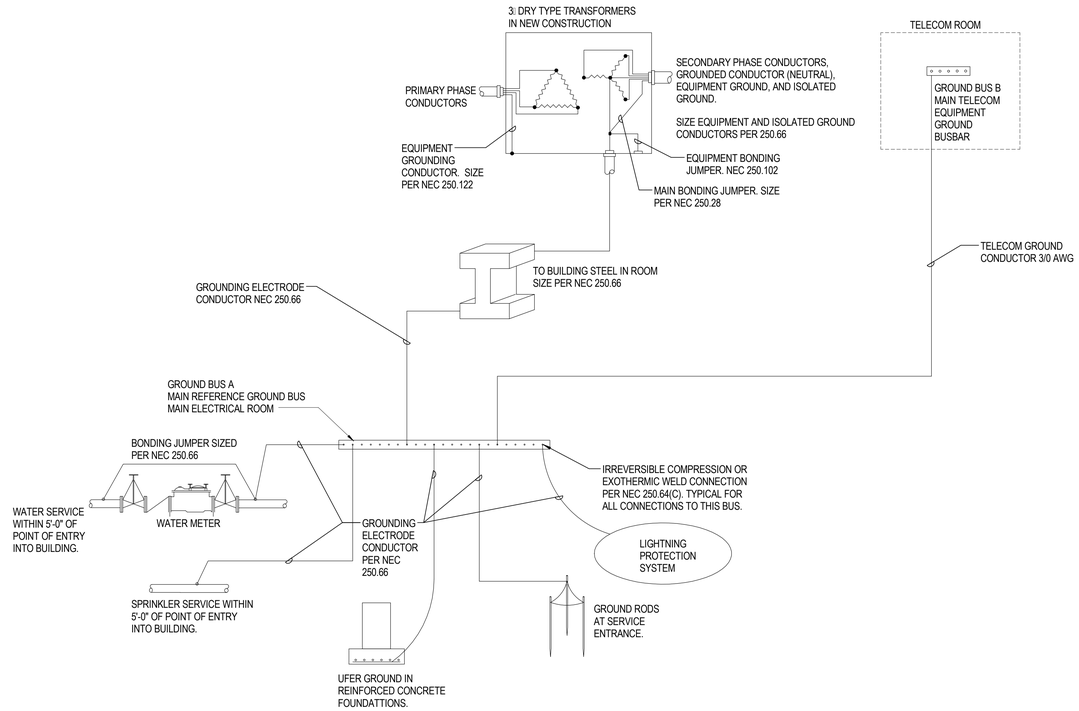

1 GROUNDING DIAGRAM
NTS

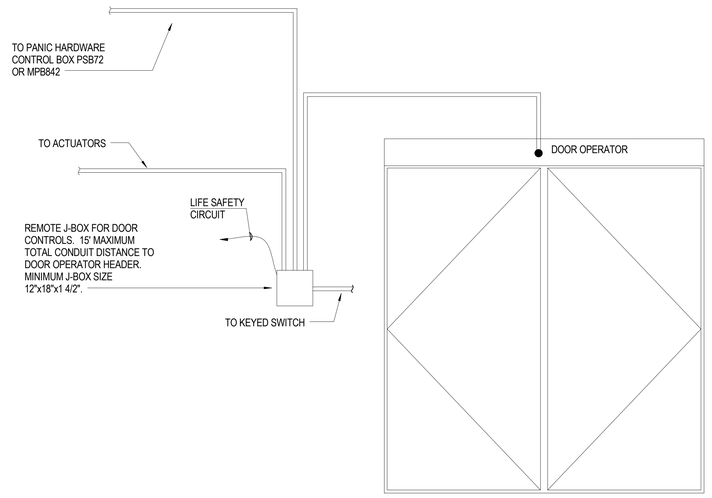

2 DOOR CONTROLLER
NTS

HGA
333 East Erie Street
Milwaukee, Wisconsin 53202
Telephone 414.278.8200

ULINE
12575 Uline Drive
Pleasant Prairie, WI 53158

ULINE
SHIPPING SUPPLY SPECIALISTS

I HEREBY CERTIFY THAT THIS PLAN, SPECIFICATION OR REPORT WAS PREPARED BY ME OR UNDER MY DIRECT SUPERVISION AND THAT I AM A DULY LICENSED PROFESSIONAL ENGINEER UNDER THE LAWS OF THE STATE OF

NAME:
DATE: JULY 10, 2015
REGISTRATION NUMBER:

NO	DESCRIPTION	DATE
	CP-2	07/10/15

ISSUANCE HISTORY - THIS SHEET

HGA NO: 3595-001-00

ELECTRICAL DETAILS

DATE: May 8, 2015

CONSTRUCTION DOCUMENTS

E601

© COPYRIGHT HAMMEL, GREEN AND ABRAHAMSON, INC.

7/10/2015 8:12:20 AM C:\Users\gjoshuar\Documents\Revit Local Files\E15-Uline Electrical-359500100_gjoshuar.rvt

ULINE CONFERENCE CENTER

10 JULY 2015

STONE TO MATCH
EXISTING ULINE
HEADQUARTERS

RAILING TO MATCH
EXISTING ULINE
HEADQUARTERS

CURTAIN WALL TO
MATCH EXISTING
ULINE HEADQUARTERS

ROOF TO MATCH
EXISTING ULINE
HEADQUARTERS

SOFFIT TO MATCH
EXISTING ULINE
HEADQUARTERS

STEEL BEAM PAINTED TO MATCH
FASCIA COLOR OF EXISTING
ULINE HEADQUARTERS

WOOD BEAMS TO MATCH EXISTING ULINE HEADQUARTERS

RAILING TO MATCH EXISTING ULINE HEADQUARTERS

CURTAIN WALL TO MATCH EXISTING ULINE HEADQUARTERS

ROOF TO MATCH EXISTING ULINE HEADQUARTERS

SOFFIT TO MATCH EXISTING ULINE HEADQUARTERS

STONE TO MATCH EXISTING ULINE HEADQUARTERS

STEEL BEAM PAINTED TO MATCH FASCIA COLOR OF EXISTING ULINE HEADQUARTERS

VILLAGE OF PLEASANT PRAIRIE

Wisconsin Award for Municipal Excellence

Filed 7/10 2015 Published 7/27 2015
Public Hearing 8/10 2015 8/3 2015
Fee Paid 7/10 2015 Approved ____ 20__
Notices Mailed 7/23 2015 Denied ____ 20__

VILLAGE OF PLEASANT PRAIRIE, WISCONSIN
ZONING MAP AND TEXT AMENDMENT APPLICATION

To: Village Plan Commission & Village Board of Trustees of the Village of ~~Pleasant~~ PLEASANT PRAIRIE:

I, (We), the undersigned owner(s)/agent do hereby petition the Village Board to amend the Village of Pleasant Prairie Zoning Map as hereinafter requested.

It is petitioned that the following described property be rezoned from the present ~~N/A~~ to correct the FPO overlay District(s) ~~to N/A~~ on the property ~~District(s)~~. The property petitioned to be rezoned is located at: Village to assign address (address) and is legally described as follows: see attached CSM and to amend to Uline PUD

Tax Parcel Number(s): 91-4-121-252-0203

The proposed use for this property is: for a proposed conference center PUD Text Amendment + floodplain boundary adjustment rezoning

Petitioner's interest in the requested rezoning: Existing Floodplain Boundary Adjustment + Conference Center

Compatibility with adjacent land uses: Acceptable. Floodplain Boundary Adjustment approved by Plan Commission on 6/8/15.

I (We) are also requesting a Zoning Text Amendment to amend Section N/A of the Village Zoning Ordinance.

I (We), have contacted the Community Development Department to arrange a pre-application meeting to discuss the proposed request to determine additional information that may be needed for this request.

I, (We), hereby certify that all the above statements and attachments submitted herewith are true and correct to the best of my knowledge.

PROPERTY OWNER:

Print Name: Randy Copenharve (Route 165, LLC)
Signature:
Address: 12575 Uline Drive
Pleasant Prairie, WI 53158
(City) (State) (Zip)
Phone: 262-612-4200
Fax: 262-612-4250
Email: rcopenharve@uline.com
Date 07-10-15

OWNER'S AGENT:

Print Name: Matt Carey (Pinnacle Engineering Grou
Signature:
Address: 15850 W. Bluemound Road, STE 210
Brookfield, WI 53005
(City) (State) (Zip)
Phone: 262-754-8888
Fax: 262-754-8850
Email: matt.carey@pinnacle-engr.com
Date: 07-10-15

PUD AMENDMENT

ORDINANCE # 08-45

ORDINANCE TO CREATE A PLANNED UNIT DEVELOPMENT PURSUANT TO CHAPTER 420-137 OF THE VILLAGE ZONING ORDINANCE FOR ULINE CORPORATE CAMPUS IN THE VILLAGE OF PLEASANT PRAIRIE, KENOSHA COUNTY, WISCONSIN

BE IT ORDAINED by the Village Board of Trustees of the Village of Pleasant Prairie, Kenosha County, Wisconsin, that the following PUD Ordinance is hereby created for Uline Corporate Campus pursuant to Chapter 420- 137 of the Village Zoning Ordinance to read as folows:

Uline Corporate Campus Planned Unit Development

a. Purpose and intent. The Uline Corporate Campus will provide for structures, improvements and uses on the property as legally described below that are in conformity with the Village of Pleasant Prairie adopted Comprehensive Land Use Plan and with the basic underlying M-1, Limited Manufacturing District zoning with the goal of facilitating development in a fashion that will not be contrary to the general health, safety, economic prosperity, and welfare of the Village, with the additional goal of encouraging proper maintenance of the structures, landscaping, parking areas, lighting, signage and general site development so as to promote an attractive and harmonious corporate campus, and seek to achieve a sustained desirability and economic stability and will seek to avoid unreasonable adverse effects to the property values of the surrounding properties. The development of the Uline Corporate Campus presents a specific benefit to the Village of Pleasant Prairie because it provides an catalyst for future corporate office development that will provide diverse and sustainable economic development potential for Kenosha County

b. Legal Description: The property is known as Lot 1 of Certified Survey Map #2634 as recorded at the Kenosha County Register of Deeds Office on July 18, 2008 as Document #1563099 and located in U.S. Public Land Survey Section 25, Township 1 North, Range 21 East in the Village of Pleasant Prairie and herein after referred to as the "DEVELOPMENT" ***(Exhibit A).***

c. Requirements within the DEVELOPMENT:

(i) The DEVELOPMENT shall be in compliance with all Federal, State, County and Village ordinances and regulations except as expressly modified in subsection (d) below.

(ii) The DEVELOPMENT shall be in compliance with the Dedication and Easement Provisions and Restrictive Covenants as specified on Certified Survey Map #2634 **(Exhibit A).**

(iii) The DEVELOPMENT shall be in compliance with the PrairieWood Corporate Park Declaration of Development Standards and Protective Covenants, as may be amended from time to time, as recorded at the Kenosha County Register of Deeds Office on November 27, 2001 as Document #1244390.

(iv) The DEVELOPMENT, including but not limited to, the building(s), accessory structure(s), sign(s), landscaping, walking trail, parking lot(s), exterior site lighting, etc., and the site as a whole; shall be maintained in a neat, presentable, aesthetically pleasing, structurally sound and non-hazardous condition.

(v) The DEVELOPMENT shall be in compliance with the Village conditionally approved Final Site and Operational Plans as conditionally approved by the Village Plan Commission on August 25, 2008.

(vi) All buildings/structures and all exterior additions, remodeling or alterations to the existing buildings/structures or to any future buildings/structures within the DEVELOPMENT shall be constructed of the same or complimentary exterior materials, colors and architectural style to ensure a unified development, including signage, lighting, landscaping, etc. No material alterations or modification to these colors or materials shall be made without the approval of the Village staff and/or Village Plan Commission and/or Village Board of Trustees.

(vii) The DEVELOPMENT shall be operated and maintained in a uniform manner, regardless of property ownership. If the DEVELOPMENT is sold to another entity(s), the DEVELOPMENT shall continue to operate as a unified development and shall continue to comply with this PUD.

(viii) No additional land divisions shall be allowed within the DEVELOPMENT unless approved by the Village.

d. Specific Modifications to the Village Zoning Ordinance Regulations and Specific Requirements for the DEVELOPMENT:

(i) Section 420-123 F of the Village Zoning Ordinance shall be amended to as follows: Building number, height and area.

1. Number of Principal Buildings: Five principal buildings are allowed within the DEVELOPMENT including three Corporate Offices buildings and two warehouse/distribution buildings.

2. Number and Location of Accessory Buildings: One pump house **building located east of the distribution center and south of thecorporate office building, one maintenance building located south of the distribution center, one conference center located south of the corporate office,** and no more than four guard stations. A guard station is defined as a booth like building to house security staff in conjunction with guard gates and contains technology related to the controlled entry to the site.

3. Principal Building Height: The Corporate Office buildings shall be a minimum of 30 feet in height and the warehouse/distribution buildings shall not exceed 60 feet in height.

4. Maximum Accessory Building Height: Pump house and guard stations shall not to exceed 20 feet, the maintenance building shall not exceed 24 feet and the conference center shall not exceed 45 feet.

5. Principal Building Area: The minimum total area of the Corporate Offices within the DEVELOPMENT shall be 200,000 square feet. The minimum total area of the

distribution buildings within the DEVELOPMENT shall be 1,000,000 square feet.

6. Accessory Building Area: the pump house shall not to exceed 1,500 square feet, the maintenance building shall not exceed 12,000 square feet, any guard or entrance station shall not exceed 500 square feet, and the conference center shall not exceed 25,000 square feet.

(ii) Section 420-123 G (6) related to separation distance between buildings is hereby created to read: The distance between any principal building and any detached accessory building on the site: 45 feet minimum.

(iii) Section 420-76 T of the Village Zoning Ordinance related to Primary Monument Signs is amended as follows:

1. One sign is required for said DEVELOPMENT.
2. A changeable copy sign, electronic changing message sign or electronic scrolling sign is permitted.
3. Maximum area: 450 square foot per face including the ashlar stone base and a 162 square foot per face internally illuminated sign display panel
4. Maximum height: 22 feet.
5. Minimum setback distance: 15 feet from any public street or highway right-of-way line.
6. Shall include the street address of the Corporate Office on the property (including the street number(s) and the name of the street).
7. Landscaping shall extend a minimum of five feet in every direction from the base or other support structure of the sign.
8. Shall be placed on a solid-appearing decorative base which supports a minimum of 75% of the horizontal dimension of the sign display. The base shall be constructed of materials complementary to the materials used in the corporate office building on the property where the sign is located. The height of the base area below the sign display shall not exceed 50% of the total sign height.

(iv) Section 420-76 Y of the Village Zoning Ordinance related to Secondary Monument Signs is amended as follows:

1. Maximum number: one sign permitted per entrance on the public street; however, if the Primary Monument sign is located at an entrance then a secondary monument sign is not allowed at that entrance.
2. The sign shall be located no more than 15 feet from a primary entrance driveway, as measured from the back of the curb of the driveway.
3. Maximum height: 7 feet
4. Minimum setback from any public street or highway right-of-way line: 15 feet.
5. Maximum area: 32 square feet per face
6. Landscaping: three feet in every direction from the sign base or other supporting structure.

7. May be illuminated.

8. Shall be placed on a solid-appearing decorative base which supports a minimum of 75% of the horizontal dimension of the sign display. The base shall be constructed of materials complementary to the materials used in the corporate office building on the property where the sign is located. The base may not exceed three feet in height beneath the sign display.

(v) Section 420-81 B (3) of the Village Zoning Ordinance related to the height of a Commercial fences is amended as follow: The fencing/screening wall surrounding the equipment yard shall not exceed the following requirements: the ornamental fence shall not exceed 15 feet in height and the precast panel screening wall shall not exceed 20 feet in height. The height shall Include all elevations, including berms, above the overall standard grade of the property.

(vi) Section 420-57 H (2) (i) [4] of the Village Zoning Ordinance related to roofing materials that are visible to the public is amended as follows: Standing seam metal roofing on the corporate office buildings and as architectural features on all other buildings within the DEVELOPMENT.

(vii) Amendments

1. The PUD regulations for said DEVELOPMENT may be amended pursuant to Section 420-13 - of the Village Zoning Ordinance.

2. For an amendment related to a particular parcel within the DEVELOPMENT, then the Owner(s) of said property requesting the change shall file the required application.

Adopted this 2nd day of September, 2008

ATTEST:

VILLAGE OF PLEASANT PRAIRIE

_____
John P. Steinbrink
Village President

_____
Jane M. Romanowski

Village Clerk

Posted: _____

45-Uline PUD.doc

ORDINANCE # 10-58

ORDINANCE TO AMEND THE ULINE CORPORATE CAMPUS PLANNED UNIT DEVELOPMENT PURSUANT TO CHAPTER 420-137 OF THE VILLAGE ZONING ORDINANCE IN THE VILLAGE OF PLEASANT PRAIRIE, KENOSHA COUNTY, WISCONSIN

BE IT ORDAINED by the Village Board of Trustees of the Village of Pleasant Prairie, Kenosha County, Wisconsin, that Chapter 420 Attachment 3, Appendix C of the Specific Development Plans 27 related to the Uline Corporate Campus Planned Unit Development is hereby amended as follows:

1. **Section b of PUD 27 is hereby amended to read as follows:**

   Legal Description: The property is known as Lot 1of Certified Survey Map **#2679** as recorded at the Kenosha County Register of Deeds Office on **November 22, 2010** as Document **#1633220** and located in U.S. Public Land Survey Section 25, Township 1 North, Range 21 East in the Village of Pleasant Prairie and herein after referred to as the "DEVELOPMENT" **(*Exhibit* A).**

2. **Section c {v) of PUD 27 is hereby amended to read as follows:**

   The DEVELOPMENT shall be in compliance with **all** Village **of Pleasant Prairie** conditionally approved Site and Operational Plans **and Village Ordinance requirements.**

Adopted this 1sth day of October, 2010

VILLAGE OF PLEASANT PRAIRIE

John P. Steinbrink
Village President

ATTEST:

Jane M. Romanowski
Village Clerk

Posted: 12/3/10

58-Uline PUD amend.doc

PROPOSED CONFERENCE CENTER

EXISTING H1 FACILITY

PROPOSED FLOODPLAIN BOUNDARY ADJUSTMENT

100 YR W.S.E. - 731.00 (CONTAINED IN BASIN

100 YR W.S.E. - 731.00 (CONTAINED IN BASIN

100 YR W.S.E. CONTAINED WITHIN CULVERT

100 YR W.S.E. CONTAINED WITHIN CULVERT

100 YR W.S.E. CONTAINED WITHIN DITCH

PROPERTY LINE

EXISTING FLOODPLAIN

PROPOSED FLOODPLAIN BOUNDARY ADJUSTMENT

SECTION LINE

EXISTING FLOODPLAIN
FEMA LOMR CASE # 08-05-2135P
DATED MAY 16, 2008

LOCATION MAP
SECTION 25, T1N, R21E
SCALE 1" = 1200'

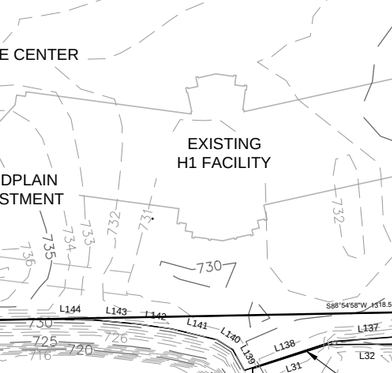

Line Table		
Line #	Direction	Length
L1	N19° 29' 46.58"E	0.12'
L2	N19° 29' 46.58"E	29.66'
L3	N4° 14' 44.40"E	36.19'
L4	N3° 19' 29.24"W	34.78'
L5	N25° 59' 24.63"W	19.80'
L6	N50° 50' 14.38"W	19.51'
L7	N76° 45' 11.99"W	19.07'
L8	S71° 02' 40.05"W	17.43'
L9	S47° 22' 38.25"W	18.42'
L10	S24° 14' 52.09"W	17.29'
L11	S8° 30' 40.54"W	33.07'
L12	S1° 27' 20.80"W	39.55'
L13	S8° 38' 14.13"E	38.27'
L14	S18° 42' 09.07"E	30.48'
L15	S20° 16' 42.96"E	20.45'
L16	S7° 06' 49.47"W	132.45'
L17	S15° 45' 18.48"W	57.70'
L18	S2° 00' 20.11"E	472.41'
L19	S12° 08' 01.57"W	53.07'
L20	S42° 59' 49.84"W	43.98'
L21	S69° 20' 13.11"W	61.71'
L22	S87° 28' 15.57"W	162.12'
L23	S86° 07' 24.77"W	61.63'
L24	S83° 11' 58.86"W	54.39'
L25	S77° 27' 34.06"W	56.57'
L26	S72° 18' 41.06"W	31.98'
L27	S60° 03' 40.51"W	58.14'
L28	S45° 16' 07.64"W	35.70'
L29	S16° 25' 15.24"W	48.51'
L30	S4° 11' 17.15"E	60.37'
L31	S72° 23' 03.15"W	104.15'
L32	S89° 39' 52.87"W	104.49'
L33	S88° 17' 31.74"W	427.03'
L34	N87° 44' 28.82"W	198.93'
L35	S87° 08' 52.13"W	292.63'

Line Table		
Line #	Direction	Length
L36	S88° 07' 15.52"W	287.53'
L37	S84° 41' 59.96"W	37.14'
L38	N88° 46' 03.59"W	240.29'
L39	N55° 55' 03.15"W	10.26'
L40	N38° 47' 49.69"W	24.49'
L41	N33° 17' 16.91"W	32.40'
L42	N24° 00' 33.95"W	69.67'
L43	N12° 54' 32.21"W	35.91'
L44	N18° 21' 24.52"W	25.48'
L45	N2° 03' 35.87"W	9.85'
L46	N15° 16' 38.66"W	4.00'
L47	N38° 45' 48.96"W	4.58'
L48	N68° 32' 52.93"W	13.44'
L49	N40° 26' 16.09"W	7.81'
L50	N47° 44' 30.66"W	6.46'
L51	S42° 58' 18.65"W	17.57'
L52	S85° 29' 04.41"W	11.94'
L53	N68° 18' 51.19"W	18.98'
L54	N37° 10' 55.94"W	17.27'
L55	N21° 59' 31.32"W	15.09'
L56	N24° 06' 48.65"W	26.67'
L57	S1° 53' 28.20"E	31.91'
L58	S3° 44' 30.70"E	28.43'
L59	S6° 09' 21.56"W	17.29'
L60	S15° 52' 13.80"W	2.68'
L61	S0° 50' 02.53"W	11.55'
L62	S0° 59' 27.03"E	11.87'
L63	S45° 17' 44.29"E	14.00'
L64	S8° 06' 49.39"E	56.11'
L65	S18° 45' 55.61"E	19.38'
L66	S37° 29' 22.92"E	8.89'
L67	S53° 13' 21.10"E	5.77'
L68	N86° 25' 53.15"E	4.10'
L69	N42° 15' 54.23"E	14.91'
L70	N33° 02' 05.76"E	24.81'

Line Table		
Line #	Direction	Length
L71	N1° 52' 32.66"E	3.76'
L72	N12° 10' 15.90"W	5.68'
L73	N4° 35' 18.02"W	6.69'
L74	N16° 30' 27.99"W	21.07'
L75	S62° 30' 21.29"E	5.98'
L76	S39° 36' 46.52"E	10.86'
L77	S44° 07' 28.27"E	12.07'
L78	N44° 07' 26.50"E	8.41'
L79	N28° 15' 56.08"W	19.45'
L80	N32° 45' 59.62"W	28.87'
L81	N10° 56' 09.60"W	3.13'
L82	N22° 54' 38.95"E	3.93'
L83	N42° 07' 02.27"E	11.30'
L84	S85° 42' 19.85"E	3.05'
L85	S43° 25' 10.64"E	5.36'
L86	S27° 44' 01.91"E	22.29'
L87	S35° 52' 38.76"E	23.14'
L88	S20° 33' 51.15"E	100.38'
L89	S41° 14' 14.99"E	67.79'
L90	S88° 40' 18.63"E	135.78'
L91	N88° 20' 10.79"E	147.46'
L92	N88° 14' 08.97"E	289.32'
L93	N86° 54' 08.02"E	291.02'
L94	N86° 21' 10.70"E	41.15'
L95	S80° 23' 25.48"E	10.11'
L96	S41° 17' 23.77"E	10.11'
L97	S22° 19' 31.27"E	24.41'
L98	S19° 14' 22.07"E	58.63'
L99	S53° 48' 26.57"W	9.93'
L100	S37° 44' 37.42"W	14.46'
L101	S25° 51' 03.18"W	22.98'
L102	S0° 50' 16.77"E	48.40'
L103	S3° 09' 58.79"E	56.70'
L104	S10° 08' 29.91"E	47.45'
L105	S10° 29' 16.62"E	40.61'

Line Table		
Line #	Direction	Length
L106	S11° 17' 41.28"E	70.06'
L107	S30° 43' 37.81"E	27.55'
L108	S80° 00' 19.47"E	21.47'
L109	N62° 06' 49.88"E	35.20'
L110	N15° 14' 35.21"E	28.82'
L111	N1° 17' 00.80"E	55.66'
L112	N0° 33' 54.92"W	50.47'
L113	N2° 22' 33.36"W	47.50'
L114	N47° 47' 51.49"E	37.90'
L115	N89° 00' 21.14"E	164.87'
L116	N86° 37' 32.80"E	53.61'
L117	N75° 02' 11.49"E	29.28'
L118	N36° 17' 12.21"E	29.38'
L119	N4° 31' 53.70"E	30.06'
L120	N26° 41' 37.47"W	37.04'
L121	N69° 00' 18.74"W	31.79'
L122	S89° 13' 45.61"W	126.66'
L123	S88° 40' 48.32"W	64.78'
L124	S87° 15' 55.32"W	104.17'
L125	N84° 53' 53.89"W	22.26'
L126	S71° 41' 47.07"W	9.13'
L127	N19° 14' 22.07"W	49.50'
L128	N9° 04' 47.02"E	12.70'
L129	N43° 30' 55.64"E	12.95'
L130	N70° 23' 33.98"E	29.40'
L131	N86° 07' 26.73"E	41.89'
L132	S89° 38' 38.30"E	37.22'
L133	N86° 29' 54.05"E	25.54'
L134	S82° 20' 22.37"E	21.29'
L135	N84° 40' 41.71"E	65.36'
L136	N88° 05' 36.33"E	325.64'
L137	N85° 43' 00.38"E	98.55'
L138	N71° 54' 26.93"E	121.59'
L139	S29° 39' 03.31"E	31.14'
L140	S57° 28' 00.59"E	24.62'

Line Table		
Line #	Direction	Length
L141	S76° 29' 28.72"E	61.06'
L142	S81° 59' 18.98"E	47.42'
L143	S84° 42' 58.34"E	54.86'
L144	S89° 16' 51.92"E	65.00'
L145	S89° 59' 43.61"E	264.00'
L146	S54° 24' 45.06"E	0.88'
L147	N72° 35' 52.48"E	30.43'
L148	N13° 31' 10.64"W	4.13'
L149	N14° 18' 16.72"W	64.00'
L150	N75° 41' 41.00"E	80.00'
L151	S14° 18' 16.72"E	30.93'
L152	N76° 19' 08.05"E	34.40'
L153	N2° 22' 16.83"W	201.84'
L154	N14° 36' 17.45"W	48.63'
L155	N2° 25' 57.44"W	768.55'

NORTH

GRAPHICAL SCALE (FEET)

0 1" = 200' 400'

ULINE CONFERENCE CENTER FLOODPLAIN BOUNDARY ADJUSTMENT

07/10/2015

PINNACLE ENGINEERING GROUP

5850 W. BLUEMOUND ROAD | SUITE 210 | BROOKFIELD, WI 53005 | WWW.PINNACLE-ENGR.COM |

PLAN | DESIGN | DELIVER

PEG JOB# 119.80

H. Consider the request of Ralph Nudi, agent for the owner RMN Properties, Inc. for approval of a **Certified Survey Map** to subdivide the property located at 11206 8th Avenue into two (2) parcels.

Recommendation: Village staff recommends that the Plan Commission send a favorable recommendation to the Village Board to approve the **Certified Survey Map** subject to compliance with the comments and conditions of the Village Staff Report of August 10, 2014.

VILLAGE STAFF REPORT OF AUGUST 10, 2015

Consider the request of Ralph Nudi, agend for the owner RMN Properties, Inc. for approval of a **Certified Survey Map** to subdivide the property located at 11206 8th Avenue into two (2) parcels.

The petitioner is requesting approval of a Certified Survey Map to subdivide the property located at 11206 8th Avenue into two properties. This property is zoned R-6, Urban Single Family Residential District.

Lot I is proposed to be 9,961 square feet with 80 feet of frontage on 8th Avenue. This lot has an existing house and a detached garage. The existing home built in 1962 is considered a legal non-conforming structure in that the home is setback 5.9 feet from the side property line wherein a the current zoning requires a 8 foot setback. Any addition to the house will be required to meet the current setback in effect.

Lot II is proposed to be 10,026 square feet with 80.02 feet for frontage on 8th Avenue. This lot has a detached garage that is intended to be razed. Razing permits have been submitted to the Village. If the building is not razed prior to the CSM being completed, then the following note shall be placed on the face of the CSM: "The detached garage on Lot II shall be removed by October 1, 2015." If the building has been razed prior to finalizing the CSM then the surveyor shall remove the structure from the face of the CSM.

A new house constructed on Lot II will be required to connect to the existing municipal sanitary sewer and municipal water within 8th Avenue and shall be required to meet the minimum requirements of the R-6 District which includes the following setbacks:

- Setback to the property line adjacent to 8th Avenue of 30 feet.
- Setback to the side property lines of 8 feet.
- Setback to the rear property line of 25 feet.

The proposed land division conforms with the minimum regulations of the R-6 Zoning District requirements related to lot area and lot frontage (6,000 square feet in area with 60 feet of frontage on a public street).

Village staff recommends that the Plan Commission send a favorable recommendation to the Village Board to approve the **Certified Survey Map** subject to compliance with the above comments, the conditions below and the recording of the CSM at the Kenosha County Register of Deeds Office 30 days of Village Board approval.

1. The CSM shall be revised to include the following note, executed by the owners and submitted to the Village for the Village to execute prior to recording of the document:
    a. If the building is not razed prior to the CSM being completed, then the following note shall be placed on the face of the CSM: "The detached garage on Lot II shall be removed by October 1, 2015." If the building has been razed prior to finalizing the CSM then the surveyor shall remove the structure from the face of the CSM.
2. Any outstanding taxes or levied special assessments shall be paid prior to recording the CSM.
3. The CSM shall be finalized, executed and recorded at the Kenosha County Register of Deeds Office and a recorded copy of the CSM shall be provided to the Village within 30 days of Village Board's approval and prior to issuance of building permit.

VILLAGE OF
PLEASANT PRAIRIE

W sewer + 225 sq

RECEIVED
JUL 24 2015
PLEASANT PRAIRIE

Filed 7/24 2015
Fee Paid 7/24 2015
PC Meeting Date 8/10 2015
VB Meeting Date 8/17 2015
Approved ____ 20__
Denied ____ 20__

VILLAGE OF PLEASANT PRAIRIE
CERTIFIED SURVEY MAP APPLICATION

To: Village Plan Commission & Village Board of Trustees of the Village of Pleasant Prairie:

I, (We), the undersigned owner(s)/agent do hereby petition the Village Board to amend the Village of Pleasant Prairie Zoning Map as hereinafter requested.

It is petitioned that the following described property be subdivided with a Certified Survey Map (CSM)

The property petitioned to be subdivided is located at: 11206 8th Ave

× and is legally described as follows: LOT 32/33 Block 6 Carol Beach Estates Unit 1

× Tax Parcel Number(s): 93-4-123-304-1536

The property abuts or adjoins a State Trunk Highway	☐ Yes	☒ No
The property abuts or adjoins a County Trunk Highway	☐ Yes	☒ No
Municipal Sanitary Sewer is available to service said properties	☒ Yes	☐ No
Municipal Water is available to service said properties	☒ Yes	☐ No

I (We), have contacted the Community Development Department to arrange a pre-application meeting to discuss the proposed request with the Village staff to determine additional information that may be needed to consider the request.

I, (We), hereby certify that all the above statements and attachments submitted herewith are true and correct to the best of my knowledge.

PROPERTY OWNER: Ralph Nudi

Print Name: RMN Properties

Signature: Ralph Nudi

Address: 6119 Sheridan Rd

Kenosha (City) WI (State) 53143 (Zip)

Phone: 262 764 6933

Fax: ____

Date 7/24/15

OWNER'S AGENT:

Print Name: ____

Signature: ____

Address: ____

(City) (State) (Zip)

Phone: ____

Fax: ____

Date: ____

Email Special moseo@yahoo.com

RECEIVED

JUL 24 2015

PLEASANT PRAIRIE

Lots shown hereon are served by public sanitary sewer.

*May be superceded by local ordinance

Lot 31 Block 6 Carol Beach Estates Unit No. 1

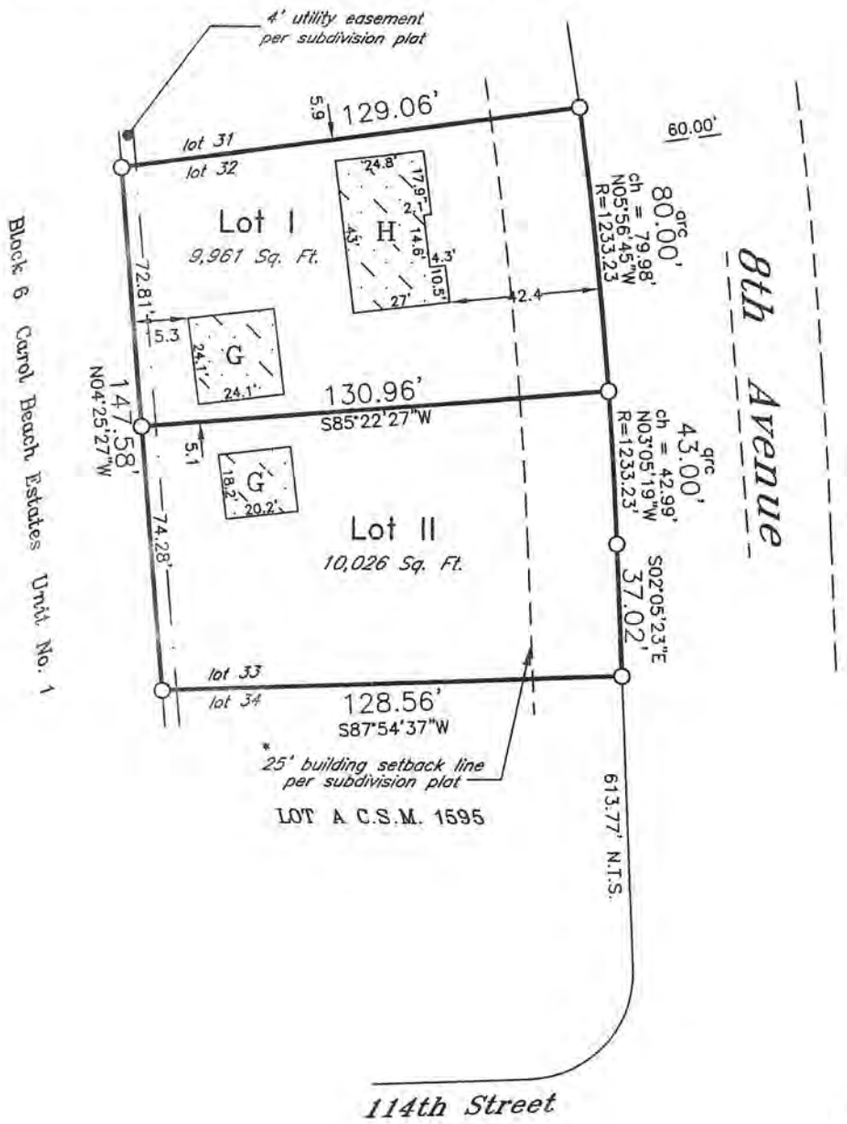

Scale 1" = 50'

H – house

G – garage

denotes 1" x 2' iron pipe (weight: 1.13 lbs per foot)

NOTE: Bearings shown hereon refer to the recorded subdivision plat, "Carol Beach Estates Unit No. 1"

J.K.R. SURVEYING, INC.
8121 22ND AVENUE KENOSHA, WI. 53143

CERTIFIED SURVEY MAP

– for –

RMN Properties LLC

(Re-division of Lots 32 & 33 Block 6 in Carol Beach Estates Unit No. 1)

in SE1/4 Section 30-1-23

VILLAGE OF PLEASANT PRAIRIE

KENOSHA COUNTY, WIS.

WISCONSIN
JEFFREY K. RAMPART
2141
KENOSHA, WI
LAND SURVEYOR

.....

WISCONSIN REGISTERED LAND SURVEYOR

Dated..... July 24, 2015.....

CERTIFIED SURVEY MAP NO.....

CERTIFIED SURVEY MAP

I, JEFFREY K. RAMPART, SURVEYOR, hereby certify that I have prepared this certified survey map, the exterior boundaries of which are described as:

Lot 32 and Lot 33 in Block 6 in Carol Beach Estates Unit No. 1, a subdivision plat on file and of record in the Kenosha County Land Registry; lying and being in part of the Southeast Quarter of Section 30, Town 1 North, Range 23 East of the Fourth Principal Meridian and lying and being in the Village of Pleasant Prairie, Kenosha County, Wisconsin and being subject to easements and restrictions of record.

That I have complied with the provisions of chapter 236.34 of the State Statutes on certified surveys and the Village of Pleasant Prairie Land Division and Platting Ordinance.

Dated this 24th day of July, 2015.

SURVEYOR.....

JEFFREY K. RAMPART

As owner, I hereby certify that I caused the land described on this plat to be surveyed, divided, dedicated and mapped as represented on this plat.

RMN PROPERTIES LLC

OWNER.....

PRINT NAME.....

STATE OF WISCONSIN
KENOSHA COUNTY S.S.

Personally came before me this ..... day of ....., 20__, the above named Owner, RMN Propeties, LLC to me known to be the person who executed the foregoing instrument and acknowledged the same.

My Commission Expires..... .....

NOTARY PUBLIC

This certified survey map has been submitted to and approved by the Village Board of the Village of Pleasant Prairie on this ..... day of ....., 20__.

....

PLAN COMMISSION CHAIRMAN, Thomas W. Terwall

VILLAGE CLERK, CMC, Jane M. Romanowski

OWNER

RMN PROPERTIES LLC
5405 – 24th Place
Kenosha, WI 53144

APPROVED.....

VILLAGE PRESIDENT, John P. Steinbrink

CERTIFIED SURVEY MAP NO.....

I. Consider the request of Alan and Michelle Deloria for approval of a **Lot Line Adjustment** between their property located at 3464 93rd Street and the vacant property to the east and north.

Recommendation:

Village staff recommends that the Village Plan Commission send a favorable recommendation to the Village Board to approve the **Lot Line Adjustment** subject to the comments and conditions of the August 10, 2015 Village Staff Report.

VILLAGE STAFF REPORT OF AUGUST 10, 2015

Consider the request of Alan and Michelle Deloria for approval of a **Lot Line Adjustment** between their property located at 3464 93rd Street and the vacant property to the east and north.

The petitioners, owners of the property located at 3464 93rd Street (Tax Parcel Number 91-4-122-133-0260) are proposing to adjust the lot line with the adjacent vacant property to the north and east (Tax Parcel Number 91-4-122-133-0255) owned by Denise DeLoria.

Both properties are zoned R-4(UHO) Urban Single Family Residential District with a Urban Landholding Overlay District. The R-4 District requires lots to be a minimum of 15,000 square feet with a minimum of 90 feet of frontage on a public street.

Pursuant to the Isetts Neighborhood Plan for this area 34th Avenue is proposed to be extended south from the City of Kenosha and connect to 93rd Street on the east portion of the vacant property (Tax Parcel Number 91-4-122-133-0255). After the Lot Line Adjustment this vacant property will have 140 feet of frontage on 93rd Street which would allow ½ of a future right-of-way and a lot to be created in accordance with the aforementioned Neighborhood Plan.

After the adjustment, both lots will continue to meet the minimum lot area of the R-4 District and the intention of the Neighborhood Plan.

The Lot Line Adjustment will comply with the requirements set forth in the Village Zoning Ordinance and Land Division and Development Control Ordinance.

The Village staff recommends approval of the Lot Line Adjustment subject to the petitioners recording the proper transfer documents with the Plat of Survey for the Lot Line Adjustment as an Exhibit at the Kenosha County Register of Deeds Office within 30 days of final Village approval.

VILLAGE OF PLEASANT PRAIRIE PLAN COMMISSION
RESOLUTION #99-17

RESOLUTION TO ADOPT NEIGHBORHOOD PLANS FOR A PORTION OF THE ISETTS NEIGHBORHOOD LOCATED AT THE NORTHEAST CORNER OF 93RD STREET AND 39TH AVENUE (CTH EZ) IN THE VILLAGE OF PLEASANT PRAIRIE, KENOSHA COUNTY, WISCONSIN.

WHEREAS, the Village of Pleasant Prairie, pursuant to the provisions of Section 62.23 of the Wisconsin Statutes, has created a Village Plan Commission; and

WHEREAS, the Village Plan Commission held a Public Informational Meeting on July 26, 1999 related to three (3) Neighborhood Plans for a portion of the Isetts Neighborhood generally located north of 93rd Street, south of 89th Street, east of 39th Avenue (CTH EZ) and west of 32nd Avenue in the Village; and

WHEREAS, the entire Isetts Neighborhood, as depicted on the Comprehensive Land Use Plan, is generally bounded by 85th Street to the north, 93rd Street to the south, 30th Avenue to the east and Cooper Road to the west--portions of this neighborhood also incorporated areas of the City of Kenosha; and

WHEREAS, Neighborhood Plans are based on geographical areas or neighborhoods as delineated in the Village's Comprehensive Land Use Plan, and are intended to provide the Village Plan Commission, the Village Board of Trustees and the Village residents with an early opportunity to review future probable patterns and densities of existing and proposed land uses within a developing or changing neighborhood; and

WHEREAS, Neighborhood Plans are presented to evaluate the compatibility of land uses, to identify how future land divisions could occur, plans how access roadways to the land divisions could be provided and examines the practicability of providing certain lot layouts, road layouts, parkways, open space, park areas, preservation areas, public community facilities, infrastructure improvements and municipal services to service the area. Neighborhood Planning is essential to the orderly growth of the community and establishes a framework as to how development should occur when it occurs; and

WHEREAS, the Village Comprehensive Land Use Plan indicates that the area located at the northeast corner of the 93rd Street and 39th Avenue (CTH EZ) is designated as Upper-Medium Density Residential -- meaning that the overall density of the neighborhood should be 6,200 to 11,999 square feet or more (per dwelling unit/lot) -- while maintaining environmental features such as wetlands, shorelands, floodplains and other environmental features; and

WHEREAS, the majority of the neighborhood is comprised primarily of large lot (one acre or greater lots), metes and bounds described, single-family residential development located along the north side of 93rd Street and along the east side of 39th Avenue with the interior portion of the neighborhood containing largely vacant and undeveloped land. There are multiple-family land uses located at the southeast corner of 89th Street and 39th Avenue and an institutional use (Lakeshore Tabernacle Church) located at the southwest corner of 89th Street and 34th Avenue; and

WHEREAS, three (3) alternative Neighborhood Plans are being considered for a portion of the Isetts Neighborhood. All three (3) of the Alternatives recommend that the area at the northeast corner of the 93rd Street and 39th Avenue (CTH EZ) be developed with single family residential lots.

Under Alternative 1 -- the average lot 24,600 square feet would provide for about 57 single family lots
Under Alternative 2 -- the average lot 18,750 square feet would provide for about 69 single family lots
Under Alternative 3 -- the average lot 22,220 square feet would provide for about 57 single family lots
(The areas used for public rights-of-way, wetlands, shoreland and the area needed for stormwater management which totals about 16-20% are excluded in these density calculations); and

WHEREAS, all three (3) Alternatives depict two (2) street connections to 93rd Street, and street connections/extensions of 33rd, 34th and 38th Avenues. None of the Alternative show any street connections to 39th Avenue (CTH EZ), the highway arterial. Alternatives 1 and 2 depict the westernmost 93rd Street connection as a through street, while Alternative 3 depicts this westernmost 93rd Street connection as a cul-de-sac.

NOW, THEREFORE, BE IT RESOLVED, that the Village Plan Commission on this 26th day of July, 1999 hereby adopts and supports the attached Neighborhood Plans (**Alternatives 1 and 3**) as presented at the Public Informational Meeting for that portion of the Isetts Neighborhood located in the Village of Pleasant Prairie for the area generally located at the northeast corner of the 93rd Street and 39th Avenue (CTH EZ) in the Village of Pleasant Prairie, Kenosha County, Wisconsin.

BE IT FURTHER RESOLVED, that the Village of Pleasant Prairie Plan Commission shall periodically review the Neighborhood Plans and shall recommend extensions, changes or additions to the plans which the Village Plan Commission determines would be necessary. Shall the Village Plan Commission find that no changes are necessary, these finding shall be reported to the Village Board of Trustees.

PASSED AND ADOPTED this 26th day of July, 1999

VILLAGE OF PLEASANT PRAIRIE

ATTEST:

Thomas W. Terwall
Plan Commission Chairman

Donald L. Hackbarth
Plan Commission Secretary

Posted: 8/9/99

93rd St & 39th Ave.17

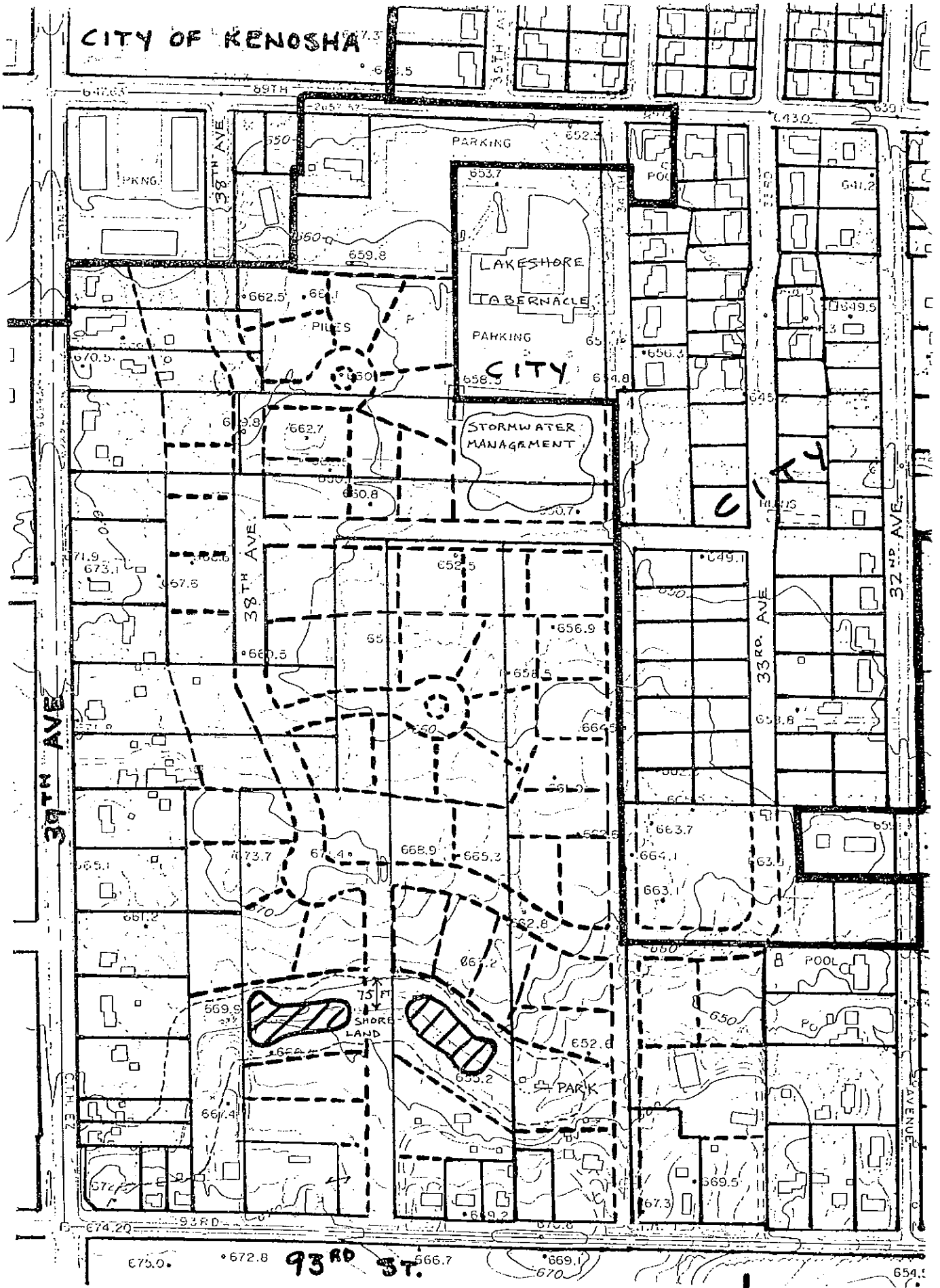

NEIGHBORHOOD SKETCH PLAN

ALT. 1

APPROX. 48 ACRES

57 LOTS

24,600 AVG. LOT

WETLANDS

1" = 200'

N

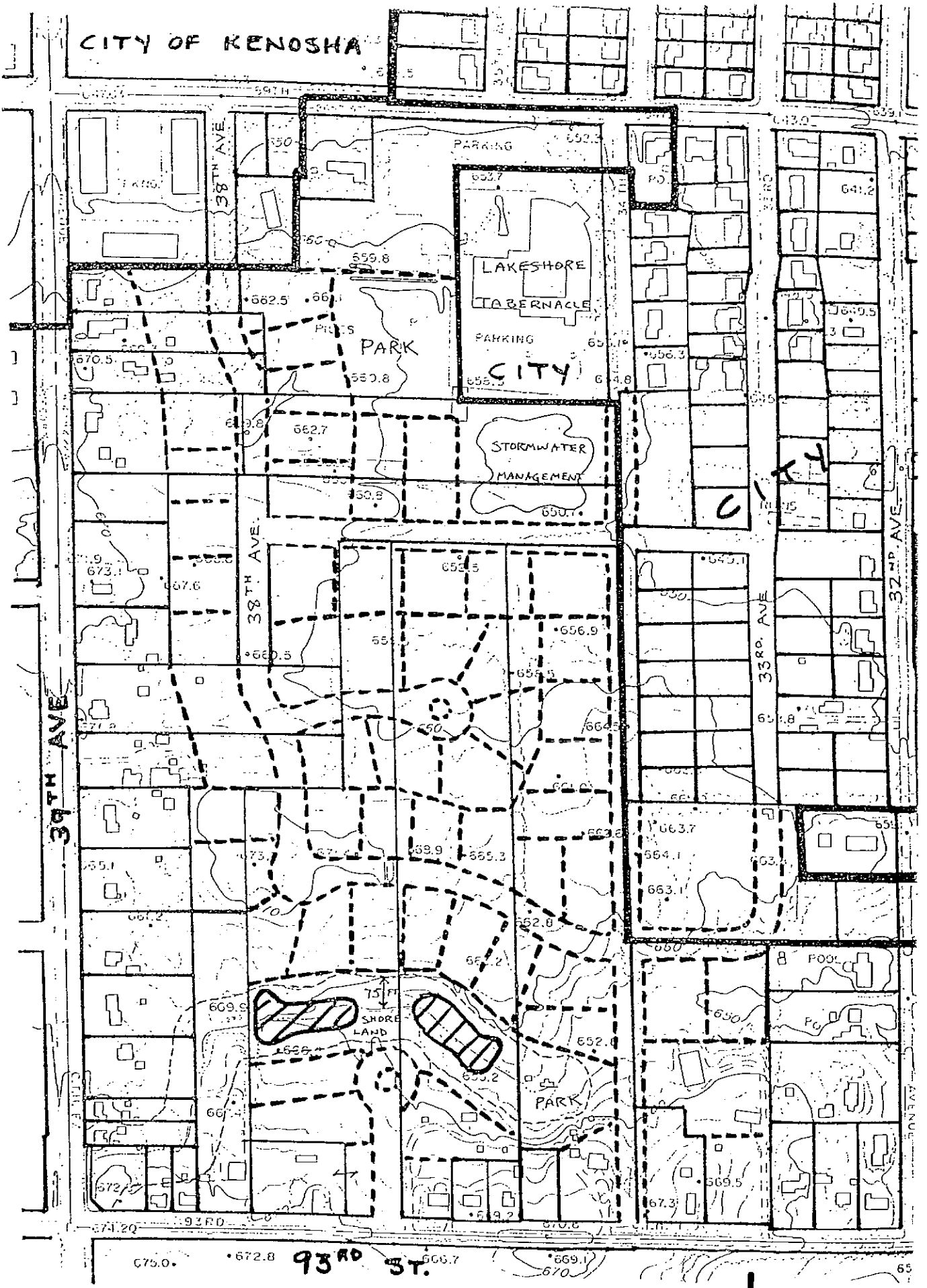

ALT 3

NEIGHBORHOOD SKETCH PLAN

Approx. 48 Acres

57 Lots

WETLANDS

1" = 20'

July 28, 2015

Village of Pleasant Prairie:

We are seeking approval of a lot line adjustment from Parcel A to Parcel B at 3464 93rd Street. A Plat of Survey is provided referencing specific sq. footage adjustment.

Thank you,

Michelle & Alan DeJoria
262-496-4996
mjdeloria@gmail.com

RECEIVED
JUL 28 2015
PLEASANT PRAIRIE

Re: 3464 93rd St.
Pleasant Prairie, WI
53158

address: 3464 – 93rd Street

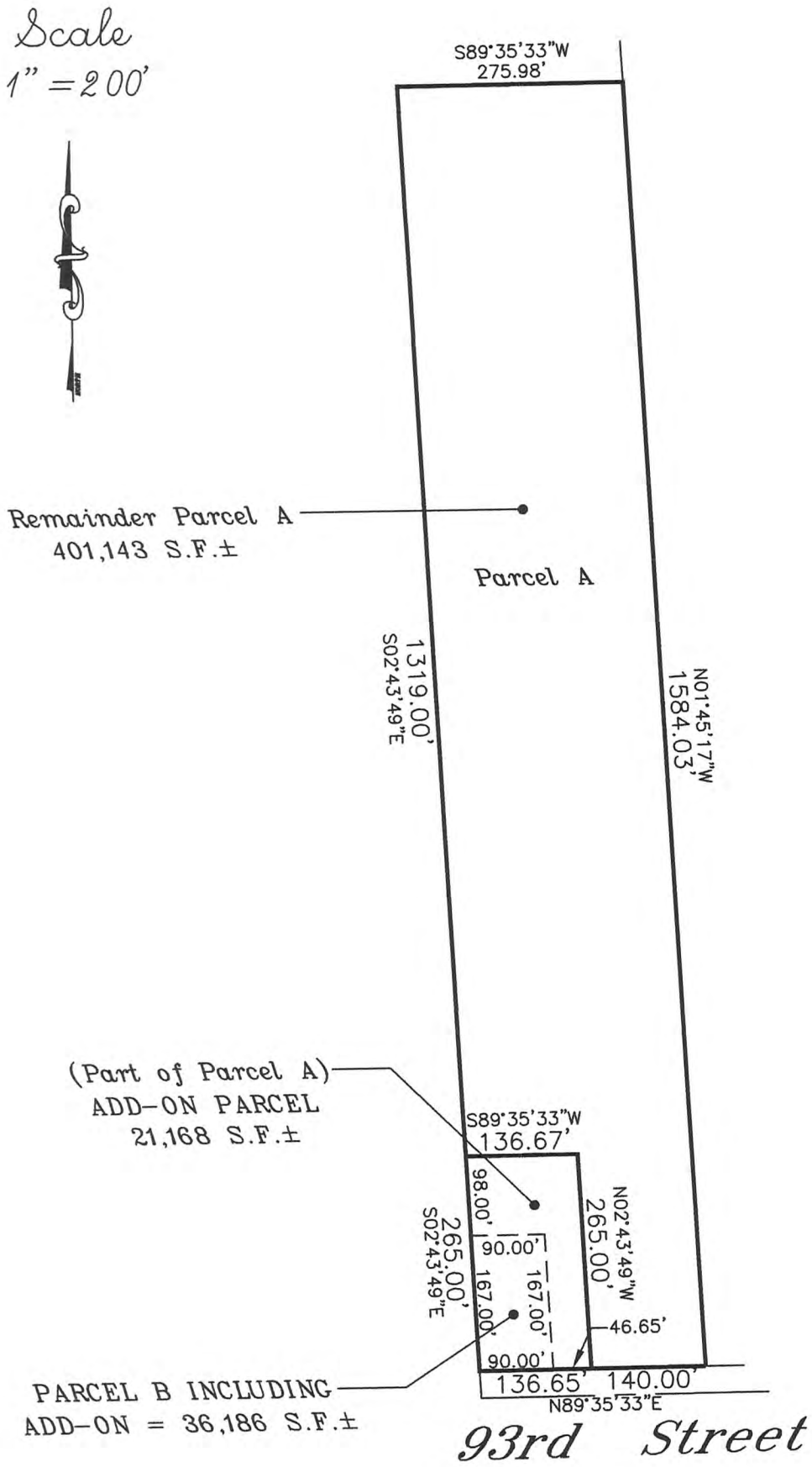

LEGAL DESCRIPTION FOR LOT LINE ADJUSTMENT:

PARCEL TO BE DETACHED FROM TAX KEY NO: 91-4-122-133-0255 (PARCEL A CERTIFIED SURVEY MAP NO. 1602) AND ADD-ON PARCEL TO TAX KEY NO: 91-4-122-133-0260 (PARCEL B CERTIFIED SURVEY MAP NO. 1602).

Part of Parcel A of Certified Survey Map No. 1602, a plat on file and of record in the Kenosha County Land Registry; lying and being in part of the Southwest Quarter of Section 13, Town 1 North, Range 22 East of the Fourth Principal Meridian and being in the Village of Pleasant Prairie, Kenosha County, Wisconsin and being more particularly described as: Beginning at the southwest corner of said Parcel A; which is also the southeast corner of said Parcel B of said Certified Survey Map No. 1602; thence N89°35'33"E along the south line of said Parcel A, 46.65 feet; thence N02°43'49"W parallel to the west line of said certified survey map 265.00 feet; thence S89°35'33"W parallel to the south line of said certified survey map 136.67 feet to the west line of said Parcel A; thence S02°43'49"W along the west line thereof 98.00 feet to the northwest corner of aforesaid Parcel B; thence N89°35'33"E along the north line of said Parcel B, 90.00 feet to the northeast corner thereof; thence S02°43'49"E along the east line of said Parcel B, 167.00 feet to the southeast corner thereof and the point of beginning; containing 21,168 square feet, more or less.

The Plat of Survey for Lot Line Adjustment is hereby approved by the Village Board of The Village of Pleasant Prairie on the _____ day of _____, 2015.

.....
PLAN COMMISSION CHAIR, Thomas W. Terwall

.....
VILLAGE CLERK, Jane M. Romanowski

.....
VILLAGE PRESIDENT, John P. Steinbrink

Refer to a current title report for easements or restrictions which may affect the use of this site that are not shown on the recorded certified survey map.

denotes iron pipe

J.K.R. SURVEYING, INC.
8121 22ND AVENUE
KENOSHA, WI 53143

WISCONSIN
JEFFREY K. RAMPART
2141
KENOSHA, WI
LAND SURVEYOR

I hereby certify that this property was surveyed under my direction and this plat is a true re-presentation thereof.

.....
Reg. Land Surveyor
July 28, 2015

Plat of Survey for Lot Line Adjustment

BETWEEN LOTS A & B OF

CERTIFIED SURVEY MAP NO. 1602

in SW1/4 Section 13-1-22

VILLAGE OF PLEASANT PRAIRIE
KENOSHA COUNTY, WIS.

-for-
Alan Deloria

VILLAGE OF PLEASANT PRAIRIE PLAN COMMISSION
RESOLUTION #15-16

TO AMEND THE VILLAGE OF PLEASANT PRAIRIE, WISCONSIN 2035 COMPREHENSIVE PLAN AND THE VILLAGE ZONING MAP

WHEREAS, on August 24, 2012 the Village received an application from Michael and Kara Ohmstead, owners of the property located at 11638 Sheridan Road (Tax Parcel Number 93-4-123-311-0256) to amend the Village of Pleasant Prairie 2035 Comprehensive Plan 2035 Land Use Plan Map 9.9 and to rezone the property from B-1, Neighborhood Business to R-4 (UHO), Urban Single Family Residential District within an Urban Landholding Overlay District; and

WHEREAS, the existing single family home on the property located at 11638 Sheridan Road is considered a legal non-conforming use since a residential use is not an allowed use in the B-1 District. Being a non-conforming use, there are limitations as to the amount of structural alteration, addition or repair to this non-conforming use. With any non-conforming use, if the buildings are ever damaged or destroyed or the cumulative amount of structural alterations exceeds 50% of the assessed value (based on the value that the use became non-conforming) then the building would need to revert to a conforming commercial use.

WHEREAS, this area of Sheridan Road just south of 116th Street is a mixture of commercial land uses (Wooden Nickle, Ray Radigans and Ruffolo Pizza) and four (4) single family residential homes and the Land Use Plan indicates this area be ultimately development as Neighborhood Commercial pursuant to the B-1, Neighborhood Business Zoning District; and

WHEREAS, the Village staff has reviewed the Land Use Plan and the Zoning Map for this area and identified that the following three (3) additional single family homes are also classified as non-conforming uses:

Tax Parcel Number	Owner	Address
93-4-123-311-0230	Anna M. Stachura	11618 Sheridan Road
93-4-123-311-0240	Lawrence E. Draudt	11624 Sheridan Road
Part of 93-4-123-312-0266	Nafi & Awilda Kalan	11740 Sheridan Road

NOW THEREFORE, BE IT RESOLVED, by the Village Plan Commission, as follows:

1. That the Village Plan Commission hereby initiates and petitions to amend the 2035 Land Use Plan Map 9.9 to add an urban reserve land use designation over the four (4) noted properties (leaving the underlying Neighborhood Commercial land use designation; and to amend the Zoning Map to rezone the four (4) noted properties into the R-4 (UHO), Urban Single Family Residential District with an Urban Landholding Overlay District.

2. That the proposed amendments are hereby referred to the Village staff for further study and recommendation.

3. That the Village Plan Commission is not, by this Resolution, making any determination regarding the merits of the proposed changes in the Zoning Map, but rather, is only initiating the process by which the proposed changes in the Zoning Map can be promptly evaluated.

4. That the public participation plan for this rezoning as initiated by the property owner will be the required 30 day public notice and the required public hearing pursuant to Chapter 390 of the Village Municipal Code entitled, "Comprehensive Plan".

Adopted this 10th day of August 2015.

VILLAGE OF PLEASANT PRAIRIE

ATTEST:

_____
Thomas W. Terwall
Plan Commission Chairman

_____
Donald Hackbarth
Secretary

Date Posted: _____

16-Comp Plan Amendments--Sheridan Rd LU and Zoning Map Amend

General Location Map

KENOSHA COUNTY
INTERACTIVE MAPPING

N
S

1 inch = 200 feet
Date Printed: 7/30/2015

DISCLAIMER This map is neither a legally recorded map nor a survey and is not intended to be used as one. This drawing is a compilation of records, data and information located in various state, county and municipal offices and other sources affecting the area shown and is to be used for reference purposes only. Kenosha County is not responsible for any inaccuracies herein contained. If discrepancies are found, please contact Kenosha County.
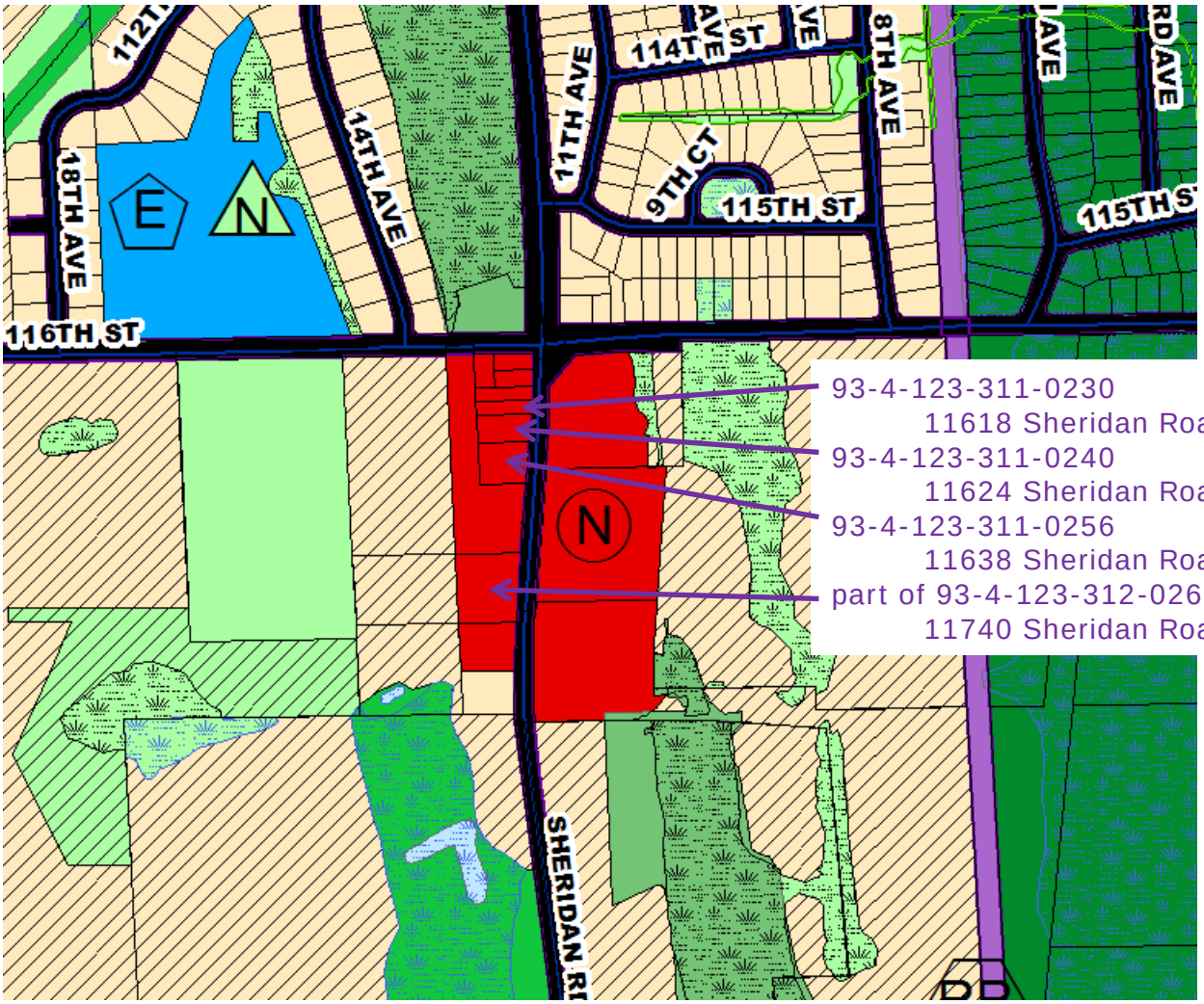
Portion of the Village 2035 Land Use Plan Map 9.9